HURCO

704-0212-303

VM1 Machining Center

Parts Listing and Wiring Diagrams Manual

December 2005 Revision A

# Parts Listing and Wiring Diagrams

## Hurco VM1 Machining Center

The information in this document is subject to change without notice and does not represent a commitment on the part of Hurco Companies, Inc. (Hurco). The software described in this document is furnished under the License Agreement to customers. It is against the law to copy the software on any medium except as specifically allowed in the license agreement. The purchaser may make copies of the software for backup purposes. No part of this document may be reproduced or transmitted in any form or by any means, electronic or mechanical, including photocopying, for any purpose without the express written permission of the Hurco machine tool owner.

Hurco Manufacturing Company reserves the right to incorporate any modification or improvements in machines and machine specifications which it considers necessary, and does not assume any obligation to make any said changes in machines or equipment previously sold.

Hurco products and services are subject to Hurco's then current prices, terms, and conditions, which are subject to change without notice.

© 2005 Hurco Companies, Inc. All rights reserved.

**Patents:** U.S. Patents B14,477,754; 5,453,933; Canadian Patent 1,102,434;
Japanese Patents 1,649,006 and 1,375,124; other Patents pending.

Hurco, Max, Ultimax, and WinMax are Registered Trademarks of Hurco Companies, Inc.

Conversational Probing, UltiDraw, UltiNet, UltiPocket and AutoSave are trademarks of Hurco Companies, Inc.

AutoCAD, Autodesk, and DXF are registered trademarks of Autodesk, Inc.

Fanuc is a registered trademark of Fanuc LTD.

IBM and PC/AT are registered trademarks of International Business Machines Corporation.

MS-DOS, Microsoft, and Windows are registered trademarks of Microsoft Corporation.

Many of the designations used by manufacturers and sellers to distinguish their products are claimed as trademarks. Hurco has listed here all trademarks of which it is aware. For more information about Hurco products and services, contact:

**Hurco Companies, Inc.**
One Technology Way
P.O. Box 68180
Indianapolis, IN 46268-0180
Tel (317) 293-5309 (products)
(317) 298-2635 (service)
Fax (317) 328-2812 (service)

For Hurco subsidiary contact information, go to Hurco's Web site:
***www.hurco.com***

# Table of Contents

## Parts Listing and Wiring Diagrams

Using This Manual . . . . . vii

## Mechanical Assembly Drawings

Ass'y., Machine, VM1, . . . . . .003-0100-001—Rev. G . . . . Page 1 - 2
Ass'y., Machine, VM, . . . . . .003-0100-002—Rev. G . . . . Page 1 - 2
Ass'y., Machine, VM1, . . . . . .003-0100-003—Rev. G . . . . Page 1 - 2
Ass'y., Machine, VM1X, . . . . . .003-0100-004—Rev. G . . . . Page 1 - 5
Ass'y., Machine, VM1X, . . . . . .003-0100-006—Rev. G . . . . Page 1 - 5
Ass'y., X Axis Way Cover, . . . . . .003-0101-001—Rev. A . . . . Page 1 - 8
Ass'y., Z-Axis Cover,. . . . . .003-0101-003—Rev. A . . . . Page 1 - 9
Ass'y., Pneumatic System,. . . . . .003-0101-006—Rev. A . . . . Page 1 - 11
Ass'y., Transformer, . . . . . .003-0101-007—Rev. A . . . . Page 1 - 12
Ass'y., Lubrication System, . . . . . .003-0101-010—Rev. B . . . . Page 1 - 13
Ass'y., Pendant, . . . . . .003-0101-011—Rev. B . . . . Page 1 - 14
Ass'y., Decal Location, . . . . . .003-0101-012—Rev. A . . . . Page 1 - 15
Ass'y., Warning and Instruction Labels and Location, . . . . . .003-0101-015—Rev. A . . . . Page 1 - 16
Ass'y., Warning and Instruction Labels and Location, . . . . . .003-0101-019—Rev. A . . . . Page 1 - 16
Ass'y., Y-Axis Way Cover, . . . . . .003-0101-020—Rev. A . . . . Page 1 - 17
Ass'y., Base, VM1, . . . . . .003-0102-001—Rev. A . . . . Page 1 - 19
Ass'y., Saddle, . . . . . .003-0102-002—Rev. A . . . . Page 1 - 20
Ass'y., Table, VM1, . . . . . .003-0102-003—Rev. B . . . . Page 1 - 22
Ass'y., 4th Interface (USA), . . . . . .003-0102-007—Rev. A . . . . Page 1 - 24
Ass'y., Head & Column, VM1,. . . . . .003-0102-008—Rev. A . . . . Page 1 - 25
Ass'y., Spindle Transmission, 8K, . . . . . .003-0103-001—Rev. C . . . . Page 1 - 27
Ass'y., Spindle Transmission, 10K, . . . . . .003-0103-002—Rev. D . . . . Page 1 - 28
Ass'y., Spindle, (8K), . . . . . .003-0103-003—Rev. C . . . . Page 1 - 30
Ass'y., Transmission, X Axis, . . . . . .003-0104-001—Rev. A . . . . Page 1 - 31
Ass'y., Transmission, Y Axis, . . . . . .003-0104-002—Rev. A . . . . Page 1 - 32
Ass'y., Transmission, Z-Axis, . . . . . .003-0104-004—Rev. B . . . . Page 1 - 33
Ass'y., Limit Switch & Dog, X Axis, . . . . . .003-0105-001—Rev. A . . . . Page 1 - 34
Ass'y., Limit Switch & Dog, Y Axis, . . . . . .003-0105-002—Rev. A . . . . Page 1 - 35
Ass'y., Limit Switch & Dog, Z Axis, . . . . . .003-0105-003—Rev. A . . . . Page 1 - 36
Ass'y., Overarm Console, Exploded, . . . . . .003-0105-005—Rev. C . . . . Page 1 - 37
Ass'y., Electrical Cabinet & Powertrak, . . .003-0105-010—Rev. A . . . . Page 1 - 38
Ass'y., Electrical Cabinet & Powertrak, . . .003-0105-011—Rev. A . . . . Page 1 - 39
Ass'y., Electrical Cabinet & Powertrak, . . .003-0105-012—Rev. A . . . . Page 1 - 40
Ass'y., Electrical Cabinet & Powertrak, . . .003-0105-014—Rev. A . . . . Page 1 - 41
Ass'y., Mounting, ATC, VM1, . . . . . .003-0106-001—Rev. A . . . . Page 1 - 42
Ass'y., CAT ATC 16T, . . . . . .003-0106-002—Rev. C . . . . Page 1 - 43
Ass'y., CAT Swing Arm,. . . . . .003-0106-003—Rev. B . . . . Page 1 - 44
Ass'y., BT ATC 16T, . . . . . .003-0106-005—Rev. C . . . . Page 1 - 45
Ass'y., BT Swing Arm,. . . . . .003-0106-006—Rev. A . . . . Page 1 - 48
Ass'y., Tool Holder,. . . . . .003-0106-008—Rev. A . . . . Page 1 - 49
Ass'y., Tool Holder Up/Down,. . . . . .003-0106-009—Rev. A . . . . Page 1 - 50
Ass'y., ATC Drive,. . . . . .003-0106-010—Rev. B . . . . Page 1 - 51
Ass'y., Enclosure, VM1, . . . . . .003-0107-001—Rev. A . . . . Page 1 - 52
Ass'y., Enclosure Door Switch, . . . . . .003-0107-002—Rev. C . . . . Page 1 - 54
Ass'y., Cylinder, Unclamp, . . . . . .003-1003-001—Rev. C . . . . Page 1 - 55
Ass'y., Spindle (10K), . . . . . .003-1015-027—Rev. C . . . . Page 1 - 56

## Electrical Cabinet and Control Drawings


Ass'y., Comm Port w/CDRom & USB Port, . 002-4421-012—Rev. A . . . . Page 2 - 2
Ass'y., Electrical Cabinet, VM1, Edit II, . . . 003-1007-048—Rev. F . . . . Page 2 - 3
Ass'y., Electrical Cabinet, VM1, Edit II, . . . 003-1007-049—Rev. F . . . . Page 2 - 3
Ass'y., Electrical Cabinet, VM1, Edit II, . . . 003-1007-050—Rev. F . . . . Page 2 - 3
Ass'y., Electrical Cabinet, VM1, Edit II, . . . 003-1007-059—Rev. F . . . . Page 2 - 3
Ass'y., Console, Max, . . . . . 007-0012-003—Rev. D . . . . Page 2 - 7
Ass'y., C/C, S7, SVGA, CNC++VT, 44 I/O, 007-3002-011—Rev. T . . . . Page 2 - 8
Ass'y., C/C, S7, DVGA, CNC++VT, 44 I/O, 007-3002-012—Rev. T . . . . Page 2 - 8
Ass'y., C/C, S370, SVGA, OCV 5 CH., 44 I/O, . . . . . 007-3002-030—Rev. T . . . . Page 2 - 8
Ass'y., C/C, S7, SVGA, XMP, 44 I/O, 3 I/0 Slots, . . . . . 007-3002-034—Rev. A . . . . Page 2 - 9
Ass'y., C/C, S7, DVGA, XMP, 44 I/O, 3 I/0 Slots, . . . . . 007-3002-035—Rev. A . . . . Page 2 - 9
Ass'y., C/C, S370, SVGA, XMP, 44 I/O, 3 I/0 Slots, . . . . . 007-3002-036—Rev. A . . . . Page 2 - 9
Ass'y., Dual TFT Flat Panel Console, . . . . . 007-3004-005—Rev. D . . . . Page 2 - 10
Control Kit, Max 4 TFT, . . . . . 007-3005-018—Rev. H . . . . Page 2 - 11
Kit, Max Control, . . . . . 007-3005-054—Rev. C . . . . Page 2 - 12
Kit, Max S370 OCV-5CH 44 IO ASF, . . . . . 007-3005-056—Rev. C . . . . Page 2 - 13
Control Kit, DSM, S7, SYNQNET, 1RMB, 44 I/O, . . . . . 007-3005-058—Rev. A . . . . Page 2 - 14
Control Kit, Max, S7, SYNQNET, 1RMB, 44 I/O, . . . . . 007-3005-059—Rev. A . . . . Page 2 - 15
Control Kit, Max, ASF, SYNQNET, 1RMB, 44 I/O, . . . . . 007-3005-061—Rev. A . . . . Page 2 - 16
Ass'y., Dual TFT Flat Panel Display, . . . . . 007-3015-002—Rev. D . . . . Page 2 - 17
Ass'y., Dual Flat Panel PEK, . . . . . 007-3016-001—Rev. C . . . . Page 2 - 20
Ass'y., Detented Jog, . . . . . 007-3017-001—Rev. D . . . . Page 2 - 21


## Electrical and Mechanical Schematics


Schematic, Coolant, . . . . . 003-0101-016—Rev. A . . . . Page 3 - 2
Schematic, Pneumatic, . . . . . 003-0101-017—Rev. A . . . . Page 3 - 3
Schematic, Lubrication, VM 1, . . . . . 003-0101-018—Rev. A . . . . Page 3 - 4
Schematics, VM1, VM2, VM3, VM1G, . . . . 003-2022-011—Rev. K . . . . Page 3 - 5


## Harness Assembly Drawings


Ass'y., Max Control I/F Harness, . . . . . 002-4403-038—Rev. D . . . . Page 4 - 3
Ass'y., 105" ISA CNC/Console Harness, . . 002-4403-039—Rev. C . . . . Page 4 - 4
Harness, ISA/DSP TTL I/O, . . . . . 423-4400-002—Rev. B . . . . Page 4 - 5
Harness, ISA/DSP Servo I/O, . . . . . 423-4400-006—Rev. B . . . . Page 4 - 6
Harness, LCD Power, FPN PCB, . . . . . 423-4401-172—Rev. A . . . . Page 4 - 7
Harness, Machine Function to FPN/J7, . . . . 423-4401-173—Rev. B . . . . Page 4 - 8
Harness, Floppy Drive Signal, . . . . . 423-4401-174—Rev. A . . . . Page 4 - 9
Harness, Trackball, . . . . . 423-4401-175—Rev. B . . . . Page 4 - 10
Harness, FDD Power, . . . . . 423-4401-176—Rev. B . . . . Page 4 - 11
Harness, Program Entry Keyboard, . . . . . 423-4401-177—Rev. B . . . . Page 4 - 12
Harness, E-Stop, Console, . . . . . 423-4401-178—Rev. D . . . . Page 4 - 13
Harness, E-Stop 2", . . . . . 423-4401-179—Rev. C . . . . Page 4 - 14
Harness, Max4 Remote Jog, . . . . . 423-4401-180—Rev. G . . . . Page 4 - 15
Harness, CPI to FPN, . . . . . 423-4401-186—Rev. A . . . . Page 4 - 17
Harness, IOIF J2, . . . . . 423-4401-240—Rev. A . . . . Page 4 - 18
Harness, FDD Signal, 650MM, . . . . . 423-4401-721—Rev. A . . . . Page 4 - 19
Harness, FDD Power, 550MM, . . . . . 423-4401-722—Rev. A . . . . Page 4 - 20
Harness, FPD Power, 60MM, . . . . . 423-4401-723—Rev. A . . . . Page 4 - 21
Harness, Program Entry, 425MM, . . . . . 423-4401-724—Rev. A . . . . Page 4 - 22
Harness, Console Jog, 475MM, . . . . . 423-4401-725—Rev. A . . . . Page 4 - 23
Harness, Machine Function to FPN, 685MM, 423-4401-726—Rev. A . . . . Page 4 - 24
Harness, Touchscreen Extension, 135MM, . 423-4401-727—Rev. A . . . . Page 4 - 25
Harness, Pushbutton Interconnect, Max, . . 423-4401-728—Rev. A . . . . Page 4 - 26

## Harness Assembly Drawings, Continued


Harness, DCIO J1, VM1, . . . . . .423-4401-729—Rev. A . . . . Page 4 - 27
Harness, DCIO J2, VM1, . . . . . .423-4401-730—Rev. A . . . . Page 4 - 28
Harness, IOIF J1, VM1, . . . . . .423-4401-731—Rev. A . . . . Page 4 - 29
Harness, Detented Jog E-Stop Bypass, . . .423-4401-732—Rev. A . . . . Page 4 - 30
Harness, Door Interlock, . . . . . .423-4401-733—Rev. A . . . . Page 4 - 31
Harness, Air Relief Solenoid, . . . . . .423-4401-734—Rev. A . . . . Page 4 - 32
Harness, ATC CW/CCW Motor Power, . . . .423-4401-735—Rev. B . . . . Page 4 - 33
Harness, Disk ATC, . . . . . .423-4401-736—Rev. A . . . . Page 4 - 34
Harness, DC Power, . . . . . .423-4401-737—Rev. A . . . . Page 4 - 35
Harness, Spindle Motor Fan, . . . . . .423-4401-738—Rev. A . . . . Page 4 - 36
Harness, Lube, . . . . . .423-4401-739—Rev. A . . . . Page 4 - 37
Harness, IEC FEM Power, . . . . . .423-4401-740—Rev. A . . . . Page 4 - 38
Harness, Air Pressure, . . . . . .423-4401-741—Rev. A . . . . Page 4 - 39
Harness, Spindle Head Fan, . . . . . .423-4401-749—Rev. A . . . . Page 4 - 40
Harness, Auger Control, Prepare, . . . . . .423-4401-750—Rev. B . . . . Page 4 - 41
Harness, Flood Control, Prepare, . . . . . .423-4401-751—Rev. B . . . . Page 4 - 42
Harness, Transformer 230V Primary, . . . .423-4401-752—Rev. A . . . . Page 4 - 43
Harness, Axis Limit Switch VM1, . . . . . .423-4401-753—Rev. A . . . . Page 4 - 44
Harness, Axis Limit Switch VM1, . . . . . .423-4401-754—Rev. A . . . . Page 4 - 44
Harness, Axis Limit Switch VM1, . . . . . .423-4401-755—Rev. A . . . . Page 4 - 44
Harness, X Y Z Axis, 1CN to MX4/TB1, . . .423-4401-756—Rev. A . . . . Page 4 - 45
Harness, X Y Z Axis, 1CN to MX4/TB1, . . .423-4401-757—Rev. A . . . . Page 4 - 45
Harness, X Y Z Axis, 1CN to MX4/TB1, . . .423-4401-758—Rev. A . . . . Page 4 - 45
Harness, Spindle Motor Encoder, . . . . . .423-4401-759—Rev. A . . . . Page 4 - 46
Harness, X, Y Axis Motor Encoder, . . . . . .423-4401-760—Rev. A . . . . Page 4 - 47
Harness, X, Y Axis Motor Encoder, . . . . . .423-4401-761—Rev. A . . . . Page 4 - 47
Harness, Z Axis Motor Encoder, . . . . . .423-4401-762—Rev. B . . . . Page 4 - 48
Harness, Main Disconnect, . . . . . .423-4401-763—Rev. A . . . . Page 4 - 49
Harness, X, Y Axis Motor Power VM1, . . . .423-4401-764—Rev. B . . . . Page 4 - 50
Harness, X, Y Axis Motor Power VM1, . . . .423-4401-765—Rev. B . . . . Page 4 - 50
Harness, Spindle Motor Power, . . . . . .423-4401-767—Rev. A . . . . Page 4 - 51
Harness, Max4 to Spindle Drive, . . . . . .423-4401-768—Rev. B . . . . Page 4 - 52
Harness, TR1 Main Power, . . . . . .423-4401-791—Rev. B . . . . Page 4 - 53
Harness, Console Jog E-Stop Bypass, 4 Pin, . . . . . .423-4401-793—Rev. A . . . . Page 4 - 54
Harness, Worklight Receptacle, 110V, . . . .423-4401-822—Rev. B . . . . Page 4 - 55
Harness, Z-Axis Motor Power, VM1, . . . . .423-4401-865—Rev. B . . . . Page 4 - 56
Harness, Z-Axis, 1CN to MX4/TB1, . . . . . .423-4401-866—Rev. A . . . . Page 4 - 57
Harness, Spindle Head SWS, . . . . . .423-4401-955—Rev. A . . . . Page 4 - 58
Harness, Oil Chiller Interface, . . . . . .423-4401-984—Rev. B . . . . Page 4 - 59
Harness, Dual DC Power, . . . . . .423-4401-993—Rev. A . . . . Page 4 - 60
Harness, RMB, IOIF J2, . . . . . .423-4401-996—Rev. A . . . . Page 4 - 61
Harness, Spindle I/O Signal, . . . . . .423-4401-997—Rev. A . . . . Page 4 - 62
Harness, Axis Motor Encoder VMX 24/30, .423-4405-111—Rev. C . . . . Page 4 - 63
Harness, Spindle Head I/O Signal, . . . . . .423-4405-259—Rev. A . . . . Page 4 - 64
Harness, Unclamp/Purge/BLR Sol, . . . . . .423-4405-260—Rev. A . . . . Page 4 - 65

## Options

### Rotary Table Option


Kit, Rotary Table Harnesses, Sigma II, VM1,002-4303-012—Rev. A . . . Page 5 - 2

Harness, ISA/DSP TTL I/O, . . . . . .423-4400-002—Rev. B . . . . Page 5 - 3

Harness, ISA/DSP Servo I/O, . . . . . .423-4400-006—Rev. B . . . . Page 5 - 4

Harness, ISA/DSP Sync, . . . . . .423-4400-011—Rev. B . . . . Page 5 - 5

Harness, Rotary Encoder, 90 Degree, Sigma II, VM1, . . .423-4401-922—Rev. B . . . . Page 5 - 6

Harness, Rotary Motor, 90 Degree, Sigma II, VM1, . . .423-4401-923—Rev. B . . . . Page 5 - 7

Harness, A-Axis, 1CN to MX4/TB1, .423-4401-933—Rev. C . . . . Page 5 - 8

Harness, IOIF J3, Sigma II, . . . . . .423-4401-934—Rev. B . . . . Page 5 - 9

Ass'y., 4th Axis Interface, (EUR),. . . . . .003-0102-009—Rev. A . . . . Page 5 - 10

Schematics, Electrical, Rotary Table, . . . .003-2022-019—Rev. C . . . . Page 5 - 11


### Probing Option


Schematic, Renishaw Probes—Mach. Cntrs w/Siemens Spindle Systems, . . . .007-3022-008—Rev. B . . . . Page 5 - 19

Schematic, Renishaw Probes—Mach. Cntrs w/Yaskawa Sigma Drives,. . . . . .007-3022-017—Rev. B . . . . Page 5 - 20

Schematic, Renishaw Laser Part Probe—Mach. Cntrs w/Yaskawa Sigma Drives,. . . . . .007-3022-018—Rev. B . . . . Page 5 - 21

Schematic, Blum Laser Part Probe—Mach. Cntrs w/Yaskawa Sigma Drives,. . . . . .007-3022-019—Rev. A . . . . Page 5 - 22

Schematic, Renishaw Probes—Mach. Cntrs (Pre-Sigma Drives), . . . . . .007-3022-020—Rev. A . . . . Page 5 - 23

Schematic, Renishaw Laser Part Probe—Mach. Cntrs (Pre-Sigma) Drives, . . . . . .007-3022-021—Rev. B . . . . Page 5 - 24

Schematic, Blum Laser Part Probe—Mach. Cntrs (Pre-Sigma) Drives, . . . . . .007-3022-022—Rev. A . . . . Page 5 - 25


### Other Options


Ass'y., Clear Dome, . . . . . .003-0101-004—Rev. D . . . . Page 5 - 26

Ass'y., Top Hood, Clear Plastic Dome, DSM,003-0101-005—Rev. B . . . . Page 5 - 27

Ass'y., Air Gun, Option,. . . . . .003-0101-008—Rev. C . . . . Page 5 - 28

Ass'y., Kit, CE Retrofit, . . . . . .003-0101-021—Rev. C . . . . Page 5 - 29

Ass'y., Chip Removal, Option, . . . . . .003-0102-005—Rev. C . . . . Page 5 - 31

Ass'y., 4th Axis Interface (EUR), . . . . . .003-0102-009—Rev. A . . . . Page 5 - 32

Ass'y., 4th Axis Interface, . . . . . .003-0102-013—Rev. A . . . . Page 5 - 33

Ass'y., BT Swing Arm,. . . . . .003-0106-006—Rev. A . . . . Page 5 - 34

Ass'y., Flood Coolant, Option, . . . . . .003-0108-001—Rev. E . . . . Page 5 - 35

Ass'y., 10K Spindle, Pulleys & Encoder,. . .003-0108-002—Rev. C . . . . Page 5 - 37

Ass'y., Worklamp, Option,. . . . . .003-0108-004—Rev. B . . . . Page 5 - 38

Ass'y., Left Worklight, Option, VM2, . . . . .003-0208-006—Rev. A . . . . Page 5 - 39

Kit, Option, Keyboard, Max,. . . . . .007-0020-007—Rev. B . . . . Page 5 - 40

Kit, Option, Remote Jog, Max, . . . . . .007-0020-008—Rev. C . . . . Page 5 - 41

Ass'y., PCI/ISA P/B SOC370 128M CPU, . .007-3003-009—Rev. C . . . . Page 5 - 42

Ass'y., Auger Utility Box,. . . . . .410-2001-054—Rev. A . . . . Page 5 - 43

Ass'y., Flood Utility Box, . . . . . .410-2001-055—Rev. B . . . . Page 5 - 44

Cart, Chip,. . . . . .803-0121-010—Rev. A . . . . Page 5 - 45

Mat, Machine Front Floor, . . . . . .803-1036-013—Rev. C . . . . Page 5 - 46

Record of Changes—VM1 Machining Center . . . . . 1

Part Number Index . . . . . IX - 1

# Using This Manual

## Printing

Select **File / Print** to print this document. Be sure to review the **Print Range** selections and make the appropriate choice for pages. Select **Properties / Paper / Quality** and adjust the **Tray Selection / Paper Source** if necessary.

## Table of Contents Icon

When viewing this file on your PC, click this icon on the cover page to display the Table of Contents.

## Drawings

The parts displayed in this manual were developed to meet specific production requirements. The use of any non-recommended replacement parts may damage the machine or reduce production quality. Hurco has an ongoing program to further improve existing parts. Many of these improvements cannot be detected by visual examination (comparing old and new parts). For these reasons, it is extremely important that only recommended replacement parts be used.

The part drawings can also be used as an aid in isolating a malfunction if it becomes necessary to troubleshoot the machine to find the source of an encountered problem.

## Proprietary Information

Information contained herein is the property of Hurco Companies, Inc. No reproduction or disclosure of this information shall be made by the recipient to any other person or organization without the prior written consent of Hurco Companies, Inc.

## Notice

Hurco products should be used only for the purpose and in the manner intended by their original design. It is recommended that no modifications be made to this product. Any modifications of this product will void any expressed or implied warranty.

## Safety Precautions

Service Personnel: Always be alert and practice all necessary safety rules and precautions when servicing this equipment. Always observe the following safety precautions:

- **Always** disconnect the power source before attempting maintenance on or servicing the machine.
- **Always** turn the main disconnect switch to the OFF position before removing or servicing any circuit boards, switches, fuses, cables, and components within the Power and/or CNC control cabinets.
- **Post a warning** on or near the disconnect switch telling others not to turn ON the power to the machine whenever working in an area away from the switch.
- If it becomes necessary to make any tests or checks with live circuits, be extremely careful and follow all established safety practices. Remember, the line side of the disconnect switch may be hot even though the switch is in the OFF position.

  **Always** wear the static control wrist strap when working inside the CNC control cabinet. Avoid flexing the printed circuit boards (PCBs, also called printed wiring boards or PWBs) whenever they are handled, or removed, or inserted in the machine. Hairline cracks in the printed circuit etching may result from rough handling, causing problems that are often intermittent and difficult to find.

  Avoid touching the components (devices) installed on a printed circuit board because they may become damaged by static electricity.

## How to Order Replacement Parts

This manual was developed to aid in identifying and purchasing Hurco machine parts. Use the part number and description specified on the part drawing when ordering replacement parts. To locate a part number:

1. Identify the assembly from the list below that contains the component part.
2. Go to the drawing number that illustrates the assembly breakdown.
3 Locate the component part on the illustration and note its corresponding part number and description.

Hurco maintains a large inventory of service parts. You may order parts from Hurco by telephone, fax, mail, or from your local Hurco Distributor. Contact information is provided during the installation. In addition, Hurco subsidiary contact information can be found on the Hurco Web site:

**www.hurco.com**

## Information Required for Parts Orders

In order for Hurco to process your order and supply you with the correct part(s), you must provide the detailed information described below:

- Your company's purchase order number.
- **Serial Number** index of the Hurco machine. The machine serial number is located on the identification/data plate, which is attached to the electrical cabinet door.
- The part number, part name (description) and quantity desired. State where you found the part number. If you found the part number in a manual, include the manual's part number, revision or date, and page.
- Your company's name and complete address.
- Name and telephone number of person ordering the parts.
- Complete shipping address for the parts, including name of the person to ship to, delivery date, and department.
- Provide any special shipping instructions, including mode of shipment. Parts will be shipped prepaid and billed via invoice.
- Indicate the condition of the machine (inoperable or functional, etc.).
- Address to which invoices are to be mailed.

## Returning Parts

When returning a part to Hurco, fill out a Return Authorization Tag and ship the part in its original container. All parts are subject to inspection before credit is issued.Hurco will not accept parts shipped without a Return Authorization Number displayed clearly on the outside of the shipping container.

⇨ After you contact either your full service dealer or Hurco, they will provide you with a Return Authorization Tag that includes the Return Authorization Number for you to display on the shipping container.

All defective parts replaced under warranty agreement must be returned within 30 days.

# Mechanical Assembly Drawings

## Hurco VM1 Machining Center


Ass'y., Machine, VM1, . . . . . .003-0100-001—Rev. G . . . . Page 1 - 2
Ass'y., Machine, VM1, . . . . . .003-0100-002—Rev. G . . . . Page 1 - 2
Ass'y., Machine, VM1, . . . . . .003-0100-003—Rev. G . . . . Page 1 - 2
Ass'y., Machine, VM1X, . . . . . .003-0100-004—Rev. G . . . . Page 1 - 5
Ass'y., Machine, VM1X, . . . . . .003-0100-006—Rev. G . . . . Page 1 - 5
Ass'y., X Axis Way Cover, . . . . . .003-0101-001—Rev. A . . . . Page 1 - 8
Ass'y., Z-Axis Cover,. . . . . .003-0101-003—Rev. A . . . . Page 1 - 9
Ass'y., Pneumatic System,. . . . . .003-0101-006—Rev. A . . . . Page 1 - 11
Ass'y., Transformer, . . . . . .003-0101-007—Rev. A . . . . Page 1 - 12
Ass'y., Lubrication System, . . . . . .003-0101-010—Rev. B . . . . Page 1 - 13
Ass'y., Pendant, . . . . . .003-0101-011—Rev. B . . . . Page 1 - 14
Ass'y., Decal Location, . . . . . .003-0101-012—Rev. A . . . . Page 1 - 15
Ass'y., Warning and Instruction Labels and Location, . . . . . .003-0101-015—Rev. A . . . . Page 1 - 16
Ass'y., Warning and Instruction Labels and Location, . . . . . .003-0101-019—Rev. A . . . . Page 1 - 16
Ass'y., Y-Axis Way Cover, . . . . . .003-0101-020—Rev. A . . . . Page 1 - 17
Ass'y., Base, VM1, . . . . . .003-0102-001—Rev. A . . . . Page 1 - 19
Ass'y., Saddle, . . . . . .003-0102-002—Rev. A . . . . Page 1 - 20
Ass'y., Table, VM1, . . . . . .003-0102-003—Rev. B . . . . Page 1 - 22
Ass'y., 4th Interface (USA), . . . . . .003-0102-007—Rev. A . . . . Page 1 - 24
Ass'y., Head & Column, VM1, . . . . . .003-0102-008—Rev. A . . . . Page 1 - 25
Ass'y., Spindle Transmission, 8K, . . . . . .003-0103-001—Rev. C . . . . Page 1 - 27
Ass'y., Spindle Transmission, 10K, . . . . . .003-0103-002—Rev. D . . . . Page 1 - 28
Ass'y., Spindle, (8K), . . . . . .003-0103-003—Rev. C . . . . Page 1 - 30
Ass'y., Transmission, X Axis, . . . . . .003-0104-001—Rev. A . . . . Page 1 - 31
Ass'y., Transmission, Y Axis, . . . . . .003-0104-002—Rev. A . . . . Page 1 - 32
Ass'y., Transmission, Z-Axis, . . . . . .003-0104-004—Rev. B . . . . Page 1 - 33
Ass'y., Limit Switch & Dog, X Axis, . . . . . .003-0105-001—Rev. A . . . . Page 1 - 34
Ass'y., Limit Switch & Dog, Y Axis, . . . . . .003-0105-002—Rev. A . . . . Page 1 - 35
Ass'y., Limit Switch & Dog, Z Axis, . . . . . .003-0105-003—Rev. A . . . . Page 1 - 36
Ass'y., Overarm Console, Exploded, . . . . . .003-0105-005—Rev. C . . . . Page 1 - 37
Ass'y., Electrical Cabinet & Powertrak, . . . .003-0105-010—Rev. A . . . . Page 1 - 38
Ass'y., Electrical Cabinet & Powertrak, . . . .003-0105-011—Rev. A . . . . Page 1 - 39
Ass'y., Electrical Cabinet & Powertrak, . . . .003-0105-012—Rev. A . . . . Page 1 - 40
Ass'y., Electrical Cabinet & Powertrak, . . . .003-0105-014—Rev. A . . . . Page 1 - 41
Ass'y., Mounting, ATC, VM1, . . . . . .003-0106-001—Rev. A . . . . Page 1 - 42
Ass'y., CAT ATC 16T, . . . . . .003-0106-002—Rev. C . . . . Page 1 - 43
Ass'y., CAT Swing Arm,. . . . . .003-0106-003—Rev. B . . . . Page 1 - 44
Ass'y., BT ATC 16T, . . . . . .003-0106-005—Rev. C . . . . Page 1 - 45
Ass'y., BT Swing Arm,. . . . . .003-0106-006—Rev. A . . . . Page 1 - 48
Ass'y., Tool Holder,. . . . . .003-0106-008—Rev. A . . . . Page 1 - 49
Ass'y., Tool Holder Up/Down,. . . . . .003-0106-009—Rev. A . . . . Page 1 - 50
Ass'y., ATC Drive,. . . . . .003-0106-010—Rev. B . . . . Page 1 - 51
Ass'y., Enclosure, VM1, . . . . . .003-0107-001—Rev. A . . . . Page 1 - 52
Ass'y., Enclosure Door Switch, . . . . . .003-0107-002—Rev. C . . . . Page 1 - 54
Ass'y., Cylinder, Unclamp, . . . . . .003-1003-001—Rev. C . . . . Page 1 - 55
Ass'y., Spindle (10K), . . . . . .003-1015-027—Rev. C . . . . Page 1 - 56

| SIZE | DRAWING | SHT. | REV. | PROPRIETARY INFORMATION |
|---|---|---|---|---|
| D | 003-0100- 001 002 003 | 1 OF 3 | G | INFORMATION CONTAINED HEREIN IS THE PROPERTY OF HURCO COMPANIES, INC. NO REPRODUCTION OR DISCLOSURE OF THIS INFORMATION SHALL BE MADE BY THE RECIPIENT TO ANY OTHER PERSON OR ORGANIZATION WITHOUT THE PRIOR WRITTEN CONSENT OF HURCO COMPANIES, INC. |

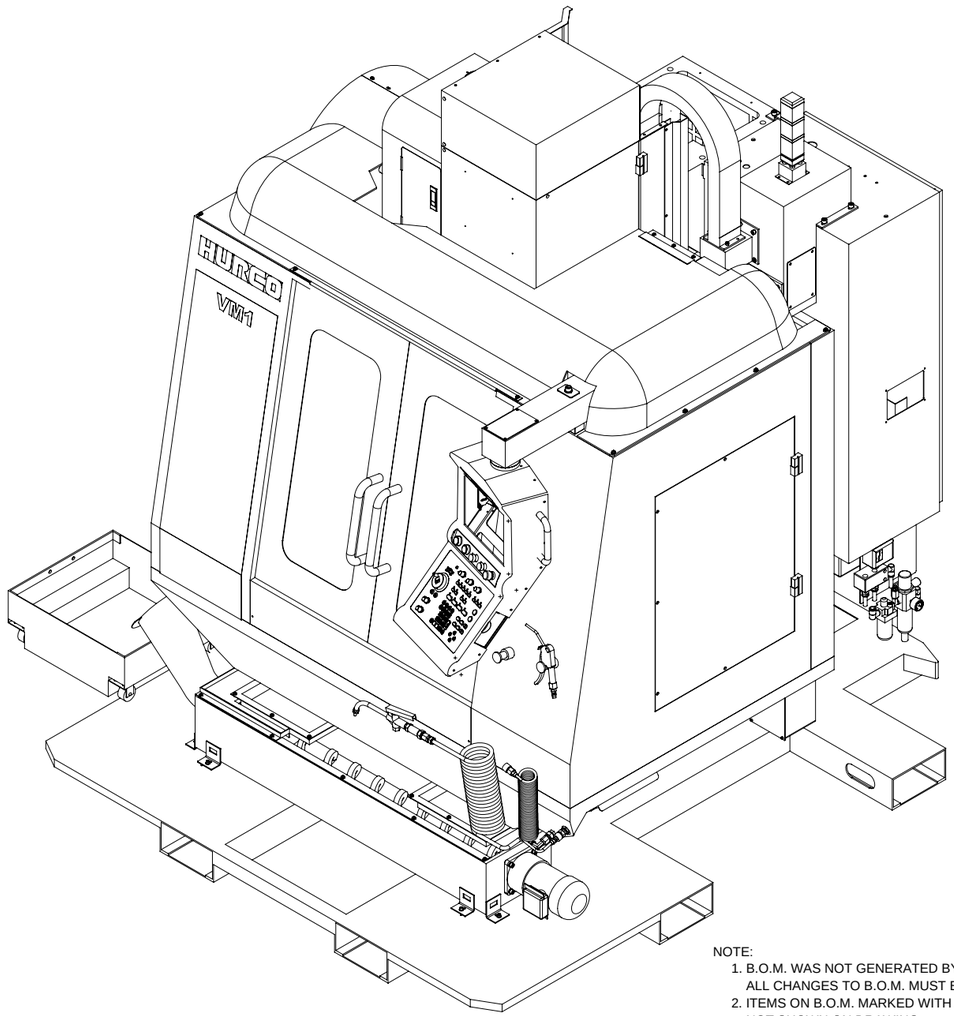


NOTE:
1. B.O.M. WAS NOT GENERATED BY SOLID MODEL. ALL CHANGES TO B.O.M. MUST BE DONE MANUALLY.
2. ITEMS ON B.O.M. MARKED WITH ASTERISK ( * ) ARE NOT SHOWN ON DRAWING.

| | USA -001 QTY. | ASIA -002 QTY. | NETH -003 QTY. | PART NUMBER | DESCRIPTION | ITEM |
|---|---|---|---|---|---|---|
| G3 E7 | | | | | | 43 |
| G4 E2 | - | - | 1 | 003-0102-013 | ASS'Y, 4TH AXIS INTERFACE | 42 |
| G2 F * | 1 | 1 | - | 003-0102-007 | ASS'Y, 4TH AXIS INTERFACE | 41 |
| | - | - | 1 | 003-0101-004 | ASS'Y, DOME, CLEAR | 40 |
| | - | 1 | - | 003-0102-005 | ASS'Y, CHIP REMOVAL WITH CHIP CART | 39 |
| | 1 | 1 | 1 | 003-0103-003 | ASS'Y, SPINDLE, 8K | 38 |
| * | 1 | 1 | 1 | 002-4101-157 | KIT, INVERTER | 37 |
| | 1 | 1 | 1 | 002-4101-156 | KIT, AC DRIVES | 36 |
| | 1 | 1 | 1 | 007-3005-054 | KIT, MAX CONTROL, VM1 | 35 |
| * | 1 | 1 | 1 | 003-1021-039 | ASS'Y, MANUALS, VM1 | 34 |
| * | 1 | 1 | 1 | 003-0108-007 | ASS'Y, INSTALL KIT | 33 |
| * | 1 | 1 | 1 | 003-0101-018 | SCHEMATIC, LUBRICATION | 32 |
| * | 1 | 1 | 1 | 003-0101-016 | SCHEMATIC, COOLANT | 31 |
| * | 1 | 1 | 1 | 003-0101-017 | SCHEMATIC, PNEUMATIC | 30 |
| * | - | - | 1 | 003-0101-015 | ASS'Y, WARNING LABEL LOCATION, CE | 29 |
| * | 1 | 1 | - | 003-0101-019 | ASS'Y, WARNING LABEL LOCATION | 29 |
| | 1 | 1 | 1 | 003-0101-012 | ASS'Y, DECAL LOCATION, VM1 | 28 |
| | - | 1 | 1 | 003-0101-008 | ASS'Y, AIR GUN | 27 |
| | 1 | 1 | 1 | 003-0101-006 | ASS'Y, PNEUMATIC SYSTEM | 26 |
| | 1 | 1 | 1 | 003-0101-013 | ASS'Y, MACHINE SHIPPING, MAX | 25 |
| | 1 | 1 | 1 | 003-0101-010 | ASS'Y, LUBRICATION SYSTEM | 24 |
| | - | 1 | 1 | 003-0108-004 | ASS'Y, WORKLIGHT | 23 |
| | 1 | 1 | 1 | 003-0105-005 | ASS'Y, OVERARM CONSOLE | 22 |
| | - | 1 | 1 | 003-0101-007 | ASS'Y, MOUNTING, TRANSFORMER | 21 |
| E6 | - | - | 1 | 003-0105-011 | ASS'Y, ELECT. CABINET & POWERTRAK, CE | 20 |
| E5 | 1 | 1 | - | 003-0105-010 | ASS'Y, ELECT. CABINET & POWERTRAK, NON-CE | 20 |
| | - | 1 | - | 003-0106-005 | ASS'Y, AUTOMATIC TOOL CHANGER, BT40 | 19 |
| | 1 | - | 1 | 003-0106-002 | ASS'Y, AUTOMATIC TOOL CHANGER, CAT40 | 19 |
| | 1 | 1 | 1 | 003-0106-001 | ASS'Y, ATC MOUNTING | 18 |
| | - | 1 | 1 | 003-0108-001 | ASS'Y, FLOOD COOLANT, NOZZLE, 50Hz/60Hz | 17 |
| | - | - | 1 | 003-0107-002 | ASS'Y, ENCLOSURE DOOR SWITCH | 16 |
| | 1 | 1 | 1 | 003-0107-001 | ASS'Y, ENCLOSURE | 15 |
| | 1 | 1 | 1 | 003-0105-003 | ASS'Y, Z-AXIS LIMIT SWITCH & DOG | 14 |
| | 1 | 1 | 1 | 003-0105-002 | ASS'Y, Y-AXIS LIMIT SWITCH & DOG | 13 |
| | 1 | 1 | 1 | 003-0105-001 | ASS'Y, X-AXIS LIMIT SWITCH & DOG | 12 |
| E4 | 1 | 1 | 1 | 003-0104-004 | ASS'Y, Z-AXIS TRANSMISSION | 11 |
| | 1 | 1 | 1 | 003-0104-002 | ASS'Y, Y-AXIS TRANSMISSION | 10 |
| | 1 | 1 | 1 | 003-0104-001 | ASS'Y, X-AXIS TRANSMISSION | 9 |
| | 1 | 1 | 1 | 003-0103-001 | ASS'Y, SPINDLE TRANSMISSION | 8 |
| | 1 | 1 | 1 | 003-0101-003 | ASS'Y, Z-AXIS WAY COVER | 7 |
| G1 | 1 | 1 | 1 | 003-0101-020 | ASS'Y, Y-AXIS WAY COVER | 6 |
| | 1 | 1 | 1 | 003-0101-001 | ASS'Y, X-AXIS WAY COVER | 5 |
| E3 | 1 | 1 | 1 | 003-0102-008 | ASS'Y, HEAD & COLUMN | 4 |
| | 1 | 1 | 1 | 003-0102-003 | ASS'Y, TABLE | 3 |
| | 1 | 1 | 1 | 003-0102-002 | ASS'Y, SADDLE | 2 |
| | 1 | 1 | 1 | 003-0102-001 | ASS'Y, BASE | 1 |

| REV | E.C.N. NO. | REVISION DESCRIPTION | REV BY | DATE | CHK BY | DATE | APPD BY | DATE |
|---|---|---|---|---|---|---|---|---|
| G | 15826 | 1) WAS 003-0101-002 [ALL], 2) DEL. 003-0102-007 [-003NETH] 3) DEL. 003-0208-006 [-002ASIA,-003NETH], 4) ADDED 003-0102-013 [-003NETH] | SMc | 2-24 2005 | PFB | 2-24 2005 | PFB | 2-24 2005 |
| F | 15761 | WAS 003-0102-006 ON -003, & ADDED TO 001 & 002 | SJT | 8-20 2004 | DEO | 8-20 2004 | PFB | 8-20 2004 |

| REV | E.C.N. NO. | REVISION DESCRIPTION | REV BY | DATE | CHK BY | DATE | APPD BY | DATE |
|---|---|---|---|---|---|---|---|---|
| E | 15710 | ALL BALLOONS RE-NUMBERED 003-0104-003, (5) WAS 003-0105-007, (6) WAS 003-0105-008, (7)ADDED ITEM 43 | GLH | 7 23 03 | PFB | 7 23 03 | | |
| E | 15710 | (2)DELETED 003-0102-007 QTY1 FROM -001 & -002, (3) WAS 003-0102-004, (4) WAS (1) REDRAWN TO SOLIDWORKS, VM1 & VMX1 NOW ON SEPARATE DRAWINGS, | GLH | 7 23 03 | PFB | 7 23 03 | | |
| D | 15582 | (6) -003 WAS 003-1007-046 QTY. 1, (7) -004, -005, & -006 WAS 003-1007-047 QTY. 1 | GLH | 7 24 03 | PFB | 8 24 03 | PFB | 8 31 03 |
| D | 15582 | 49 TO -004 & -005, (4) ADDED 003-0105-013, (5) -001 & -002 WAS 003-1007-045 QTY. 1, (1) -001/-002/-004 & -005 WAS QTY. 1, (2) ADDED (EUR) TO DESCRIPTION, (3) ADDED ITEM | GLH | 7 24 03 | PFB | 8 24 03 | PFB | 8 31 03 |
| C | 15517 | 46, 47 & 48 ADDED (1) ADD QTY 1 ON -002, -003, (2) DEL. QTY. 1 ON -006, (3) ADD QTY 1 ON -002, (4) ITEMS | JLW | 10 10 02 | PFB | 10 10 02 | PFB | 10 10 02 |
| B | 15499 | ITEM 45 ON THE VMX1 MODELS (5) REMOVED 003-0101-014 FROM THE VM1 MACHINES, (6) ADDED ITEM 44, (7) ADDED | PFB | 8 17 02 | PFB | 8 17 02 | PFB | 8 17 02 |
| B | 15499 | (3) ADDED 003-0101-012 TO THE VM1 MACHINES, (4) ADDED ITEM #31 003-0101-019, (1)REMOVED 003-0106-002 FROM -005, (2)ADDED 003-0101-013 TO THE VM5 MACHINES, | PFB | 8 17 02 | PFB | 8 17 02 | PFB | 8 17 02 |
| A | 15487 | ORIGINAL RELEASE | PFB | 8 13 02 | PFB | 8 13 01 | PFB | 8 13 02 |

SURFACE TREATMENT: NONE
HEAT TREATMENT: NONE
FIRST USED ON: VM1

EXCEPT AS NOTED: ALL CORNERS MUST BE AS FOLLOWS
INSIDE: 1.3 X 45° OR 1.3 R MAX
OUTSIDE: 0.8 X 45° OR 1.3 R

EXCEPT AS NOTED: WELDING TOLERANCE MUST BE AS FOLLOWS
±3°

EXCEPT AS NOTED: ALL DIMENSIONS IN METRIC TOLERANCE
DECIMAL: .0 ±0.8; .00 ±0.4; .000 ±0.13; .0000 ±0.013; ANGULAR ±5°30'

HURCO

HURCO COMPANIES, INC.
INDIANAPOLIS, IN U.S.A.

DESCRIPTION: ASS'Y, MACHINE, VM1

| DRAWN | DATE | CHECKED | DATE | APPROVED | DATE |
|---|---|---|---|---|---|
| PFB | 6/12/2002 | PFB | 6/12/2002 | PFB | 6/13/2002 |

| SCALE | SIZE | DRAWING | SHT. | REV. |
|---|---|---|---|---|
| 1:8 | D | 003-0100- 001 002 003 | 1 OF 3 | G |

UNIT OF MEAS.: PC

# Ass'y., Machine, VM1, 003-0100-001, 003-0100-002, 003-0100-003—Rev. G

| SIZE | DRAWING | | SHT. | REV. |
|---|---|---|---|---|
| D | 003-0100- | 001<br>002<br>003 | 2<br>OF<br>3 | G |

PROPRIETARY INFORMATION

INFORMATION CONTAINED HEREIN IS THE PROPERTY OF HURCO COMPANIES, INC. NO REPRODUCTION OR DISCLOSURE OF THIS INFORMATION SHALL BE MADE BY THE RECIPIENT TO ANY OTHER PERSON OR ORGANIZATION WITHOUT THE PRIOR WRITTEN CONSENT OF HURCO COMPANIES, INC.

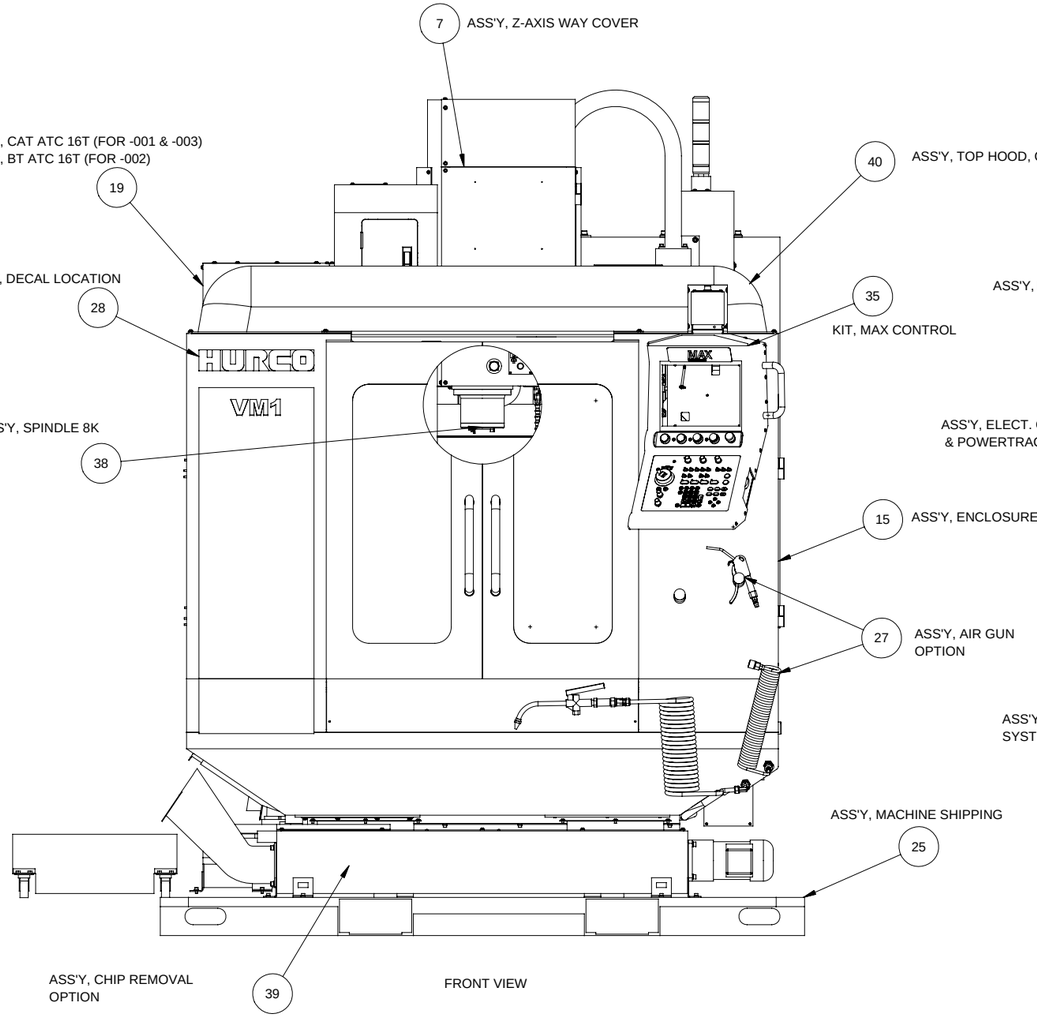


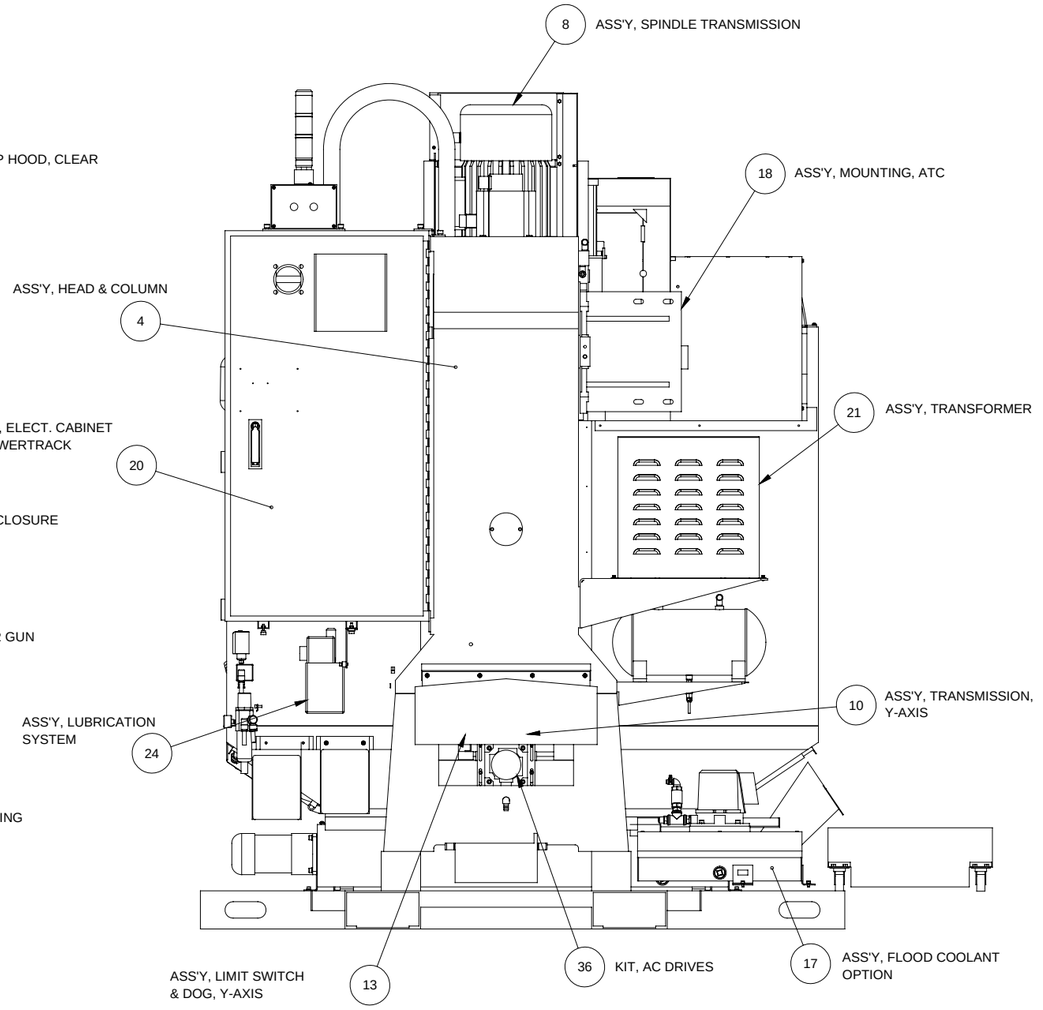


PARTS LIST

| QTY. | PART NUMBER | ITEM DESCRIPTION | ITEM |
|---|---|---|---|

| REV | E.C.N. NO. | REVISION DESCRIPTION | REV BY | DATE | CHK BY | DATE | APPD BY | DATE |
|---|---|---|---|---|---|---|---|---|
| A | 15609 | ORIGINAL RELEASE | | | | | | |

SURFACE TREATMENT: NONE

HEAT TREATMENT: NONE

FIRST USED ON: VM1

EXCEPT AS NOTED: ALL CORNERS MUST BE AS FOLLOWS
INSIDE: 1.3 X 45° OR 1.3 R MAX
OUTSIDE: 0.8 X 45° OR 1.3 R

EXCEPT AS NOTED: WELDING TOLERANCE MUST BE AS FOLLOWS ±°

EXCEPT AS NOTED: ALL DIMENSIONS IN METRIC TOLERANCE
DECIMAL: .0 ±0.8; .00 ±0.4; .000 ±0.13; .0000 ±0.013
ANGULAR ±0°30'

HURCO COMPANIES, INC.
INDIANAPOLIS, IN U.S.A.

DESCRIPTION: ASS'Y, MACHINE, VM1

| DRAWN | DATE | CHECKED | DATE | APPROVED | DATE |
|---|---|---|---|---|---|
| PFB | 6/12/2002 | PFB | 6/12/2002 | PFB | 6/13/2002 |

SCALE: 1:8
UNIT OF MEAS.: PC
SIZE: D
DRAWING: 003-0100- 001 002 003
SHT. 2 OF 3
REV. G

| SIZE | DRAWING | SHT. | REV. |
|---|---|---|---|
| D | 003-0100- 001 002 003 | 3 OF 3 | G |

PROPRIETARY INFORMATION

INFORMATION CONTAINED HEREIN IS THE PROPERTY OF HURCO COMPANIES, INC. NO REPRODUCTION OR DISCLOSURE OF THIS INFORMATION SHALL BE MADE BY THE RECIPIENT TO ANY OTHER PERSON OR ORGANIZATION WITHOUT THE PRIOR WRITTEN CONSENT OF HURCO COMPANIES, INC.

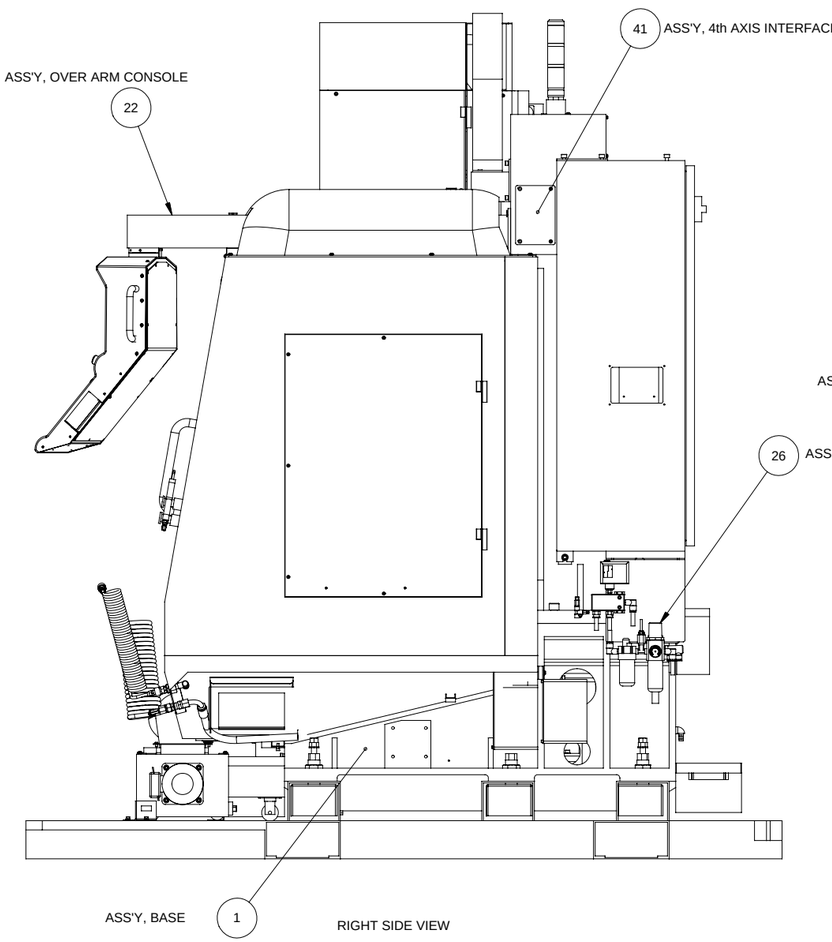


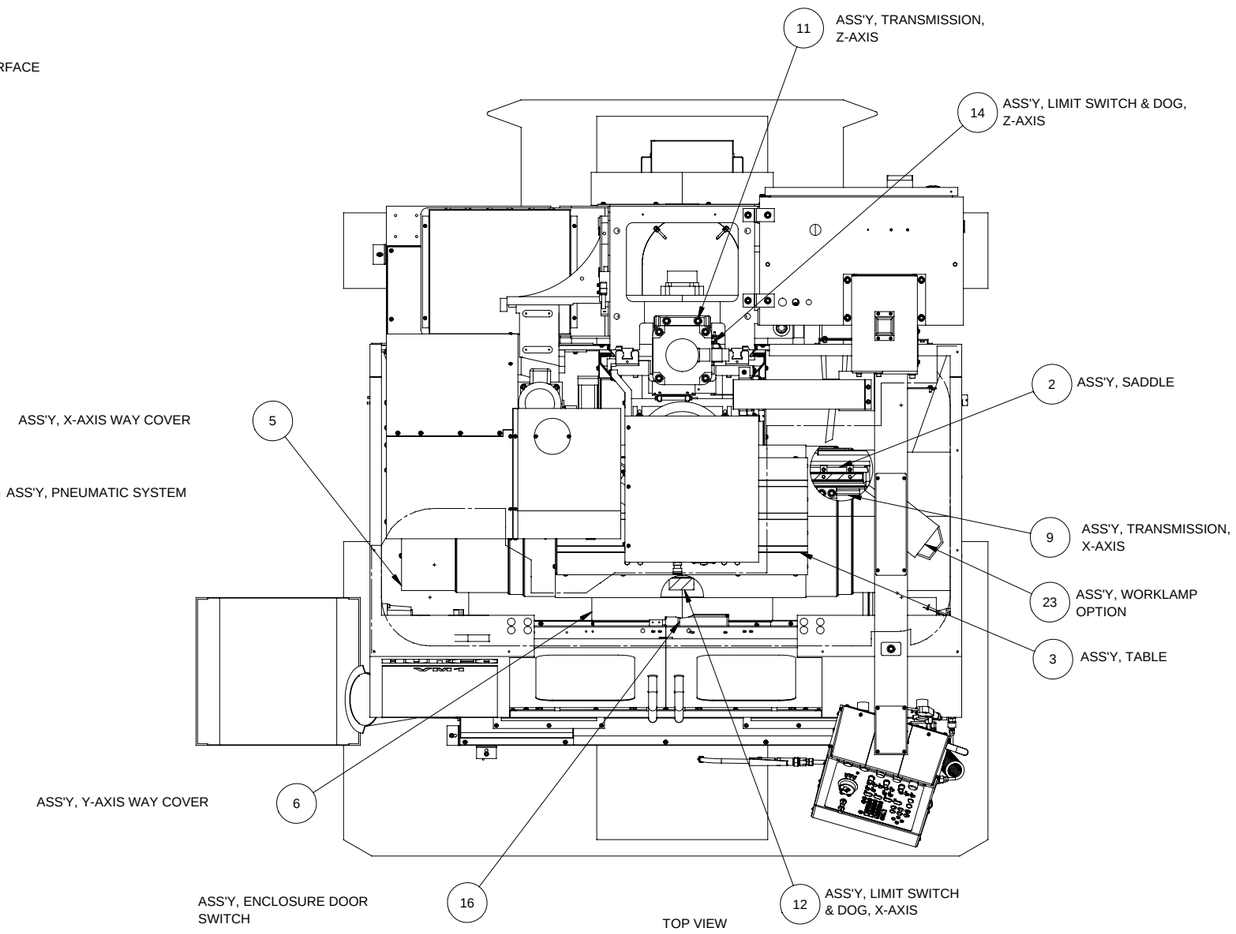


| REV | E.C.N. NO. | REVISION DESCRIPTION | REV BY | DATE | CHK BY | DATE | APPD BY | DATE |
|---|---|---|---|---|---|---|---|---|
| A | 15609 | ORIGINAL RELEASE | | | | | | |

SURFACE TREATMENT: NONE

HEAT TREATMENT: NONE

FIRST USED ON: VM1

EXCEPT AS NOTED: ALL CORNERS MUST BE AS FOLLOWS
INSIDE: 1.3 X 45° OR 1.3 R MAX
OUTSIDE: 0.8 X 45° OR 1.3 R

EXCEPT AS NOTED: ALL DIMENSIONS IN METRIC TOLERANCE
DECIMAL: .0 ±0.8; .00 ±0.4; .000 ±0.13; .0000 ±0.013; ANGULAR ±1°30'

EXCEPT AS NOTED: WELDING TOLERANCE MUST BE AS FOLLOWS ±3

HURCO COMPANIES, INC.
INDIANAPOLIS, IN U.S.A.

DESCRIPTION: ASS'Y, MACHINE, VM1

| DRAWN | DATE | CHECKED | DATE | APPROVED | DATE |
|---|---|---|---|---|---|
| PFB | 6/12/2002 | PFB | 6/12/2002 | PFB | 6/13/2002 |

SCALE: 1:8
UNIT OF MEAS.: PC
SIZE: D
DRAWING: 003-0100- 001 002 003
SHT. 3 OF 3
REV. G

| QTY. | PART NUMBER | ITEM DESCRIPTION | ITEM |
|---|---|---|---|

PARTS LIST

| SIZE | DRAWING | SHT. | REV. |
|---|---|---|---|
| D | 003-0100- 004 & 006 | 1 OF 3 | G |

PROPRIETARY INFORMATION

INFORMATION CONTAINED HEREIN IS THE PROPERTY OF HURCO COMPANIES, INC. NO REPRODUCTION OR DISCLOSURE OF THIS INFORMATION SHALL BE MADE BY THE RECIPIENT TO ANY OTHER PERSON OR ORGANIZATION WITHOUT THE PRIOR WRITTEN CONSENT OF HURCO COMPANIES, INC.

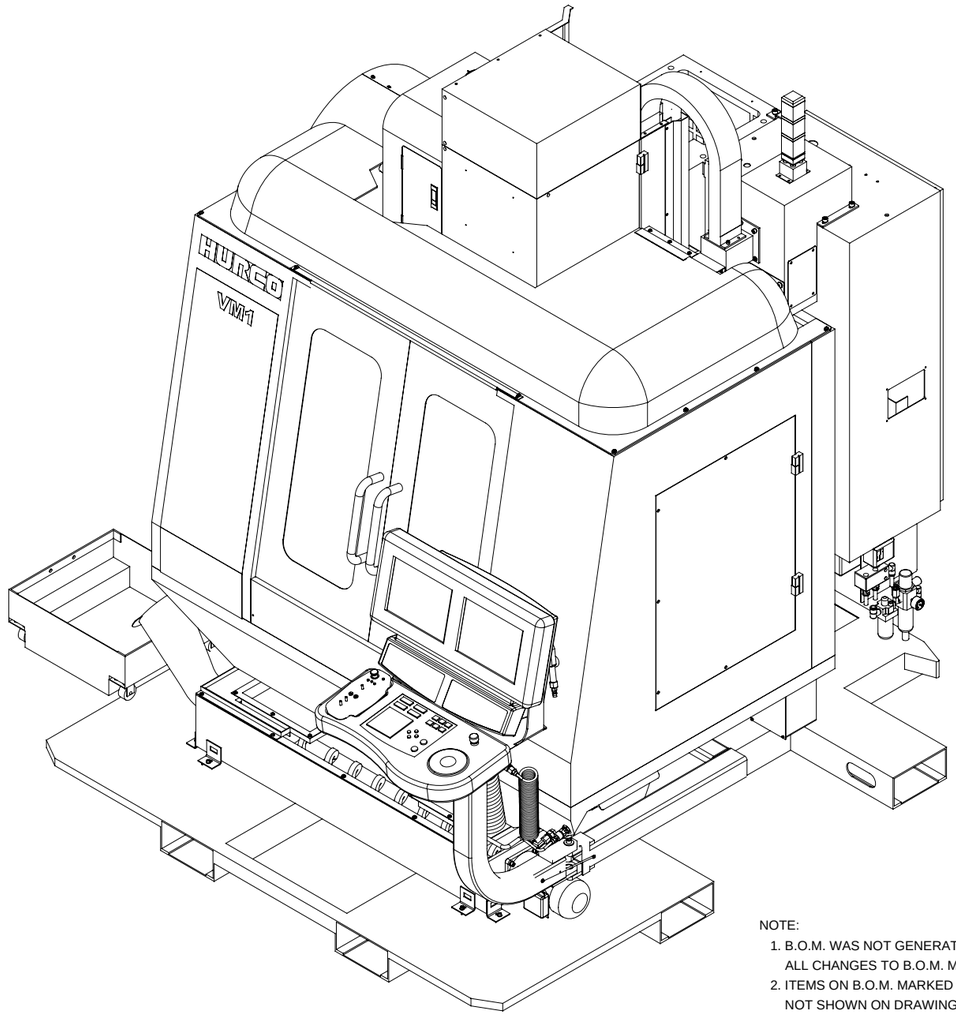


NOTE:
1. B.O.M. WAS NOT GENERATED BY SOLID MODEL. ALL CHANGES TO B.O.M. MUST BE DONE MANUALLY.
2. ITEMS ON B.O.M. MARKED WITH ASTERISK ( * ) ARE NOT SHOWN ON DRAWING.

| | | | | | |
|---|---|---|---|---|---|
| G3 E8 | | | | | 43 |
| G4 E2 | - | 1 | 003-0102-013 | ASS'Y, 4TH AXIS INTERFACE | 42 |
| G2 F | 1 | - | 003-0102-007 | ASS'Y, 4TH AXIS INTERFACE | 41 |
| | - | 1 | 003-0101-005 | ASS'Y, DOME, CLEAR | 40 |
| | 1 | 1 | 003-0102-005 | ASS'Y, CHIP REMOVAL WITH CHIP CART | 39 |
| E7 | - | 1 | 003-1015-027 | ASS'Y, SPINDLE, 10K | 38 |
| | 1 | - | 003-0103-003 | ASS'Y, SPINDLE, 8K | 38 |
| * | 1 | 1 | 002-4101-157 | KIT, INVERTER | 37 |
| | 1 | 1 | 002-4101-156 | KIT, AC DRIVES | 36 |
| | 1 | 1 | 007-3005-018 | CONTROL KIT, MAX4 VMX1 | 35 |
| * | 1 | 1 | 003-1021-041 | ASS'Y, MANUALS, VMX1 | 34 |
| ** | 1 | 1 | 003-0108-007 | ASS'Y, INSTALL KIT | 33 |
| *** | 1 | 1 | 003-0101-018 | SCHEMATIC, LUBRICATION | 32 |
| **** | 1 | 1 | 003-0101-016 | SCHEMATIC, COOLANT | 31 |
| ***** | 1 | 1 | 003-0101-017 | SCHEMATIC, PNEUMATIC | 30 |
| ****** | - | 1 | 003-0101-015 | ASS'Y, WARNING LABEL LOCATION, CE | 29 |
| ****** | 1 | - | 003-0101-019 | ASS'Y, WARNING LABEL LOCATION | 29 |
| | 1 | 1 | 003-0101-012 | ASS'Y, DECAL LOCATION, VM1 | 28 |
| | 1 | 1 | 003-0101-008 | ASS'Y, AIR GUN | 27 |
| | 1 | 1 | 003-0101-006 | ASS'Y, PNEUMATIC SYSTEM | 26 |
| | 1 | 1 | 003-0101-014 | ASS'Y, MACHINE SHIPPING, DSM | 25 |
| | 1 | 1 | 003-0101-010 | ASS'Y, LUBRICATION SYSTEM | 24 |
| | 1 | 1 | 003-0108-004 | ASS'Y, WORKLIGHT | 23 |
| | 1 | 1 | 003-0101-011 | ASS'Y, PENDANT | 22 |
| | - | 1 | 003-0101-007 | ASS'Y, MOUNTING, TRANSFORMER | 21 |
| E6 | 1 | - | 003-0105-014 | ASS'Y, ELECT. CABINET & POWERTRAK, NON-CE | 20 |
| E5 | - | 1 | 003-0105-012 | ASS'Y, ELECT. CABINET & POWERTRAK, CE | 20 |
| | 1 | 1 | 003-0106-002 | ASS'Y, AUTOMATIC TOOL CHANGER, CAT40 | 19 |
| | 1 | 1 | 003-0106-001 | ASS'Y, ATC MOUNTING | 18 |
| | 1 | 1 | 003-0108-001 | ASS'Y, FLOOD COOLANT, NOZZLE, 50Hz/60Hz | 17 |
| | - | 1 | 003-0107-002 | ASS'Y, ENCLOSURE DOOR SWITCH | 16 |
| | 1 | 1 | 003-0107-001 | ASS'Y, ENCLOSURE | 15 |
| | 1 | 1 | 003-0105-003 | ASS'Y, Z-AXIS LIMIT SWITCH & DOG | 14 |
| | 1 | 1 | 003-0105-002 | ASS'Y, Y-AXIS LIMIT SWITCH & DOG | 13 |
| | 1 | 1 | 003-0105-001 | ASS'Y, X-AXIS LIMIT SWITCH & DOG | 12 |
| E4 | 1 | 1 | 003-0104-004 | ASS'Y, Z-AXIS TRANSMISSION | 11 |
| | 1 | 1 | 003-0104-002 | ASS'Y, Y-AXIS TRANSMISSION | 10 |
| | 1 | 1 | 003-0104-001 | ASS'Y, X-AXIS TRANSMISSION | 9 |
| | - | 1 | 003-0103-002 | ASS'Y, SPINDLE TRANSMISSION, 10K | 8 |
| | 1 | - | 003-0103-001 | ASS'Y, SPINDLE TRANSMISSION, 8K | 8 |
| | 1 | 1 | 003-0101-003 | ASS'Y, Z-AXIS WAY COVER | 7 |
| G1 | 1 | 1 | 003-0101-020 | ASS'Y, Y-AXIS WAY COVER | 6 |
| | 1 | 1 | 003-0101-001 | ASS'Y, X-AXIS WAY COVER | 5 |
| E3 | 1 | 1 | 003-0102-008 | ASS'Y, HEAD & COLUMN | 4 |
| | 1 | 1 | 003-0102-003 | ASS'Y, TABLE | 3 |
| | 1 | 1 | 003-0102-002 | ASS'Y, SADDLE | 2 |
| | 1 | 1 | 003-0102-001 | ASS'Y, BASE | 1 |
| | USA -004 QTY. | NETH -006 QTY. | PART NUMBER | DESCRIPTION | ITEM |

| REV | E.C.N. NO. | REVISION DESCRIPTION | REV BY | DATE | CHK BY | DATE | APPD BY | DATE |
|---|---|---|---|---|---|---|---|---|
| G | 15826 | 1) WAS 003-0101-002, 2) DEL 003-0102-007[-006NETH] 3) DEL 003-0208-006[-003NETH], 4) ADDED 003-0102-013 [-006NETH] | SMc | 2-25 2005 | PFB | 2-25 2005 | PFB | 2-25 2005 |
| F | 15761 | WAS 003-0102-006 ON -006 & ADDED TO -004 | SJT | 8/20 2004 | DEO | 8/20 2004 | PFB | 9/20 2004 |
| E | 15710 | NOTE: ALL BALLOONS RE-NUMBERED (5) WAS 003-0105-009, (6) ADDED 003-0105-014; (7) WAS 003-0108-002; (8)ADDED ITEM 43 | GLH | 9 23 03 | PFB | 9 23 03 | | |
| E | 15710 | (2)DELETED 003-0102-007 QTY1 FROM -004, (3) WAS 003-0102-004, (4) WAS 003-0104-003, (1) REDRAWN TO SOLIDWORKS, VM1 & VMX1 NOW ON SEPARATE DRAWINGS, | GLH | 9 23 03 | PFB | 9 23 03 | | |
| D | 15582 | (6) -003 WAS 003-1007-046 QTY. 1, (7) -004, -005, & -006 WAS 003-1007-047 QTY. 1 | GLH | 9 24 03 | PFB | 9 24 03 | PFB | 9 31 03 |
| D | 15582 | 49 TO -004 & -005, (4) ADDED 003-0105-013, (5) -001 & -002 WAS 003-1007-045 QTY. 1, (1) -001/-002/-004 & -005 WAS QTY. 1, (2) ADDED (EUR) TO DESCRIPTION, (3) ADDED ITEM | GLH | 9 24 03 | PFB | 9 24 03 | PFB | 9 31 03 |
| C | 15517 | 46, 47 & 48 ADDED (1) ADD QTY 1 ON -002, -003, (2) DEL. QTY. 1 ON -006, (3) ADD QTY 1 ON -002, (4) ITEMS | JLW | 10 10 02 | PFB | 10 10 02 | PFB | 10 10 02 |
| B | 15499 | ITEM 45 ON THE VMX1 MODELS (5) REMOVED 003-0101-014 FROM THE VM1 MACHINES, (6) ADDED ITEM 44, (7) ADDED | PFB | 9 17 02 | PFB | 9 17 02 | PFB | 9 17 02 |
| B | 15499 | (3) ADDED 003-0101-012 TO THE VM1 MACHINES, (4) ADDED ITEM #31 003-0101-019, (1)REMOVED 003-0106-002 FROM -005, (2)ADDED 003-0101-013 TO THE VM1 MACHINES, | PFB | 9 17 02 | PFB | 9 17 02 | PFB | 9 17 02 |
| A | 15487 | ORIGINAL RELEASE | PFB | 9 13 02 | PFB | 9 13 02 | PFB | 9 13 02 |
| REV | E.C.N. NO. | REVISION DESCRIPTION | REV BY | DATE | CHK BY | DATE | APPD BY | DATE |

SURFACE TREATMENT: NONE

HEAT TREATMENT: NONE

FIRST USED ON: VMX1

EXCEPT AS NOTED: ALL CORNERS MUST BE AS FOLLOWS INSIDE: 1.3 X 45° OR 1.3 R MAX OUTSIDE: 0.8 X 45° OR 1.3 R

EXCEPT AS NOTED: WELDING TOLERANCE MUST BE AS FOLLOWS ±3

EXCEPT AS NOTED: ALL DIMENSIONS IN METRIC TOLERANCE DECIMAL .0 ±0.8 .00 ±0.4 .000 ±0.13 .0000 ±0.013 ANGULAR ±0°30'

HURCO COMPANIES, INC. INDIANAPOLIS, IN U.S.A.

DESCRIPTION: ASS'Y, MACHINE, VMX1

| DRAWN | DATE | CHECKED | DATE | APPROVED | DATE |
|---|---|---|---|---|---|
| PFB | 6/12/2002 | PFB | 6/12/2002 | PFB | 6/13/2002 |

SCALE 1:8 | UNIT OF MEAS. PC | SIZE D | DRAWING 003-0100- 004 & 006 | SHT. 1 OF 3 | REV. G

| SIZE | DRAWING | SHT. | REV. |
|---|---|---|---|
| D | 003-0100- 004 & 006 | 2 OF 3 | G |

PROPRIETARY INFORMATION
INFORMATION CONTAINED HEREIN IS THE PROPERTY OF HURCO COMPANIES, INC. NO REPRODUCTION OR DISCLOSURE OF THIS INFORMATION SHALL BE MADE BY THE RECIPIENT TO ANY OTHER PERSON OR ORGANIZATION WITHOUT THE PRIOR WRITTEN CONSENT OF HURCO COMPANIES, INC.

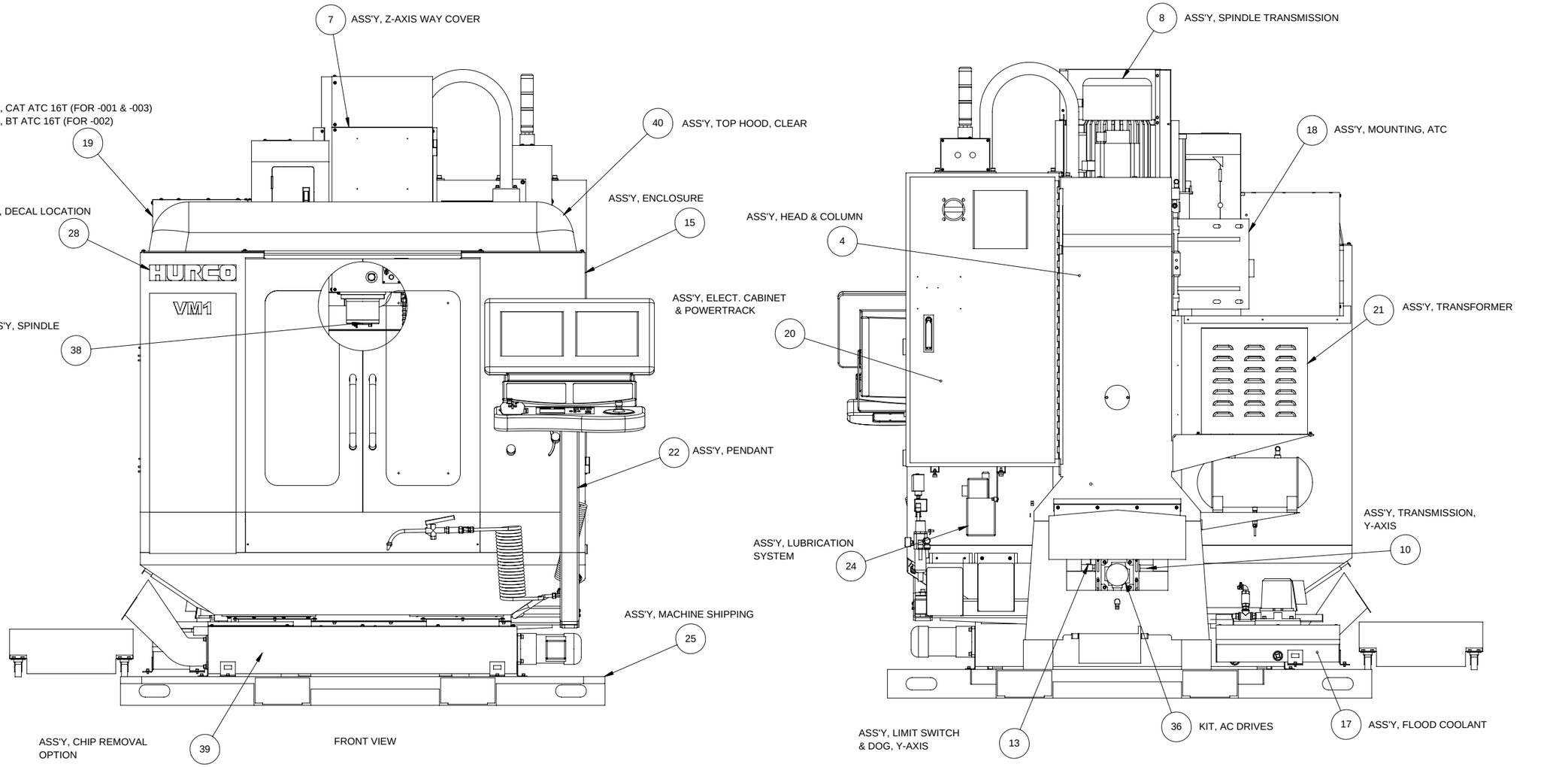


PARTS LIST

| QTY. | PART NUMBER | ITEM DESCRIPTION | ITEM |
|---|---|---|---|

| REV | E.C.N. NO. | REVISION DESCRIPTION | REV BY | DATE | CHK BY | DATE | APPD BY | DATE |
|---|---|---|---|---|---|---|---|---|
| A | 15609 | ORIGINAL RELEASE | | | | | | |

SURFACE TREATMENT: NONE
HEAT TREATMENT: NONE
FIRST USED ON: VMX1

EXCEPT AS NOTED: ALL CORNERS MUST BE AS FOLLOWS
INSIDE: 1.3 X 45° OR 1.3 R MAX
OUTSIDE: 0.8 X 45° OR 1.3 R

EXCEPT AS NOTED: ALL DIMENSIONS IN METRIC TOLERANCE
DECIMAL: .0 ±0.8, .00 ±0.4, .000 ±0.13, .0000 ±0.013
ANGULAR ±0°30'

EXCEPT AS NOTED: WELDING TOLERANCE MUST BE AS FOLLOWS
±3

HURCO COMPANIES, INC.
INDIANAPOLIS, IN U.S.A.

DESCRIPTION: ASS'Y, MACHINE, VMX1

| DRAWN | DATE | CHECKED | DATE | APPROVED | DATE |
|---|---|---|---|---|---|
| PFB | 6/12/2002 | PFB | 6/12/2002 | PFB | 6/13/2002 |

| SCALE | SIZE | DRAWING | SHT. | REV. |
|---|---|---|---|---|
| 1:8 | D | 003-0100- 004 & 006 | 2 OF 3 | G |

UNIT OF MEAS.: PC

| SIZE | DRAWING | SHT. | REV. |
|---|---|---|---|
| D | 003-0100- 004 & 006 | 3 OF 3 | G |

PROPRIETARY INFORMATION

INFORMATION CONTAINED HEREIN IS THE PROPERTY OF HURCO COMPANIES, INC. NO REPRODUCTION OR DISCLOSURE OF THIS INFORMATION SHALL BE MADE BY THE RECIPIENT TO ANY OTHER PERSON OR ORGANIZATION WITHOUT THE PRIOR WRITTEN CONSENT OF HURCO COMPANIES, INC.

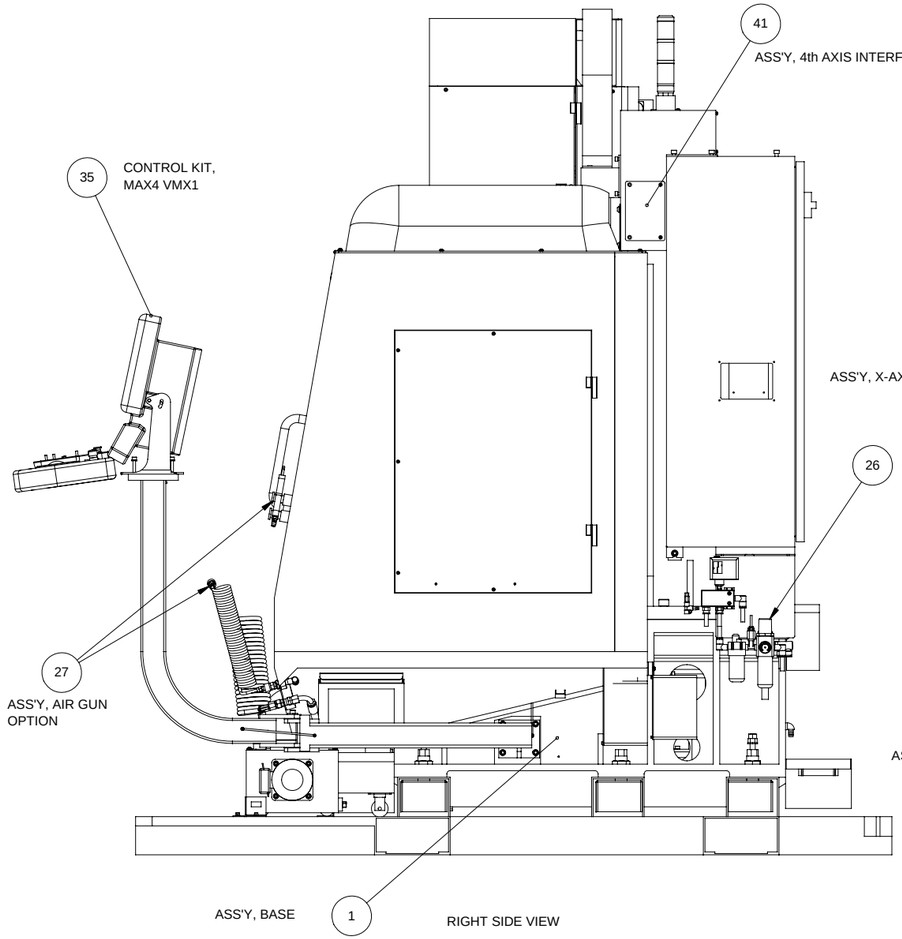


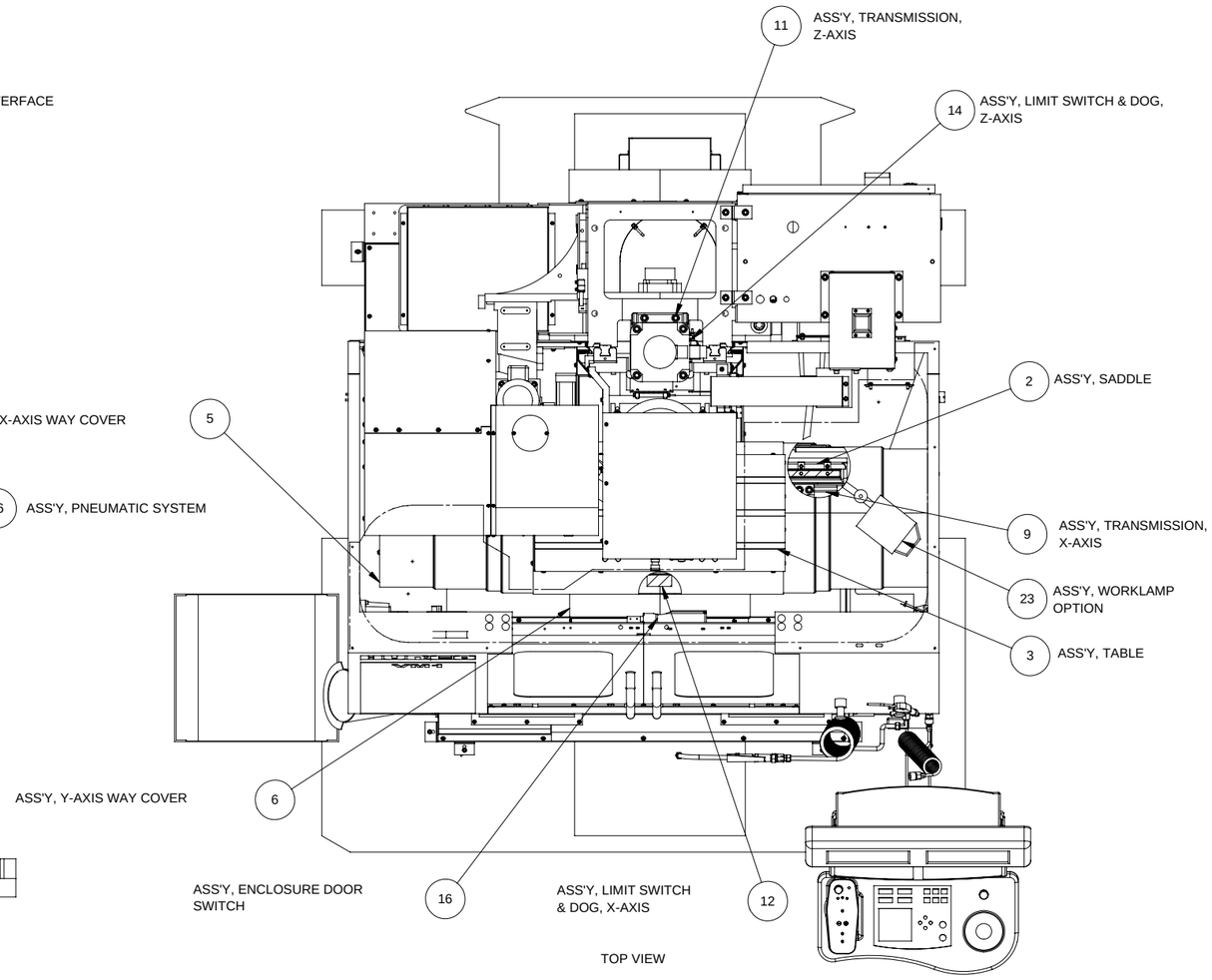


| QTY. | PART NUMBER | ITEM DESCRIPTION | ITEM |
|---|---|---|---|

PARTS LIST

| REV | E.C.N. NO. | REVISION DESCRIPTION | REV BY | DATE | CHK BY | DATE | APPD BY | DATE |
|---|---|---|---|---|---|---|---|---|
| A | 15609 | ORIGINAL RELEASE | | | | | | |

SURFACE TREATMENT: NONE

HEAT TREATMENT: NONE

FIRST USED ON: VMX1

EXCEPT AS NOTED: ALL CORNERS MUST BE AS FOLLOWS
INSIDE: 1.3 X 45° OR 1.3 R MAX
OUTSIDE: 0.8 X 45° OR 1.3 R

EXCEPT AS NOTED: ALL DIMENSIONS IN METRIC TOLERANCE
DECIMAL: .0 ±0.8; .00 ±0.4; .000 ±0.13; .0000 ±0.013; ANGULAR ±0°30'

EXCEPT AS NOTED: WELDING TOLERANCE MUST BE AS FOLLOWS
±[3]

HURCO COMPANIES, INC.
INDIANAPOLIS, IN U.S.A.

DESCRIPTION: ASS'Y, MACHINE, VMX1

| DRAWN | DATE | CHECKED | DATE | APPROVED | DATE |
|---|---|---|---|---|---|
| PFB | 6/12/2002 | PFB | 6/12/2002 | PFB | 6/13/2002 |

| SCALE | SIZE | DRAWING | SHT. | REV. |
|---|---|---|---|---|
| 1:8 | D | 003-0100- 004 & 006 | 3 OF 3 | G |

UNIT OF MEAS.: PC

# Ass'y., X Axis Way Cover, 003-0101-001—Rev. A

| SIZE | DRAWING | SHT. | REV. |
|---|---|---|---|
| D | 003-0101-001EX | 1 OF 1 | A |

**PROPRIETARY INFORMATION**

INFORMATION CONTAINED HEREIN IS THE PROPERTY OF HURCO COMPANIES, INC. NO REPRODUCTION OR DISCLOSURE OF THIS INFORMATION SHALL BE MADE BY THE RECIPIENT TO ANY OTHER PERSON OR ORGANIZATION WITHOUT THE PRIOR WRITTEN CONSENT OF HURCO COMPANIES, INC.

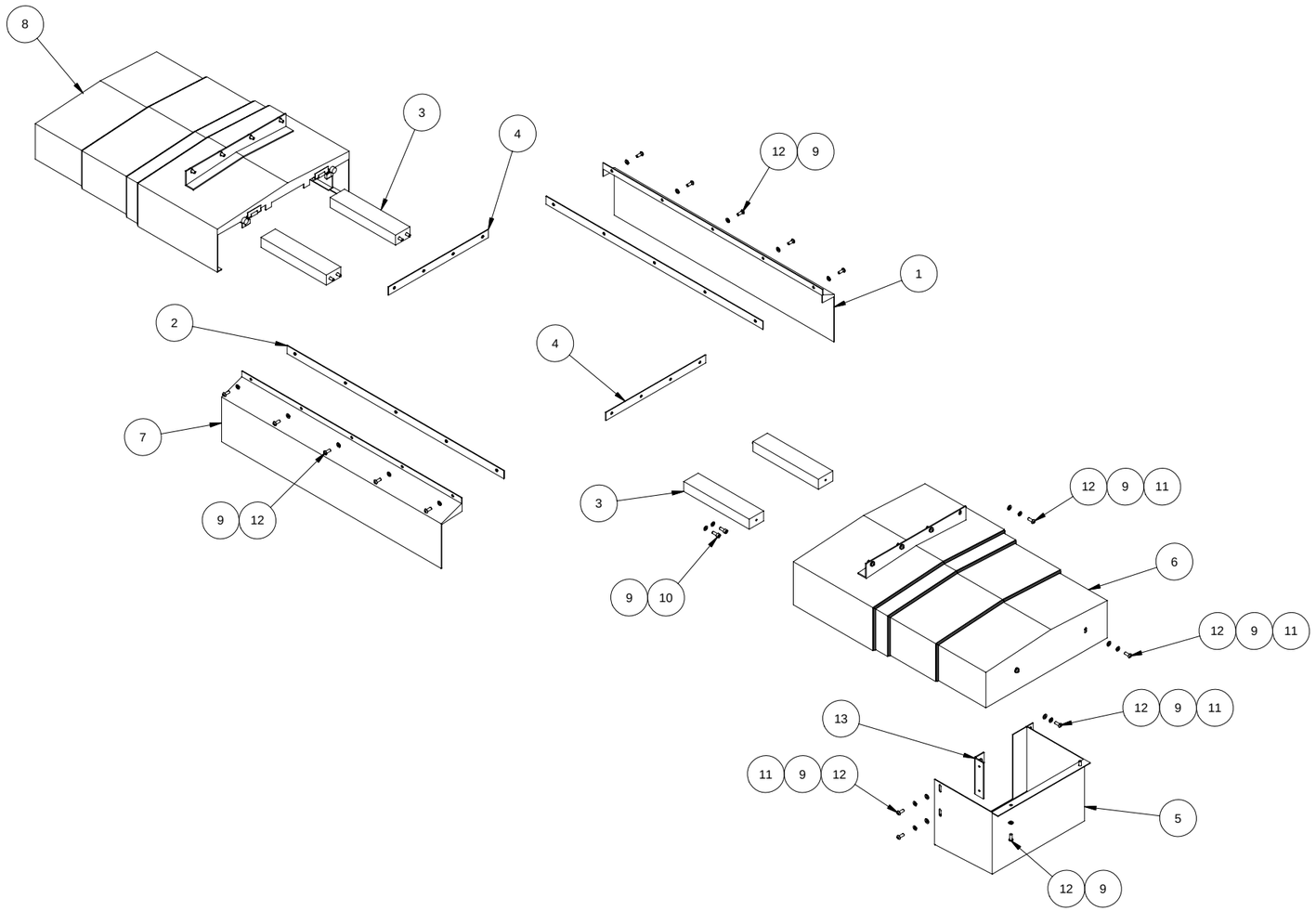


| ITEM | DESCRIPTION | PART NO. | QTY. |
|---|---|---|---|
| 13 | BRACKET, COVER, X MOTOR | 803-0101-039 | 1 |
| 12 | BHSCS, M 6 X 1.0 P 16 LG | 108-5004-004 | 30 |
| 11 | WASHER, FLAT, M6 | 110-5001-004 | 18 |
| 10 | SHCS, M 6 X 1.0 P X 16 LG | 101-5008-004 | 8 |
| 9 | LOCKWASHER, M6, HELICAL SPRING | 110-0046-007 | 38 |
| 8 | COVER, X WAY, L.H. | 803-0102-003 | 1 |
| 7 | GUARD, TABLE, FRONT | 803-0102-014 | 1 |
| 6 | COVER, X WAY, R.H. | 803-0102-002 | 1 |
| 5 | COVER, X MOTOR | 803-0102-004 | 1 |
| 4 | GASKET, X WAY COVER | 803-0106-008 | 2 |
| 3 | BRACKET, X WAY COVER SUPPORT | 803-0101-013 | 4 |
| 2 | GASKET, TABLE, FRONT/REAR | 803-0106-009 | 2 |
| 1 | GUARD, TABLE, REAR | 803-0102-015 | 1 |

| REV | E.C.N. NO. | REVISION DESCRIPTION | REV BY | DATE | CHK BY | DATE | APPD BY | DATE |
|---|---|---|---|---|---|---|---|---|
| A | 15486 | ORIGINAL RELEASE | | | | | | |

SURFACE TREATMENT: NONE

HEAT TREATMENT: NONE

FIRST USED ON: VM 1

EXCEPT AS NOTED: ALL CORNERS MUST BE AS FOLLOWS
INSIDE: 1.3 X 45° OR 1.3 R MAX
OUTSIDE: 0.8 X 45° OR 1.3 R

EXCEPT AS NOTED: WELDING TOLERANCE MUST BE AS FOLLOWS ±3°

EXCEPT AS NOTED: ALL DIMENSIONS IN METRIC TOLERANCE
DECIMAL
.0 ±0.8
.00 ±0.4
.000 ±0.13
.0000 ±0.013
ANGULAR ±0°30'

HURCO COMPANIES, INC.
INDIANAPOLIS, IN U.S.A.

DESCRIPTION: ASS'Y, X AXIS WAY COVER

| DRAWN | DATE | CHECKED | DATE | APPROVED | DATE |
|---|---|---|---|---|---|
| JTU | 07/03/02 | MLE | 07/05/02 | JLW | 09-17-02 |

| SCALE | SIZE | DRAWING | SHT. | REV. |
|---|---|---|---|---|
| 1:10 | D | 003-0101-001EX | 1 OF 1 | A |

UNIT OF MEAS.: PC

# Ass'y., Z-Axis Cover, 003-0101-003—Rev. A

| SIZE | DRAWING | SHT. | REV. |
|---|---|---|---|
| D | 003-0101-003 | 1 OF 2 | A |

PROPRIETARY INFORMATION

INFORMATION CONTAINED HEREIN IS THE PROPERTY OF HURCO COMPANIES, INC. NO REPRODUCTION OR DISCLOSURE OF THIS INFORMATION SHALL BE MADE BY THE RECIPIENT TO ANY OTHER PERSON OR ORGANIZATION WITHOUT THE PRIOR WRITTEN CONSENT OF HURCO COMPANIES, INC.

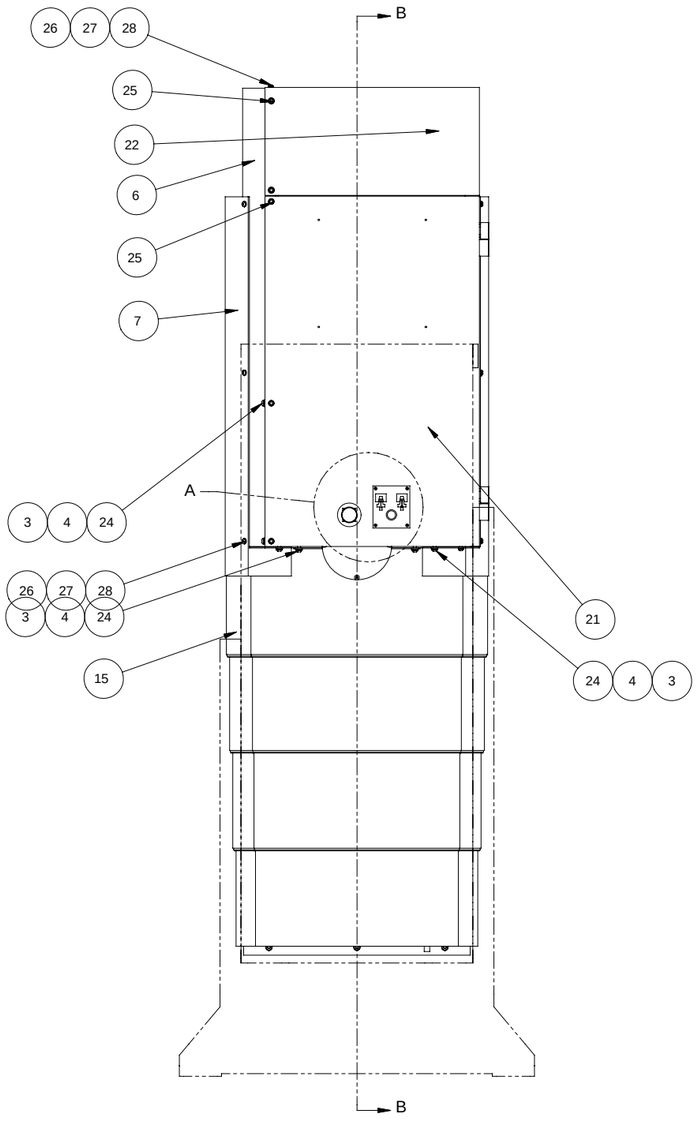


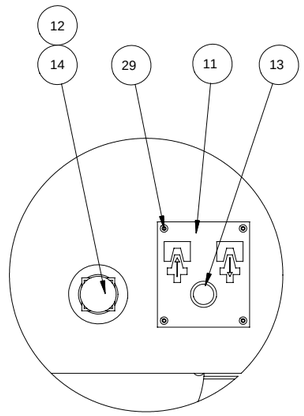


DATAIL A
SCALE 1=2

| QTY. | PART NO. | DESCRIPTION | ITEM |
|---|---|---|---|
| 8 | 101-5007-022 | SHCS, M 5 X 0.8 P X 16 LG | 35 |
| 4 | 101-5021-014 | SHCS, M 4 X 0.7 P X 45 LG | 34 |
| 4 | 110-0046-005 | LOCKWASHER, M4, HELICAL SPRING | 33 |
| 4 | 110-5001-002 | WASHER, FLAT, M4 | 32 |
| 4 | 101-5010-005 | SHCS, M 8 X 1.25 P X 20 LG | 31 |
| 4 | 110-0046-008 | LOCKWASHER, M8, HELICAL SPRING | 30 |
| 4 | 108-5001-001 | BHSCS, M 3 X 0.5 P X 6 LG | 29 |
| 18 | 108-5003-004 | BHCS, M 5 X 0.8 P X 12 LG | 28 |
| 26 | 110-0046-006 | LOCKWASHER, M5, HELICAL SPRING | 27 |
| 14 | 110-5001-003 | WASHER, FLAT, M5 | 26 |
| 8 | 101-5008-008 | SHCS, M 6 X 1.0 P X 25 LG | 25 |
| 35 | 108-5004-004 | BHSCS, M 6 X 1.0 P 16 LG | 24 |
| 1 | 803-0101-036 | BRACKET, COVER, HEAD, TOP | 23 |
| 1 | 803-0102-025 | COVER, HEAD, TOP | 22 |
| 1 | 803-0102-010 | COVER, HEAD, MAIN, VM1 | 21 |
| 1 | 420-0001-040 | FAN, COOLING, 4" DIA | 20 |
| 1 | 803-0101-035 | BRACKET, FAN | 19 |
| 1 | 803-0102-024 | COVER, HEAD, FRONT | 18 |
| 1 | 803-0102-019 | COVER, COLUMN, LOWER | 17 |
| 2 | 803-0101-015 | BRACKET, Z WAY COVER SUPPORT | 16 |
| 1 | 803-0102-009 | COVER, Z AXIS WAY | 15 |
| 1 | 404-7502-010 | SWITCH, EMERGENCY STOP | 14 |
| 1 | 404-0083-011 | SWITCH, PUSHBUTTON | 13 |
| 1 | 703-1005-599 | DECAL, EMERGENCY STOP | 12 |
| 1 | 803-1056-008 | LABEL, CLAMP - UNCLAMP | 11 |
| 1 | 803-1003-006 | COVER, HEAD BOTTOM | 10 |
| 1 | 803-0102-013 | COVER, HEAD, RIGHT REAR | 9 |
| 2 | 603-5002-001 | HINGE, L.H. | 8 |
| 1 | 803-0102-012 | COVER, HEAD, LEFT REAR | 7 |
| 1 | 803-0102-011 | COVER, HEAD, LEFT | 6 |
| 2 | 101-5008-004 | SHCS, M 6 X 1.0 P X 16 LG | 5 |
| 37 | 110-0046-007 | LOCKWASHER, M6, HELICAL SPRING | 4 |
| 37 | 110-5001-004 | WASHER, FLAT, M6 | 3 |
| 1 | 803-0101-016 | BRACKET, MOUNTING, MAIN HEAD COVER | 2 |
| 2 | 803-0106-012 | SHIELD, Z RAIL | 1 |

| REV | E.C.N. NO. | REVISION DESCRIPTION | REV BY | DATE | CHK BY | DATE | APPD BY | DATE |
|---|---|---|---|---|---|---|---|---|
| A | 15484 | ORIGINAL RELEASE | | | | | | |

SURFACE TREATMENT: NONE

HEAT TREATMENT: NONE

FIRST USED ON: VM1

EXCEPT AS NOTED: ALL CORNERS MUST BE AS FOLLOWS
INSIDE: 1.3 X 45° OR 1.3 R MAX
OUTSIDE: 0.8 X 45° OR 1.3 R

EXCEPT AS NOTED: ALL DIMENSIONS IN METRIC TOLERANCE
DECIMAL: .0 ±0.8, .00 ±0.4, .000 ±0.13, .0000 ±0.013, ANGULAR ±2°30'

EXCEPT AS NOTED: WELDING TOLERANCE MUST BE AS FOLLOWS ±3

HURCO COMPANIES, INC.
INDIANAPOLIS, IN U.S.A.

DESCRIPTION: ASS'Y, Z AXIS COVER

| DRAWN | DATE | CHECKED | DATE | APPROVED | DATE |
|---|---|---|---|---|---|
| KEN | 07-15-02 | MLE | 07-17-02 | JLW | 09-17-02 |

| SCALE | SIZE | DRAWING | SHT. | REV. |
|---|---|---|---|---|
| 1:5 | D | 003-0101-003 | 1 OF 2 | A |

UNIT OF MEAS.: PC

| SIZE | DRAWING | SHT. | REV. |
|---|---|---|---|
| D | 003-0101-003 | 2 OF 2 | A |

PROPRIETARY INFORMATION

INFORMATION CONTAINED HEREIN IS THE PROPERTY OF HURCO COMPANIES, INC. NO REPRODUCTION OR DISCLOSURE OF THIS INFORMATION SHALL BE MADE BY THE RECIPIENT TO ANY OTHER PERSON OR ORGANIZATION WITHOUT THE PRIOR WRITTEN CONSENT OF HURCO COMPANIES, INC.

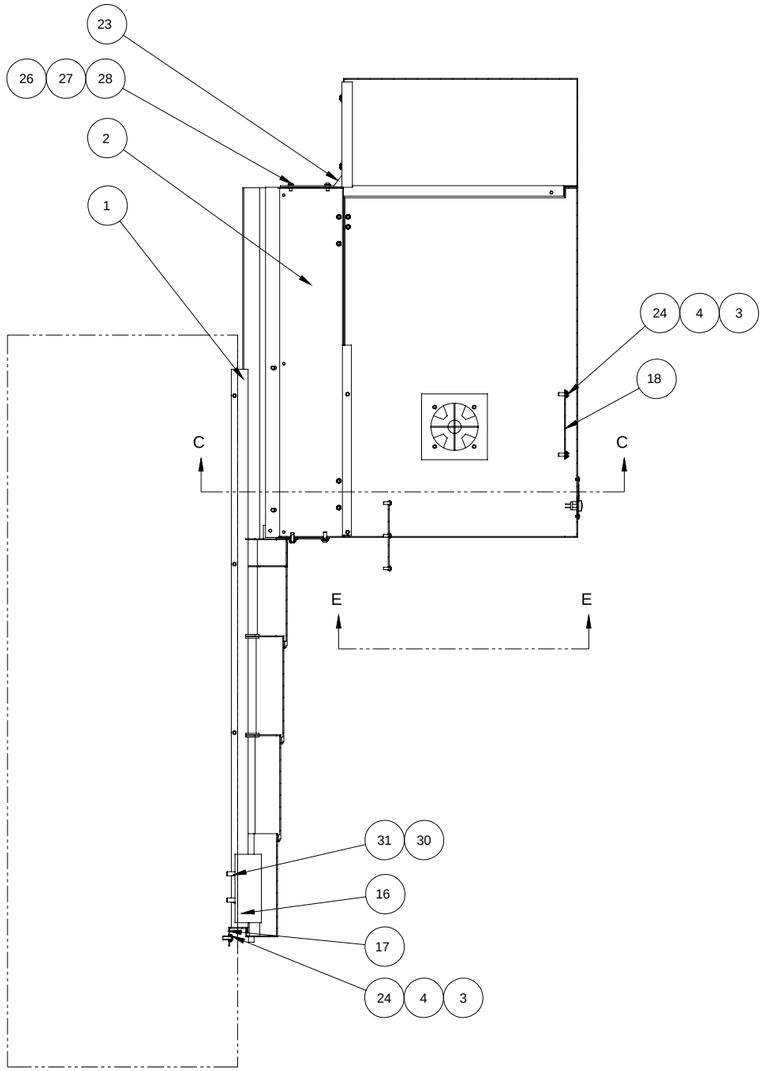


SECTION B-B
FROM SHEET 1

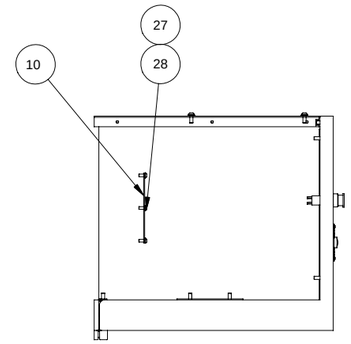


VIEW: E-E
SCALE 1=5

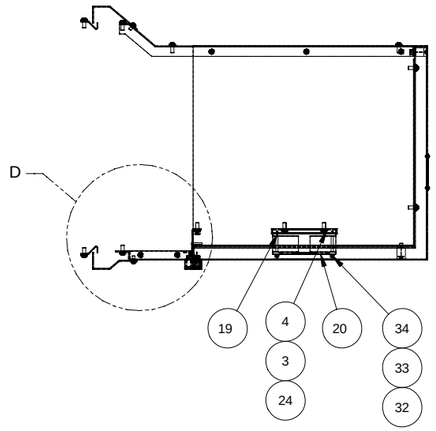


SECTION C-C
SCALE 1=5

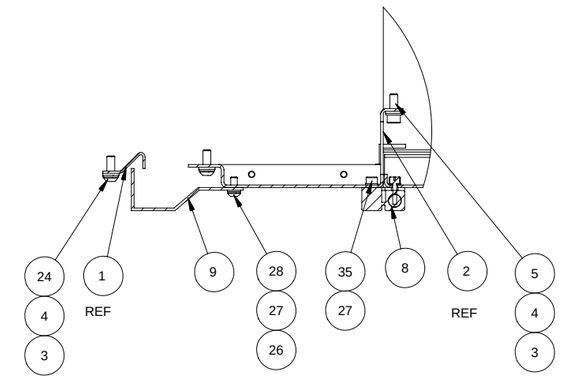


DETAIL D
SCALE 1=2

| QTY. | PART NUMBER | ITEM DESCRIPTION | ITEM |
|---|---|---|---|

PARTS LIST

| REV | E.C.N. NO. | REVISION DESCRIPTION | REV BY | DATE | CHK BY | DATE | APPD BY | DATE |
|---|---|---|---|---|---|---|---|---|
| A | 15484 | ORIGINAL RELEASE | | | | | | |

SURFACE TREATMENT: NONE
HEAT TREATMENT: NONE
FIRST USED ON: VM1

EXCEPT AS NOTED: ALL CORNERS MUST BE AS FOLLOWS
INSIDE: 1.3 X 45° OR 1.3 R MAX
OUTSIDE: 0.8 X 45° OR 1.3 R

EXCEPT AS NOTED: ALL DIMENSIONS IN METRIC TOLERANCE
DECIMAL: .0 ±0.8; .00 ±0.4; .000 ±0.13; .0000 ±0.013; ANGULAR ±5°30'

EXCEPT AS NOTED: WELDING TOLERANCE MUST BE AS FOLLOWS ±3

HURCO COMPANIES, INC.
INDIANAPOLIS, IN U.S.A.

DESCRIPTION: ASS'Y, Z AXIS COVER

| DRAWN | DATE | CHECKED | DATE | APPROVED | DATE |
|---|---|---|---|---|---|
| KEN | 07-15-02 | MLE | 07-17-02 | JLW | 09-17-02 |

| SCALE | SIZE | DRAWING | SHT. | REV. |
|---|---|---|---|---|
| 1:4 | D | 003-0101-003 | 2 OF 2 | A |

UNIT OF MEAS.: PC

# Ass'y., Pneumatic System, 003-0101-006—Rev. A

| SIZE | DRAWING | SHT. | REV. |
|---|---|---|---|
| D | 003-0101-006EX | 1 OF 1 | A |

PROPRIETARY INFORMATION

INFORMATION CONTAINED HEREIN IS THE PROPERTY OF HURCO COMPANIES, INC. NO REPRODUCTION OR DISCLOSURE OF THIS INFORMATION SHALL BE MADE BY THE RECIPIENT TO ANY OTHER PERSON OR ORGANIZATION WITHOUT THE PRIOR WRITTEN CONSENT OF HURCO COMPANIES, INC.

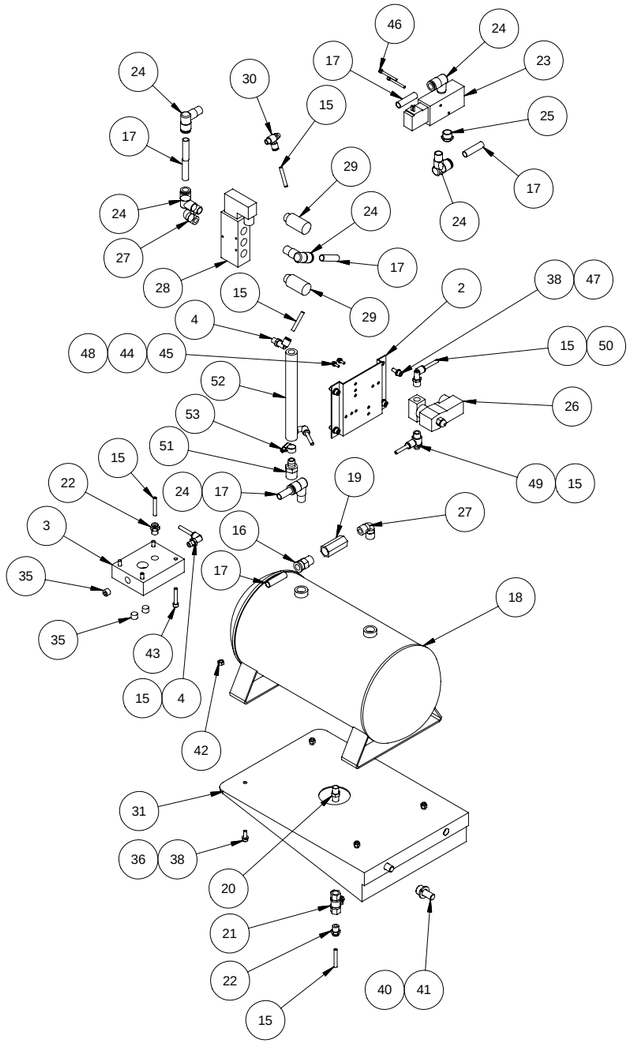


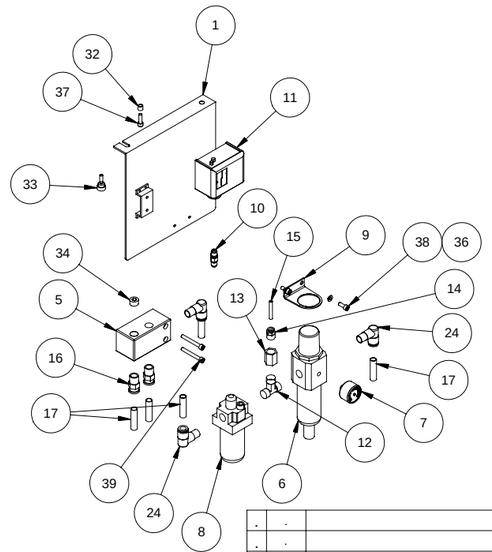


| ITEM | QTY. | PART NO. | DESCRIPTION |
|---|---|---|---|
| 53 | 1 | 602-0002-022 | CLAMP, HOSE, 15/16" - 1 1/2" |
| 52 | <150 IN>------ 1 | 507-0001-014 | HOSE, WATER, PVC, 1/2 |
| 51 | 1 | 506-6052-059 | ADAPTOR, STRAIGHT 1/2"PT X 1/2"H |
| 50 | 1 | 506-3009-048 | ELBOW, MALE, 6.0 TUBE x 1/4" PT M |
| 49 | 1 | 502-0027-006 | CONTROL, FLOW, 6.0 DIA TUBE x 1/4" PT M |
| 48 | 2 | 101-5021-005 | SHCS, M 4 X 0.7 P X 12 LG |
| 47 | 4 | 110-5001-004 | WASHER, FLAT, M6 |
| 46 | 2 | 101-5021-013 | SHCS, M 4 X 0.7 P X 40 LG |
| 45 | 4 | 110-0046-005 | LOCKWASHER, M4, HELICAL SPRING |
| 44 | 4 | 110-5001-002 | WASHER, FLAT, M4 |
| 43 | 4 | 101-5008-010 | SHCS, M 6 X 1.0 P X 35 LG |
| 42 | 4 | 117-5013-001 | NUT, HEX, M6 x 1.0P |
| 41 | 2 | 101-5012-002 | SHCS, M12 X 1.75 P X 25 LG |
| 40 | 2 | 110-0046-010 | LOCKWASHER, M12, HELICAL SPRING |
| 39 | 2 | 101-5008-013 | SHCS, M 6 X 1.0 P X 50 LG |
| 38 | 10 | 101-5008-004 | SHCS, M 6 X 1.0 P X 16 LG |
| 37 | 1 | 101-5008-006 | SHCS, M 6 X 1.0 P X 20 LG |
| 36 | 11 | 110-0046-007 | LOCKWASHER, M6, HELICAL SPRING |
| 35 | 3 | 506-6058-006 | PLUG, SOCKET, PT 1/4" |
| 34 | 1 | 506-6058-003 | PLUG, 3/8" PT |
| 33 | 1 | 803-0106-016 | SCREW, KNURLED THUMB |
| 32 | 1 | 803-1042-055 | SPACER, CABINET DOOR BAR |
| 31 | 1 | 803-0101-019 | BRACKET, ACCUMLULATOR |
| 30 | 1 | 502-0027-015 | CONTROL, FLOW, 6.0 DIA TUBE x 1/8" PT M |
| 29 | 2 | 503-0502-020 | MUFFLER, EXHAUST 3/8" PT M |
| 28 | 1 | 403-6001-015 | VALVE, SOLENOID |
| 27 | 2 | 506-6051-080 | ELBOW, STREET 90, 3/8" PT M x 3/8" PT M |
| 26 | 1 | 403-6001-014 | VALVE, SOLENOID, PURGE & AIR BLAST |
| 25 | 1 | 503-0502-019 | MUFFLER, 3/8" PT, SHORT |
| 24 | 9 | 506-3009-050 | ELBOW, MALE, 3/8" PT M x 12.0 O.D TUBE |
| 23 | 1 | 502-0001-009 | VALVE, SOL. 3-PORT 2 POSTION |
| 22 | 2 | 506-3001-054 | ADAPTER, 1/4" PT M x 6.0 O.D. TUBE |
| 21 | 1 | 502-0129-016 | VALVE, SHUT-OFF |
| 20 | 1 | 506-6050-003 | NIPPLE, HEX, 1/4" PT M |
| 19 | 1 | 502-0130-017 | CHECK VALVE, INLINE 3/8" PT F |
| 18 | 1 | 512-0041-004 | TANK, PRESSURE |
| 17 | <20 FT>-------12 | 508-2001-011 | TUBING, 12 MM O.D. NYLON |
| 16 | 3 | 506-3001-050 | ADAPTER, STRAIGHT, 12 DIA TUBE X 3/8 PT M |
| 15 | <10 FT>------ 9 | 508-2001-010 | TUBING, 6 MM O.D. NYLON |
| 14 | 1 | 506-3001-051 | STRAIGHT ADAPTER |
| 13 | 1 | 506-5010-026 | COUPLING, 3/8" PT |
| 12 | 1 | 506-3014-018 | TEE, 3/8" PT MALE |
| 11 | 1 | 510-0001-008 | SWITCH, PRESSURE |
| 10 | 1 | 506-6052-051 | BUSHING, 3/8" PT x 7/16-20 UNF |
| 9 | 1 | 513-5004-014 | BRACKET, FILTER/REGULAOR |
| 8 | 1 | 513-0121-004 | LUBRICATOR |
| 7 | 1 | 514-5001-007 | GAUGE, PRESSURE (G36-10-01-x7) |
| 6 | 1 | 513-0444-004 | AIR FILTER/REGULATOR |
| 5 | 1 | 803-1029-001 | BLOCK, PNEUMATIC |
| 4 | 3 | 506-3009-058 | ELBOW, MALE, 6.0 TUBE x 1/4" PT M |
| 3 | 1 | 803-0119-001 | MANIFOLD, FLOOD COOLANT |
| 2 | 1 | 803-1000-126 | PANEL, HEAD AIR |
| 1 | 1 | 803-0114-001 | PANEL, PNEUMATICA |

| REV | E.C.N. NO. | REVISION DESCRIPTION | REV BY | DATE | CHK BY | DATE | APPD BY | DATE |
|---|---|---|---|---|---|---|---|---|
| A | 15486 | ORIGINAL RELEASE | | | | | | |

SURFACE TREATMENT: NONE

HEAT TREATMENT: NONE

FIRST USED ON: VM 1

EXCEPT AS NOTED: ALL CORNERS MUST BE AS FOLLOWS — INSIDE: 1.3 X 45° OR 1.3 R MAX; OUTSIDE: 0.8 X 45° OR 1.3 R

EXCEPT AS NOTED: ALL DIMENSIONS IN METRIC TOLERANCE DECIMAL .0 ±0.8; .00 ±0.4; .000 ±0.13; .0000 ±0.013; ANGULAR ±1°30'

EXCEPT AS NOTED: WELDING TOLERANCE MUST BE AS FOLLOWS ±3

HURCO COMPANIES, INC. INDIANAPOLIS, IN U.S.A.

DESCRIPTION: ASS'Y, PNEUMATIC SYSTEM

| DRAWN | DATE | CHECKED | DATE | APPROVED | DATE |
|---|---|---|---|---|---|
| Kevin | 06/26/02 | MLE | 06/27/02 | JLW | 09-24-02 |

SCALE: 1:20 — UNIT OF MEAS.: PC — SIZE: D — DRAWING: 003-0101-006EX — SHT. 1 OF 1 — REV. A

| SIZE | DRAWING | SHT. | REV. | PROPRIETARY INFORMATION |
|---|---|---|---|---|
| D | 003-0101-007 | 1 OF 1 | A | INFORMATION CONTAINED HEREIN IS THE PROPERTY OF HURCO COMPANIES, INC. NO REPRODUCTION OR DISCLOSURE OF THIS INFORMATION SHALL BE MADE BY THE RECIPIENT TO ANY OTHER PERSON OR ORGANIZATION WITHOUT THE PRIOR WRITTEN CONSENT OF HURCO COMPANIES, INC. |

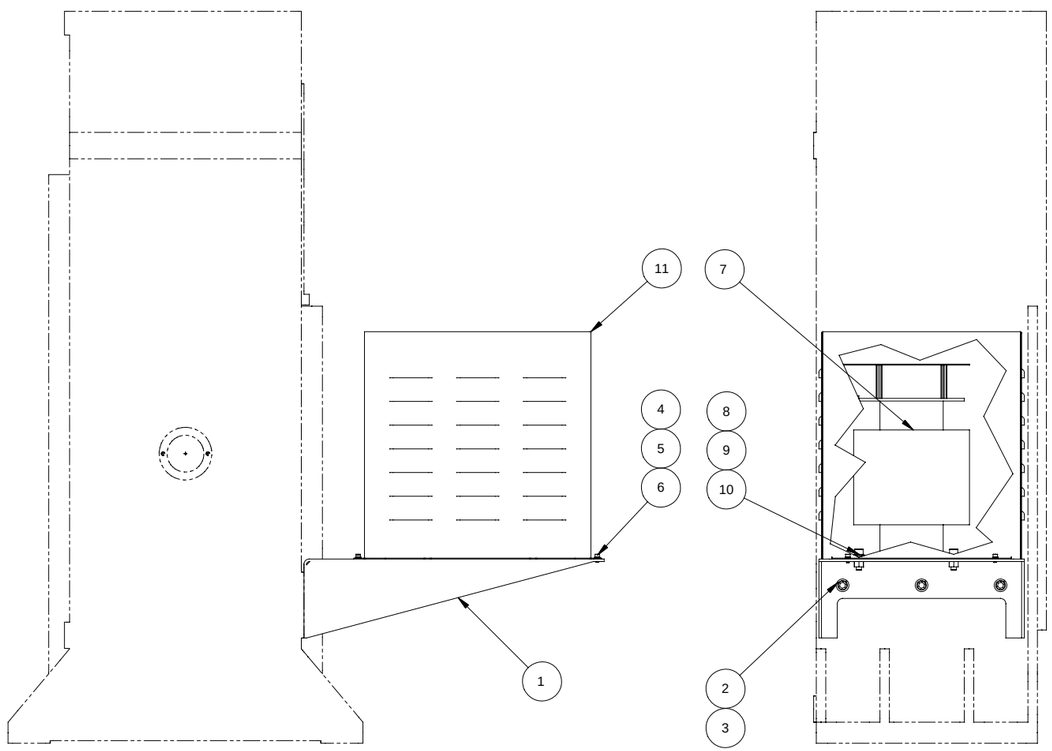


| ITEM | DESCRIPTION | PART NO. | QTY. |
|---|---|---|---|
| 11 | COVER, TRANSFORMER | 803-0102-026 | 1 |
| 10 | SHCS, M10 X 1.5 P X 30 LG | 101-5011-008 | 4 |
| 9 | LOCKWASHER, M10, HELICAL SPRING | 110-0046-009 | 4 |
| 8 | WASHER, FLAT, M10 | 110-5001-006 | 4 |
| 7 | TRANSFORMER, 12KVA | 413-0003-163 | 1 |
| 6 | SHCS, M 5 X 0.8 P X 10 LG | 101-5007-002 | 4 |
| 5 | LOCKWASHER, M5, HELICAL SPRING | 110-0046-006 | 4 |
| 4 | WASHER, FLAT, M5 | 110-5001-003 | 4 |
| 3 | SHCS, M12 X 1.75 P X 25 LG | 101-5012-002 | 3 |
| 2 | LOCKWASHER, M12, HELICAL SPRING | 110-0046-010 | 2 |
| 1 | BRACKET, TRANSFORMER | 803-0101-020 | 1 |

| REV | E.C.N. NO. | REVISION DESCRIPTION | REV BY | DATE | CHK BY | DATE | APPD BY | DATE |
|---|---|---|---|---|---|---|---|---|
| A | 15485 | ORIGINAL RELEASE | | | | | | |

SURFACE TREATMENT: NONE

HEAT TREATMENT: NONE

FIRST USED ON: VM1

EXCEPT AS NOTED: ALL CORNERS MUST BE AS FOLLOWS
INSIDE: 1.3 X 45° OR 1.3 R MAX
OUTSIDE: 0.8 X 45° OR 1.3 R

EXCEPT AS NOTED: WELDING TOLERANCE MUST BE AS FOLLOWS ±3

EXCEPT AS NOTED: ALL DIMENSIONS IN METRIC TOLERANCE
DECIMAL
.0 ±0.8
.00 ±0.4
.000 ±0.13
.0000 ±0.013
ANGULAR ±0°30'

HURCO COMPANIES, INC.
INDIANAPOLIS, IN U.S.A.

DESCRIPTION: ASS'Y, TRANSFORMER

| DRAWN | DATE | CHECKED | DATE | APPROVED | DATE |
|---|---|---|---|---|---|
| ROD | 6-28-02 | MLE | 7-01-02 | JLW | 09-23-02 |

SCALE: 1:5
UNIT OF MEAS.: PC
SIZE: D
DRAWING: 003-0101-007
SHT.: 1 OF 1
REV.: A

| SIZE | DRAWING | SHT. | REV. | PROPRIETARY INFORMATION |
|---|---|---|---|---|
| C | 003-0101-010 | 1 OF 1 | B | INFORMATION CONTAINED HEREIN IS THE PROPERTY OF HURCO COMPANIES, INC. NO REPRODUCTION OR DISCLOSURE OF THIS INFORMATION SHALL BE MADE BY THE RECIPIENT TO ANY OTHER PERSON OR ORGANIZATION WITHOUT THE PRIOR WRITTEN CONSENT OF HURCO COMPANIES, INC. |

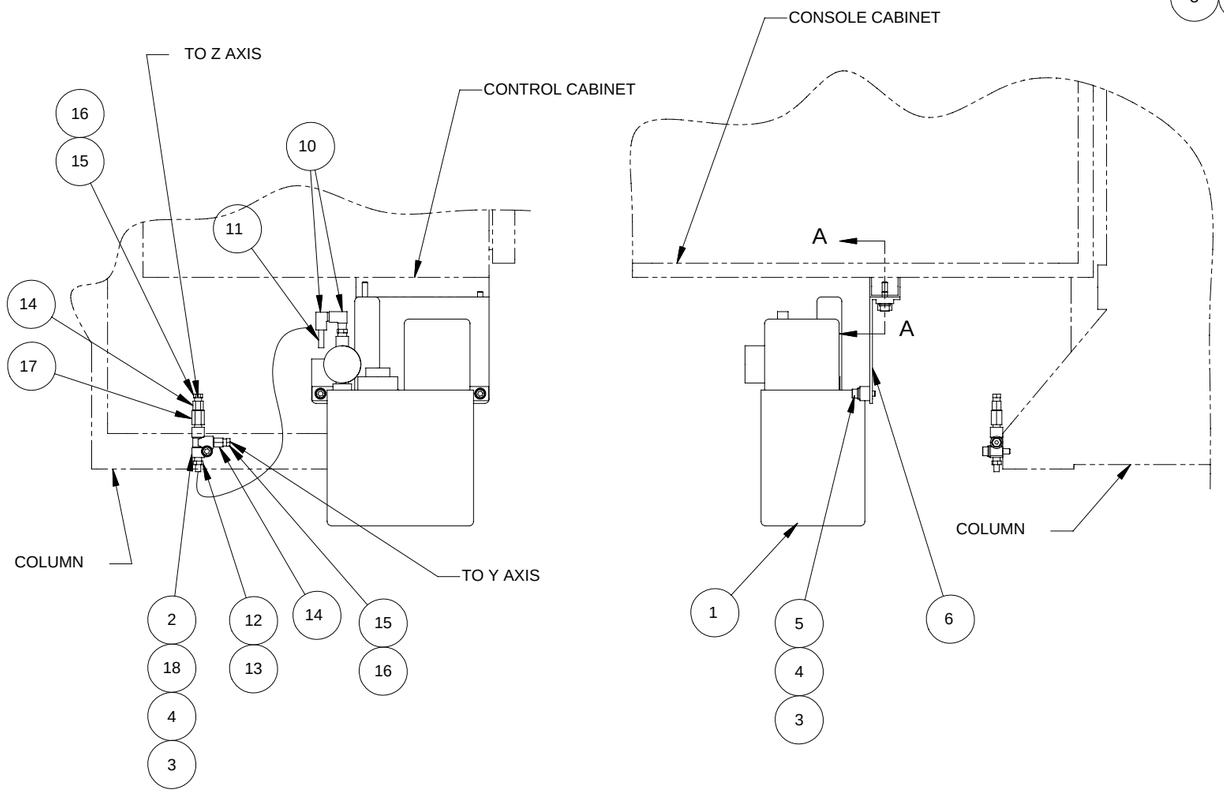


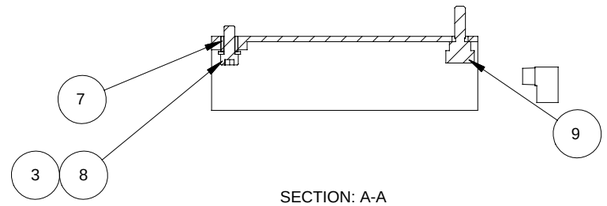


SECTION: A-A
SCALE: 1=2

| ITEM | QTY. | PART NO. | DESCRIPTION |
|---|---|---|---|
| 18 | 1 | 101-5008-008 | SHCS, M 6 X 1.0 P X 25 LG |
| 17 | 1 | 506-3001-056 | VALVE, CHECK, M8 MALE x FEM |
| 16 | 2 | 506-3023-010 | SLEEVE, 4 DIA TUBING |
| 15 | 2 | 506-3023-009 | BUSHING, 4.0 DIA TUBING x M8 |
| 14 | 2 | 506-3025-018 | ADAPTOR, STRAIGHT, M8 F x M10 M |
| 13 | 1 | 506-3023-014 | SLEEVE, 6.0 DIA TUBING |
| 12 | 1 | 506-3023-013 | BUSHING, 6.0 DIA TUBING x M10 |
| 11 | 2X ( 5" ) | 508-2001-016 | TUBING, NYLON, 6.0 MM DIA |
| 10 | 2 | 506-3025-021 | ADAPTOR, ELBOW |
| 9 | 1 | 803-0106-016 | SCREW, KNURLED THUMB |
| 8 | 1 | 101-5008-004 | SHCS, M 6 X 1.0 P X 16 LG |
| 7 | 1 | 803-1042-055 | SPACER, CABINET DOOR BAR |
| 6 | 1 | 803-0100-009 | PLATE, LUBE PUMP |
| 5 | 2 | 101-5008-006 | SHCS, M 6 X 1.0 P X 20 LG |
| 4 | 3 | 110-0046-007 | LOCKWASHER, M6, HELICAL SPRING |
| 3 | 4 | 110-5001-004 | WASHER, FLAT, M6 |
| 2 | 1 | 506-3016-015 | TEE, ADAPTOR, M8 |
| 1 | 1 | 509-0002-019 | PUMP, LUBRICATOR |

| REV | E.C.N. NO. | REVISION DESCRIPTION | REV BY | DATE | CHK BY | DATE | APPD BY | DATE |
|---|---|---|---|---|---|---|---|---|
| . | . | . | . | . | . | . | . | . |
| B | 15904 | WAS QTY 1 | SMc | 9 1 05 | PFB | 9 1 05 | PFB | 9 1 05 |
| A | 15486 | ORIGINAL RELEASE | | | | | | |

SURFACE TREATMENT: NONE

HEAT TREATMENT: NONE

FIRST USED ON: VM 1

EXCEPT AS NOTED: ALL CORNERS MUST BE AS FOLLOWS
INSIDE: 1.3 X 45° OR 1.3 R MAX
OUTSIDE: 0.8 X 45° OR 1.3 R

EXCEPT AS NOTED: WELDING TOLERANCE MUST BE AS FOLLOWS ±3

EXCEPT AS NOTED: ALL DIMENSIONS IN METRIC TOLERANCE
DECIMAL
.0 ±0.8
.00 ±0.4
.000 ±0.13
.0000 ±0.013
ANGULAR ±0°30'

THIRD ANGLE PROJECTION

HURCO COMPANIES, INC
INDIANAPOLIS, IN. U.S.A.

DESCRIPTION: ASS'Y, LUBRICATION SYSTEM

| DRAWN | DATE | CHECKED | DATE | APPROVED | DATE |
|---|---|---|---|---|---|
| JTU | 06/24/02 | MLE | 06/26/02 | JLW | 09-26-02 |

| SCALE | SIZE | DRAWING | SHT. | REV. |
|---|---|---|---|---|
| 1:4 | C | 003-0101-010 | 1 OF 1 | B |

UNIT OF MEAS.: PC

| SIZE | DRAWING | SHT. | REV. |
|---|---|---|---|
| D | 003-0101-011 | 1 OF 1 | B |

**PROPRIETARY INFORMATION**

INFORMATION CONTAINED HEREIN IS THE PROPERTY OF HURCO COMPANIES, INC. NO REPRODUCTION OR DISCLOSURE OF THIS INFORMATION SHALL BE MADE BY THE RECIPIENT TO ANY OTHER PERSON OR ORGANIZATION WITHOUT THE PRIOR WRITTEN CONSENT OF HURCO COMPANIES, INC.

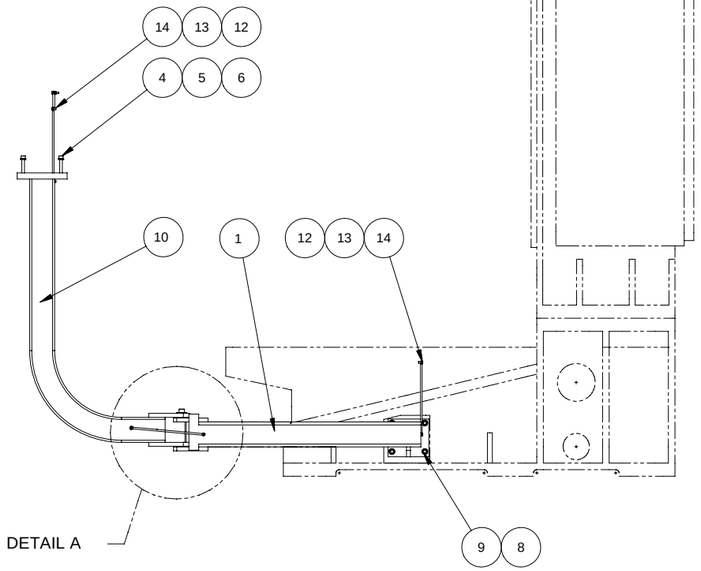


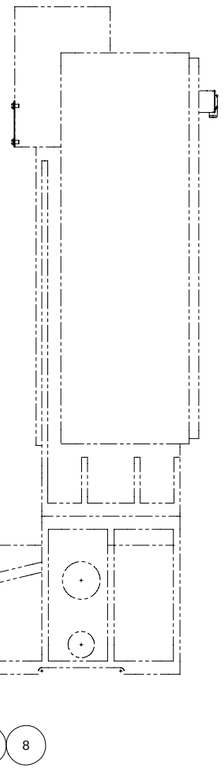

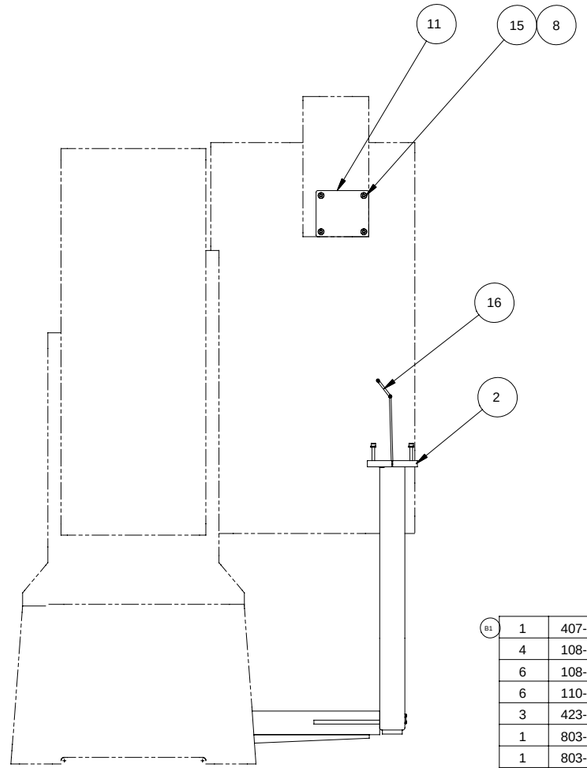


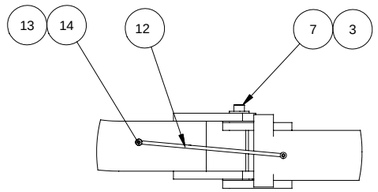


DETAIL A
SCALE 1:4

| B1 | | | | |
|---|---|---|---|---|
| | 1 | 407-0001-110 | ASSY, ELECTRICAL CONSOLE ISOLATION | 16 |
| | 4 | 108-5006-001 | BHSCS, M10 X 1.5 P X 16 LG | 15 |
| | 6 | 108-5003-003 | BHSCS, M 5 X 0.8 P X 10 LG | 14 |
| | 6 | 110-0046-006 | LOCKWASHER, M5, HELICAL SPRING | 13 |
| | 3 | 423-4401-553 | HARNESS, GROUND STRAP, EMI BRAID | 12 |
| | 1 | 803-0102-018 | COVER, HOUSINS, Z AXIS CABLE | 11 |
| | 1 | 803-1024-011 | ARM, PENDANT | 10 |
| | 4 | 101-5011-008 | SHCS, M10 X 1.5 P X 30 LG | 9 |
| | 8 | 110-0046-009 | LOCKWASHER, M10, HELICAL SPRING | 8 |
| | 1 | 101-5011-005 | SHCS, M10 X 1.5 P X 20 LG | 7 |
| | 4 | 110-5001-005 | WASHER, FLAT, M8 | 6 |
| | 4 | 110-0046-008 | LOCKWASHER, M8, HELICAL SPRING | 5 |
| | 4 | 101-5010-013 | SHCS, M 8 X 1.25 P X 55 LG | 4 |
| | 1 | 803-6006-015 | WASHER, PENDANT ARM | 3 |
| | 1 | 803-1000-016 | PLATE, CONSOLE SWIVEL | 2 |
| | 1 | 803-0101-021 | BRACKET, PENDANT ARM MOUNTING | 1 |
| | QTY. | PART NO. | DESCRIPTION | ITEM |

| REV | E.C.N. NO. | REVISION DESCRIPTION | REV BY | DATE | CHK BY | DATE | APPD BY | DATE |
|---|---|---|---|---|---|---|---|---|
| B | 15517 | (1) ADDED ITEM 16 | ROD | 7 25 02 | MLE | 8 27 02 | JLW | 10-03 2002 |
| A | 15485 | ORIGINAL RELEASE | | | | | | |

SURFACE TREATMENT: NONE

HEAT TREATMENT: NONE

FIRST USED ON: VM1

EXCEPT AS NOTED: ALL CORNERS MUST BE AS FOLLOWS
INSIDE: 1.3 X 45° OR 1.3 R MAX
OUTSIDE: 0.8 X 45° OR 1.3 R

EXCEPT AS NOTED: WELDING TOLERANCE MUST BE AS FOLLOWS ±3

EXCEPT AS NOTED: ALL DIMENSIONS IN METRIC TOLERANCE
DECIMAL
.0 ±0.8
.00 ±0.4
.000 ±0.13
.0000 ±0.013
ANGULAR ±0°30'

HURCO COMPANIES, INC.
INDIANAPOLIS, IN U.S.A.

DESCRIPTION: ASS'Y, PENDANT

| DRAWN | DATE | CHECKED | DATE | APPROVED | DATE |
|---|---|---|---|---|---|
| ROD | 7-03-02 | MLE | 7-05-02 | JLW | 09-23-02 |

| SCALE | SIZE | DRAWING | SHT. | REV. |
|---|---|---|---|---|
| 1:8 | D | 003-0101-011 | 1 OF 1 | B |

UNIT OF MEAS.: PC

# Ass'y., Decal Location, 003-0101-012—Rev. A

| SIZE | DRAWING | SHT. | REV. | PROPRIETARY INFORMATION |
|---|---|---|---|---|
| D | 003-0101-012 | 1 OF 1 | A | INFORMATION CONTAINED HEREIN IS THE PROPERTY OF HURCO COMPANIES, INC. NO REPRODUCTION OR DISCLOSURE OF THIS INFORMATION SHALL BE MADE BY THE RECIPIENT TO ANY OTHER PERSON OR ORGANIZATION WITHOUT THE PRIOR WRITTEN CONSENT OF HURCO COMPANIES, INC. |

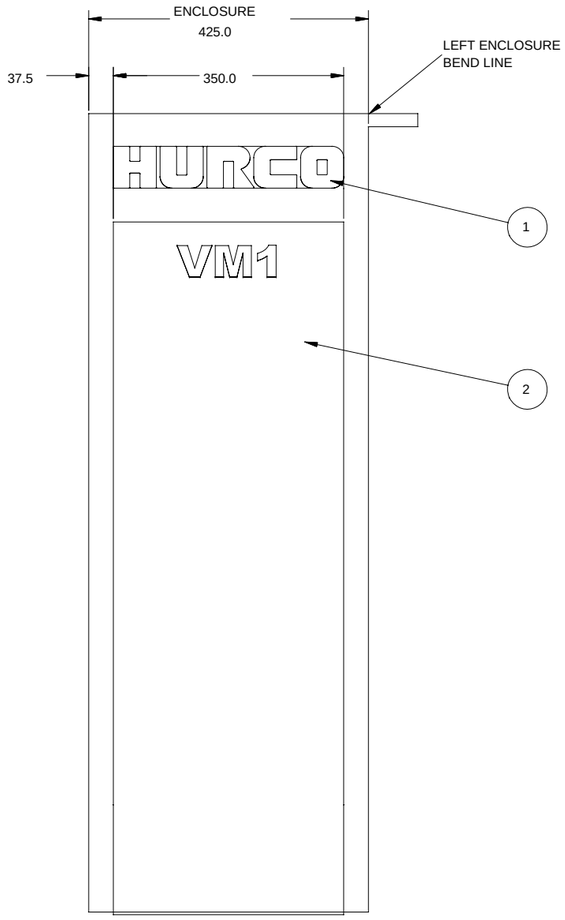


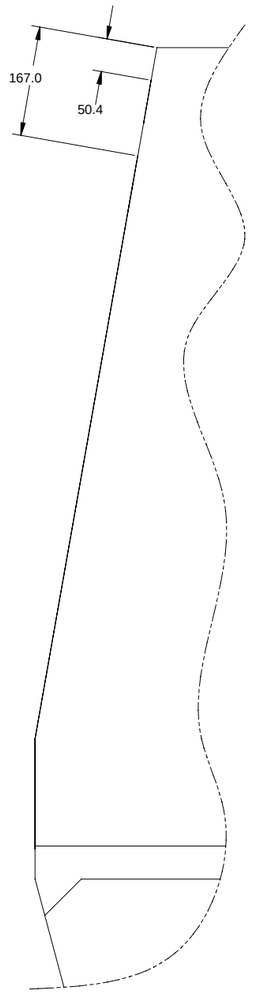


| QTY. | PART NO. | DESCRIPTION | ITEM |
|---|---|---|---|
| 1 | 803-0117-002 | DECAL, VM 1 | 2 |
| 1 | 803-0117-004 | DECAL, HURCO | 1 |

| REV | E.C.N. NO. | REVISION DESCRIPTION | REV BY | DATE | CHK BY | DATE | APPD BY | DATE |
|---|---|---|---|---|---|---|---|---|
| A | 15486 | ORIGINAL RELEASE | | | | | | |

SURFACE TREATMENT: NONE

HEAT TREATMENT: NONE

FIRST USED ON: VM 1

EXCEPT AS NOTED: ALL CORNERS MUST BE AS FOLLOWS
INSIDE: 1.3 X 45° OR 1.3 R MAX
OUTSIDE: 0.8 X 45° OR 1.3 R

EXCEPT AS NOTED: WELDING TOLERANCE MUST BE AS FOLLOWS
±3

EXCEPT AS NOTED: ALL DIMENSIONS IN METRIC TOLERANCE
DECIMAL
.0 ±0.8
.00 ±0.4
.000 ±0.13
.0000 ±0.013
ANGULAR ±0°30'

HURCO COMPANIES, INC.
INDIANAPOLIS, IN U.S.A.

DESCRIPTION: ASS'Y, DECAL LOCATION

| DRAWN | DATE | CHECKED | DATE | APPROVED | DATE |
|---|---|---|---|---|---|
| JTU | 06/24/02 | MLE | 06/26/02 | JLW | 09-26-02 |

| SCALE | SIZE | DRAWING | SHT. | REV. |
|---|---|---|---|---|
| 1:4 | D | 003-0101-012 | 1 OF 1 | A |

UNIT OF MEAS.: PC

| SIZE | DRAWING | SHT. | REV. |
|---|---|---|---|
| D | 003-0101-015<br>003-0101-019 | 1 OF 1 | A |

PROPRIETARY INFORMATION
INFORMATION CONTAINED HEREIN IS THE PROPERTY OF HURCO MANUFACTURING COMPANY, INC. NO REPRODUCTION OR DISCLOSURE OF THIS INFORMATION SHALL BE MADE BY THE RECIPIENT TO ANY OTHER PERSON OR ORGANIZATION WITHOUT THE PRIOR WRITTEN CONSENT OF HURCO MANUFACTURING COMPANY, INC.

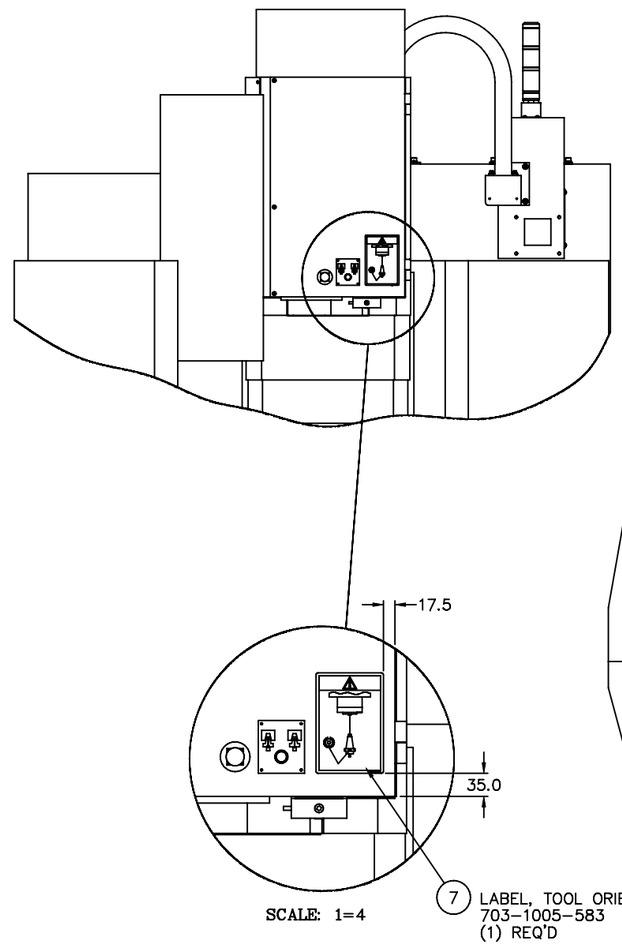


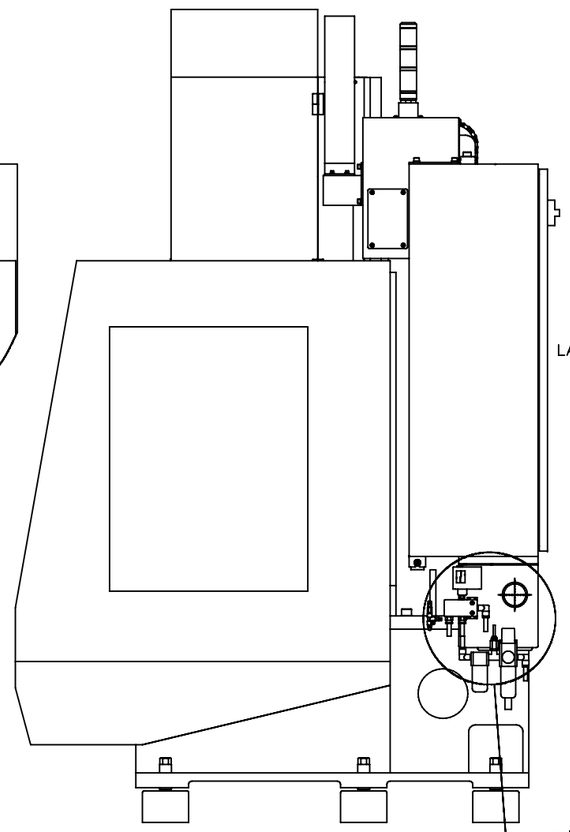

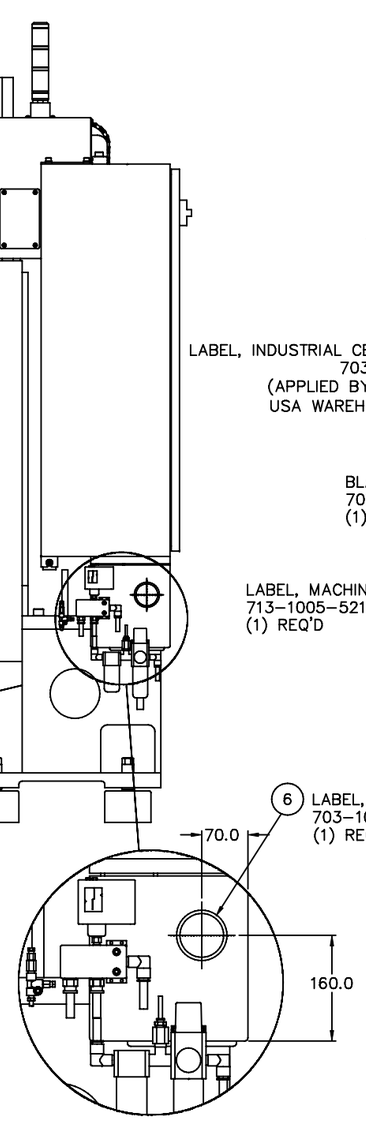


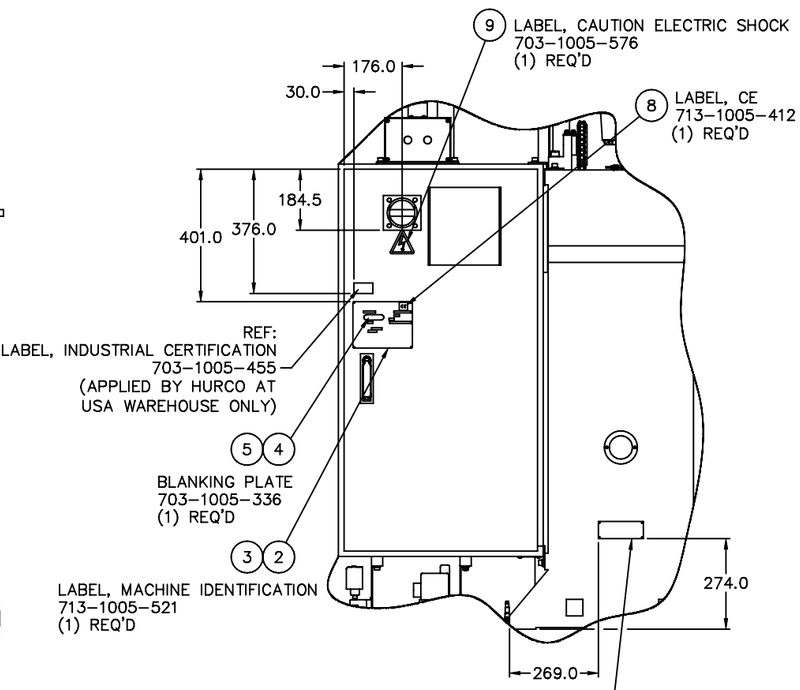





| QTY. NCE -019 | QTY. CE -015 | PART NUMBER | ITEM DESCRIPTION | ITEM |
|---|---|---|---|---|
| 1 | 1 | 703-1005-576 | LABEL, CAUTION ELECTRIC SHOCK | 9 |
| – | 1 | 703-1005-412 | LABEL, CE | 8 |
| 1 | 1 | 703-1005-583 | LABEL, TOOL ORIENT | 7 |
| 1 | 1 | 703-1005-585 | LABEL, CONSULT SERVICE MANUAL | 6 |
| 2 | 2 | 119-0004-004 | SCREW, M3.5 X 6.35 LG DRIVE | 5 |
| 1 | 1 | 703-1005-336 | BLANKING PLATE | 4 |
| 1 | 1 | 703-1005-521 | LABEL, MACHINE IDENTIFICATION | 3 |
| 8 | 8 | 111-0241-008 | POP RIVET, 3/32" DIA X 1/4" NOM | 2 |
| 1 | 1 | 713-0050-289 | TAG, I.D. / MFG. NUMBER | 1 |

PARTS LIST

| REV | P.I.N. NO. | REVISION DESCRIPTION | REV BY | DATE | CHK BY | DATE | APPD BY | DATE |
|---|---|---|---|---|---|---|---|---|
| A | 15486 | REL | | | | | | |

SURFACE TREATMENT ~
HEAT TREATMENT ~
FIRST USED ON VM 1

EXCEPT AS NOTED: ALL CORNERS MUST BE AS FOLLOWS
INSIDE: 1.3 X 45° OR 1.3 R MAX
OUTSIDE: 0.8 X 45° OR 1.3 R

EXCEPT AS NOTED: ALL DIMENSIONS IN METRIC TOLERANCE
DECIMAL .0 ±0.8, .00 ±0.4, .000 ±0.13, .0000 ±0.013
ANGULAR ± 0°30'

EXCEPT AS NOTED: WELDING TOLERANCE MUST BE AS FOLLOWS ±3

THIRD ANGLE PROJECTION

HURCO MANUFACTURING COMPANY, INC.
INDIANAPOLIS, IN U.S.A.

DESCRIPTION: ASS'Y, WARNING AND INSTRUCTION LABELS AND LOCATION

| DRAWN | DATE | CHECKED | DATE | APPROVED | DATE |
|---|---|---|---|---|---|
| JTU | 07-15-02 | MLE | 07-16-02 | JLW | 09-26-02 |

SCALE 1=8 | UNIT OF MEAS. EA | SIZE D | DRAWING 003-0101-015, 003-0101-019 | SHT. 1 OF 1 | REV. A

| SIZE | DRAWING | SHT. | REV. | PROPRIETARY INFORMATION |
|---|---|---|---|---|
| D | 003-0101-020 | 1 OF 2 | A | INFORMATION CONTAINED HEREIN IS THE PROPERTY OF HURCO COMPANIES, INC. NO REPRODUCTION OR DISCLOSURE OF THIS INFORMATION SHALL BE MADE BY THE RECIPIENT TO ANY OTHER PERSON OR ORGANIZATION WITHOUT THE PRIOR WRITTEN CONSENT OF HURCO COMPANIES, INC. |

SEE SHEET:2

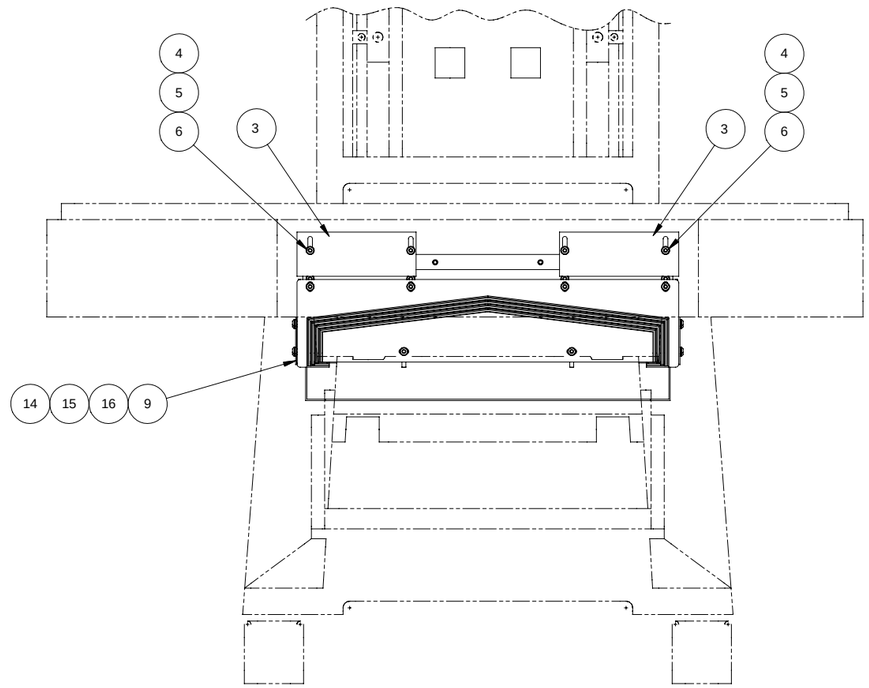


| ITEM | QTY. | PART NO. | DESCRIPTION |
|---|---|---|---|
| 17 | 1 | 803-0102-036 | COVER, Y-AXIS SPRING |
| 16 | 8 | 108-5003-003 | BHSCS, M 5 X 0.8 P X 10 LG |
| 15 | 8 | 110-0046-006 | LOCKWASHER, M5, HELICAL SPRING |
| 14 | 8 | 110-5001-003 | WASHER, FLAT, M5 |
| 13 | 4 | 101-5008-004 | SHCS, M 6 X 1.0 P X 16 LG |
| 12 | 1 | 803-0106-029 | GASKET, Y-AXIS REAR COLUMN COVER |
| 11 | 1 | 803-0102-035 | COVER, Y-AXIS REAR BALLSCREW |
| 10 | 1 | 803-0106-010 | GASKET, Y SADDLE COVER, REAR |
| 9 | 1 | 803-0102-006 | COVER, Y BEARING BLOCK, LEFT |
| 8 | 1 | 803-0102-007 | COVER, Y BEARING BLOCK, RIGHT |
| 7 | 1 | 803-0106-007 | GASKET, Y COVER, FRONT |
| 6 | 28 | 108-5004-004 | BHSCS, M 6 X 1.0 P 16 LG |
| 5 | 32 | 110-0046-007 | LOCKWASHER, M6, HELICAL SPRING |
| 4 | 28 | 110-5001-004 | WASHER, FLAT, M6 |
| 3 | 4 | 803-0102-017 | COVER, SADDLE |
| 2 | 1 | 803-0102-034 | COVER, Y-AXIS FRONT WAY |
| 1 | 2 | 803-0101-014 | BRACKET, Y WAY COVER SUPPORT, FRONT |

| REV | E.C.N. NO. | REVISION DESCRIPTION | REV BY | DATE | CHK BY | DATE | APPD BY | DATE |
|---|---|---|---|---|---|---|---|---|
| A | 15606 | ORIGINAL RELEASE | | | | | | |

SURFACE TREATMENT: NONE

HEAT TREATMENT: NONE

FIRST USED ON: VM1

EXCEPT AS NOTED: ALL CORNERS MUST BE AS FOLLOWS
INSIDE: 1.3 X 45° OR 1.9 R MAX
OUTSIDE: 0.8 X 45° OR 1.3 R

EXCEPT AS NOTED: WELDING TOLERANCE MUST BE AS FOLLOWS ±3

EXCEPT AS NOTED: ALL DIMENSIONS IN METRIC TOLERANCE
DECIMAL: .0 ±0.8; .00 ±0.4; .000 ±0.13; .0000 ±0.013; ANGULAR ±1°30'

HURCO COMPANIES, INC.
INDIANAPOLIS, IN U.S.A.

DESCRIPTION: ASS'Y, Y-AXIS WAY COVER

| DRAWN | DATE | CHECKED | DATE | APPROVED | DATE |
|---|---|---|---|---|---|
| Kevin | 01-20-03 | MLE | 01-20-03 | JLW | 5-23-03 |

SCALE: 1:4
UNIT OF MEAS.: PC
SIZE: D
DRAWING: 003-0101-020
SHT. 1 OF 2
REV. A

| SIZE | DRAWING | SHT. | REV. |
|---|---|---|---|
| D | 003-0101-020 | 2 OF 2 | A |

PROPRIETARY INFORMATION

INFORMATION CONTAINED HEREIN IS THE PROPERTY OF HURCO COMPANIES, INC. NO REPRODUCTION OR DISCLOSURE OF THIS INFORMATION SHALL BE MADE BY THE RECIPIENT TO ANY OTHER PERSON OR ORGANIZATION WITHOUT THE PRIOR WRITTEN CONSENT OF HURCO COMPANIES, INC.

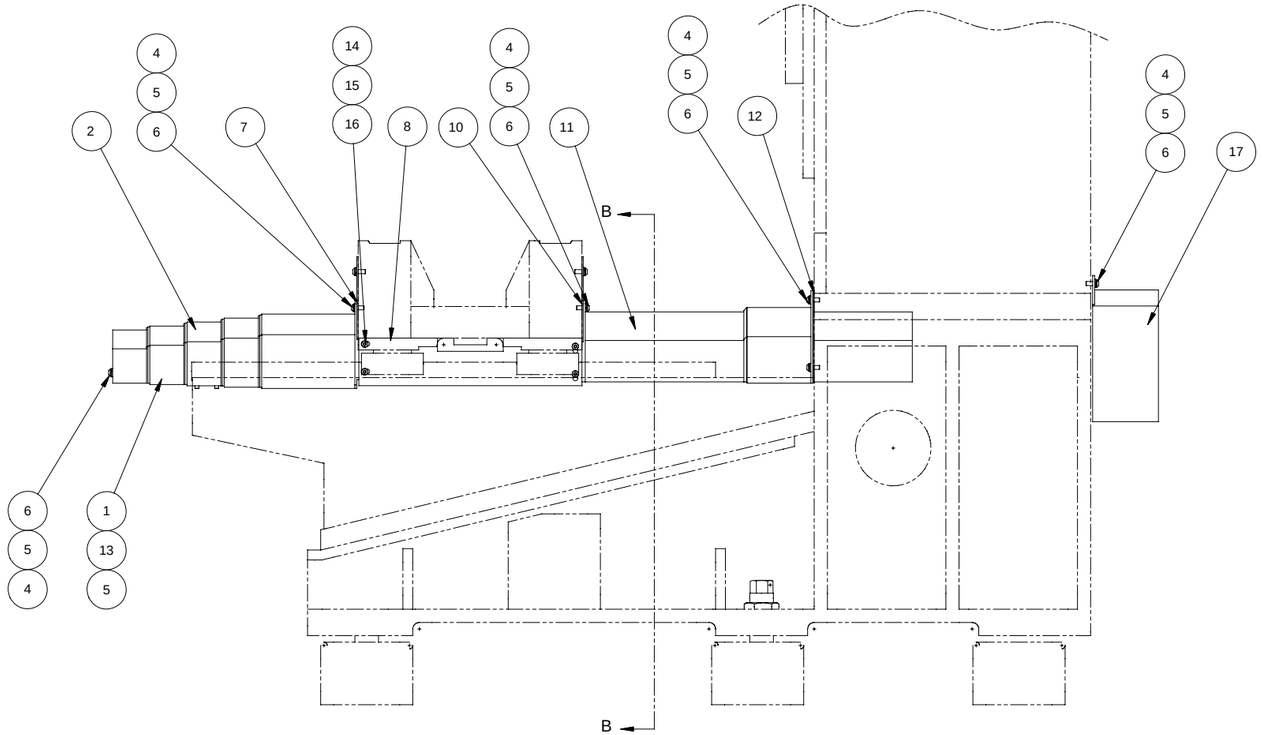


VIEW: A-A
FROM SHEET:1

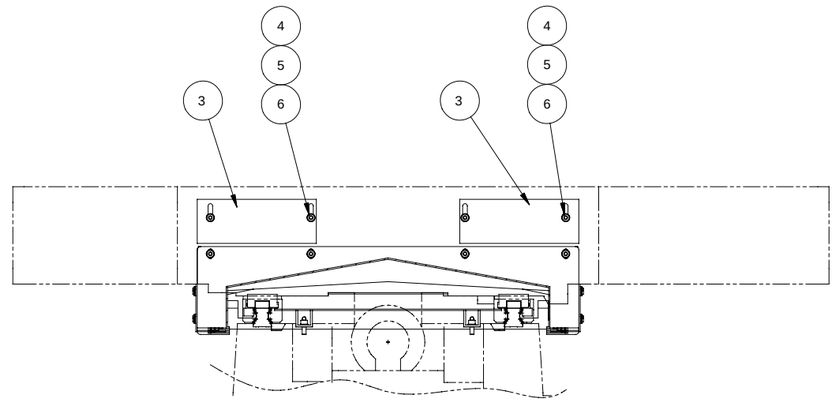


SECTION: B-B

| REV | E.C.N. NO. | REVISION DESCRIPTION | REV BY | DATE | CHK BY | DATE | APPD BY | DATE |
|---|---|---|---|---|---|---|---|---|
| A | 15606 | ORIGINAL RELEASE | | | | | | |

SURFACE TREATMENT: NONE

HEAT TREATMENT: NONE

FIRST USED ON: VM1

EXCEPT AS NOTED: ALL CORNERS MUST BE AS FOLLOWS
INSIDE: 1.3 X 45° OR 1.3 R MAX
OUTSIDE: 0.8 X 45° OR 1.3 R

EXCEPT AS NOTED: ALL DIMENSIONS IN METRIC TOLERANCE
DECIMAL
.0 ±0.8
.00 ±0.4
.000 ±0.13
.0000 ±0.013
ANGULAR ±0°30'

EXCEPT AS NOTED: WELDING TOLERANCE MUST BE AS FOLLOWS
±3

HURCO COMPANIES, INC.
INDIANAPOLIS, IN U.S.A.

DESCRIPTION: ASS'Y, Y-AXIS WAY COVER

| DRAWN | DATE | CHECKED | DATE | APPROVED | DATE |
|---|---|---|---|---|---|
| Kevin | 01-20-03 | MLE | 01-20-03 | JLW | 5-23-03 |

SCALE: 1:4
UNIT OF MEAS.: PC
SIZE: D
DRAWING: 003-0101-020
SHT.: 2 OF 2
REV.: A

# Ass'y., Base, VM1, 003-0102-001—Rev. A

| SIZE | DRAWING | SHT. | REV. | PROPRIETARY INFORMATION |
|---|---|---|---|---|
| D | 003-0102-001 | 1 OF 1 | A | INFORMATION CONTAINED HEREIN IS THE PROPERTY OF HURCO COMPANIES, INC. NO REPRODUCTION OR DISCLOSURE OF THIS INFORMATION SHALL BE MADE BY THE RECIPIENT TO ANY OTHER PERSON OR ORGANIZATION WITHOUT THE PRIOR WRITTEN CONSENT OF HURCO COMPANIES, INC. |

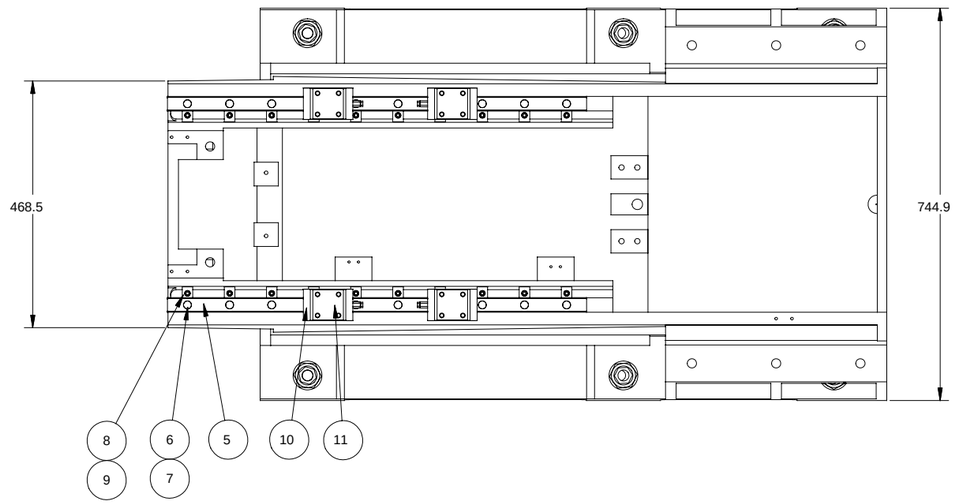


| QTY. | PART NO. | DESCRIPTION | ITEM |
|---|---|---|---|
| 4 | 506-3023-009 | BUSHING, 4.0 DIA TUBING x M8 | 14 |
| 4 | 506-3023-010 | SLEEVE, 4 DIA TUBING | 13 |
| 4 | 506-3025-014 | ADAPTOR, STR, M8 F x M6 M | 12 |
| 4 | 803-0100-001 | SPACER, GUIDE, LINEAR | 11 |
| 4 | 211-1100-107 | GUIDE, LINEAR | 10 |
| 20 | 101-5008-004 | SHCS, M 6 X 1.0 P X 16 LG | 9 |
| 20 | 803-1053-001 | GIB, RAIL | 8 |
| 20 | 408-8001-063 | PLUG, RAIL, 15.0 DIA | 7 |
| 20 | 101-5010-009 | SHCS, M 8 X 1.25 P X 35 LG | 6 |
| 2 | 211-1100-108 | RAIL, LINEAR | 5 |
| 6 | 803-1010-001 | NUT, M36 x 2.0 P | 4 |
| 6 | 803-0106-013 | BOLT, M36 X 2.0 P X 115 LG | 3 |
| 6 | 803-1019-007 | PAD, LEVELING | 2 |
| 1 | 803-0104-001 | BASE, MACHINING, VM1 | 1 |

| REV | E.C.N. NO. | REVISION DESCRIPTION | REV BY | DATE | CHK BY | DATE | APPD BY | DATE |
|---|---|---|---|---|---|---|---|---|
| A | 15483 | REL | | | | | | |

SURFACE TREATMENT: NONE

HEAT TREATMENT: NONE

FIRST USED ON: VM1

EXCEPT AS NOTED: ALL CORNERS MUST BE AS FOLLOWS
INSIDE: 1.3 X 45° OR 1.3 R MAX
OUTSIDE: 0.8 X 45° OR 1.3 R

EXCEPT AS NOTED: ALL DIMENSIONS IN METRIC TOLERANCE
DECIMAL
.0 ±0.8
.00 ±0.4
.000 ±0.13
.0000 ±0.013
ANGULAR ±1°30'

EXCEPT AS NOTED: WELDING TOLERANCE MUST BE AS FOLLOWS
±3

HURCO COMPANIES, INC.
INDIANAPOLIS, IN U.S.A.

DESCRIPTION: ASSY, BASE, VM1

| DRAWN | DATE | CHECKED | DATE | APPROVED | DATE |
|---|---|---|---|---|---|
| KEN | 06-11-02 | MLE | 06-14-02 | JLW | 09-04-02 |

SCALE: 1:5
UNIT OF MEAS.: PC
SIZE: D
DRAWING: 003-0102-001
SHT. 1 OF 1
REV. A

| SIZE | DRAWING | SHT. | REV. |
|---|---|---|---|
| D | 003-0102-002 | 1 OF 2 | A |

PROPRIETARY INFORMATION

INFORMATION CONTAINED HEREIN IS THE PROPERTY OF HURCO COMPANIES, INC. NO REPRODUCTION OR DISCLOSURE OF THIS INFORMATION SHALL BE MADE BY THE RECIPIENT TO ANY OTHER PERSON OR ORGANIZATION WITHOUT THE PRIOR WRITTEN CONSENT OF HURCO COMPANIES, INC.

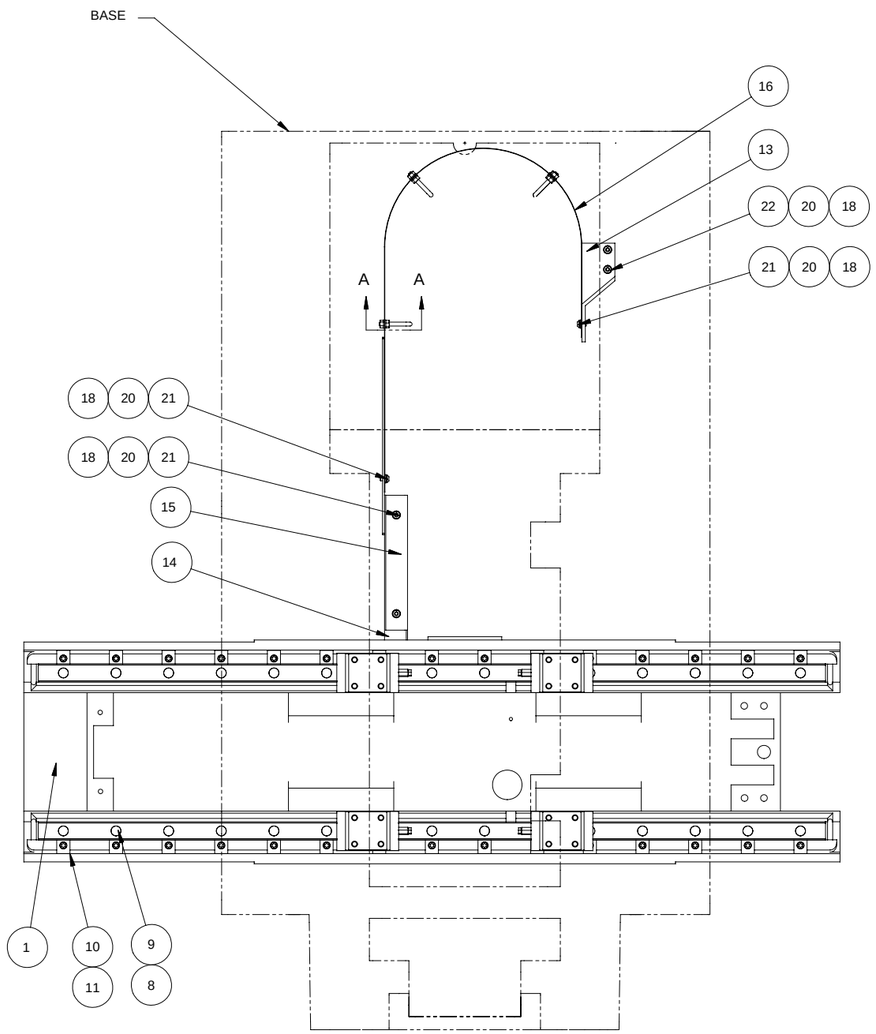


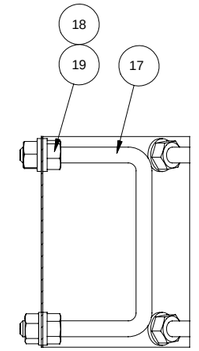


SECTION A-A
SCALE 1=1

| ITEM | DESCRIPTION | PART NO. | QTY. |
|---|---|---|---|
| 29 | TUBING, NYLON, 4.0 MM DIA. | 508-2001-009 | ~~5~~ 4M |
| 28 | SADDLE, TIE MOUNT | 712-0003-003 | 4 |
| 27 | ELBOW, STREET, M8 M X M8 F | 506-3025-019 | 2 |
| 26 | NUT, 4.0 DIA TUBING x M8 | 506-3018-002 | 5 |
| 25 | METERING UNIT, (#PV1) | 506-3024-023 | 5 |
| 24 | SHCS, M 6 X 1.0 P X 30 LG | 101-5008-009 | 2 |
| 23 | DISTRIBUTOR, 7 PORT, M8 | 502-7001-027 | 1 |
| 22 | BHSCS, M 6 X 1.0 P 16 LG | 108-5004-004 | 2 |
| 21 | BHSCS, M 6 X 1.0 P X 10 LG | 108-5004-001 | 10 |
| 20 | LOCKWASHER, M6, HELICAL SPRING | 110-0046-007 | 12 |
| 19 | NUT, HEX, M6 x 1.0P | 117-5013-001 | 12 |
| 18 | WASHER, FLAT, M6 | 110-5001-004 | 24 |
| 17 | BRACKET, CABLE | 803-0101-007 | 3 |
| 16 | PLATE, Y AXIS SPRING | 803-0100-002 | 1 |
| 15 | COVER, CABLE, Y AXIS | 803-0102-001 | 1 |
| 14 | SUPPORT, CABLE,Y AXIS | 803-0101-006 | 1 |
| 13 | BRACKET, SPRING, Y AXIS | 803-0101-001 | 1 |
| 12 | SHCS, M 8 X 1.25 P X 65 LG | 101-5010-015 | 16 |
| 11 | SHCS, M 6 X 1.0 P X 16 LG | 101-5008-004 | 36 |
| 10 | GIB, RAIL | 803-1053-001 | 34 |
| 9 | PLUG, RAIL, 15.0 DIA | 408-8001-063 | 30 |
| 8 | SHCS, M 8 X 1.25 P X 35 LG | 101-5010-009 | 30 |
| 7 | BUSHING, 4.0 DIA TUBING x M8 | 506-3023-009 | 6 |
| 6 | SLEEVE, 4 DIA TUBING | 506-3023-010 | 11 |
| 5 | ADAPTOR, STR, M8 F x M6 M | 506-3025-014 | 4 |
| 4 | SPACER, GUIDE, LINEAR | 803-0100-001 | 4 |
| 3 | GUIDE, LINEAR | 211-1100-107 | 4 |
| 2 | RAIL, GUIDE , SADDLE | 211-1100-109 | 2 |
| 1 | SADDLE, MACHINING, VM1 | 803-0104-002 | 1 |

| REV | E.C.N. NO. | REVISION DESCRIPTION | REV BY | DATE | CHK BY | DATE | APPD BY | DATE |
|---|---|---|---|---|---|---|---|---|
| A | 15483 | REL | | | | | | |

SURFACE TREATMENT: NONE

HEAT TREATMENT: NONE

FIRST USED ON: VM1

EXCEPT AS NOTED: ALL CORNERS MUST BE AS FOLLOWS
INSIDE: 1.3 X 45° OR 1.3 R MAX
OUTSIDE: 0.8 X 45° OR 1.3 R

EXCEPT AS NOTED: ALL DIMENSIONS IN METRIC TOLERANCE
DECIMAL: .0 ±0.8, .00 ±0.4, .000 ±0.13, .0000 ±0.013, ANGULAR ±0°30'

EXCEPT AS NOTED: WELDING TOLERANCE MUST BE AS FOLLOWS
±3

HURCO COMPANIES, INC.
INDIANAPOLIS, IN U.S.A.

DESCRIPTION: ASS'Y, SADDLE

| DRAWN | DATE | CHECKED | DATE | APPROVED | DATE |
|---|---|---|---|---|---|
| KEN | 06-16-02 | MLE | 06-18-02 | JLW | 09-04-02 |

SCALE: 1:4
UNIT OF MEAS.: PC
SIZE: D
DRAWING: 003-0102-002
SHT.: 1 OF 2
REV.: A

| SIZE | DRAWING | SHT. | REV. |
|---|---|---|---|
| D | 003-0102-002 | 2 OF 2 | A |

PROPRIETARY INFORMATION

INFORMATION CONTAINED HEREIN IS THE PROPERTY OF HURCO COMPANIES, INC. NO REPRODUCTION OR DISCLOSURE OF THIS INFORMATION SHALL BE MADE BY THE RECIPIENT TO ANY OTHER PERSON OR ORGANIZATION WITHOUT THE PRIOR WRITTEN CONSENT OF HURCO COMPANIES, INC.

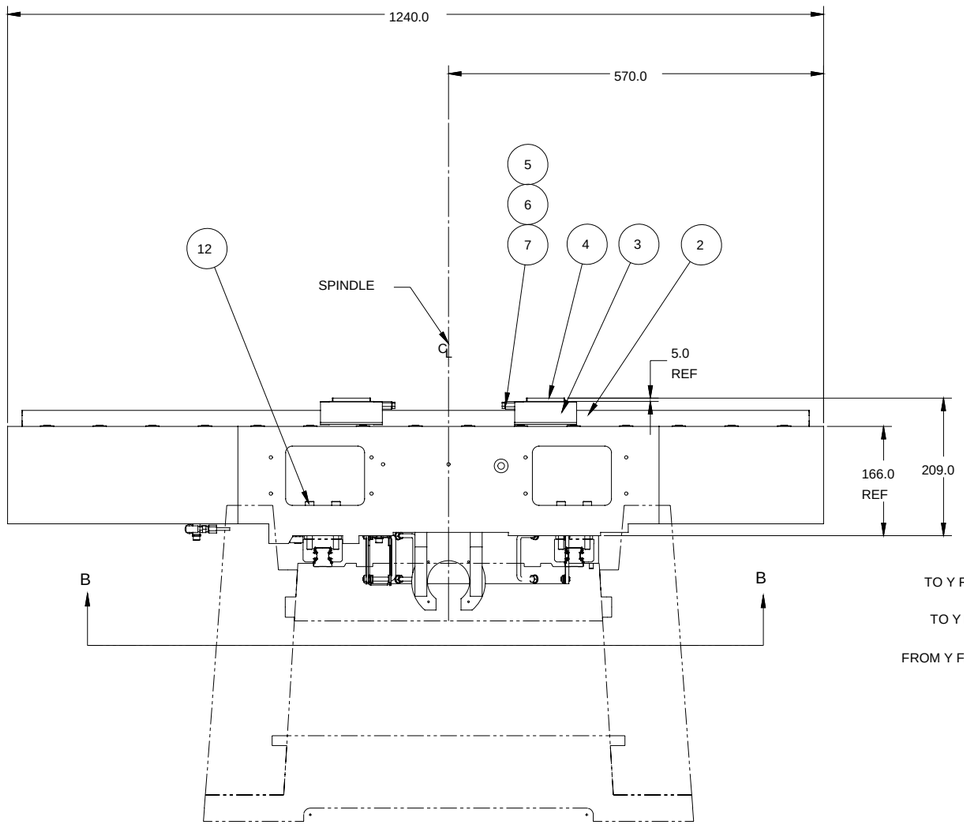


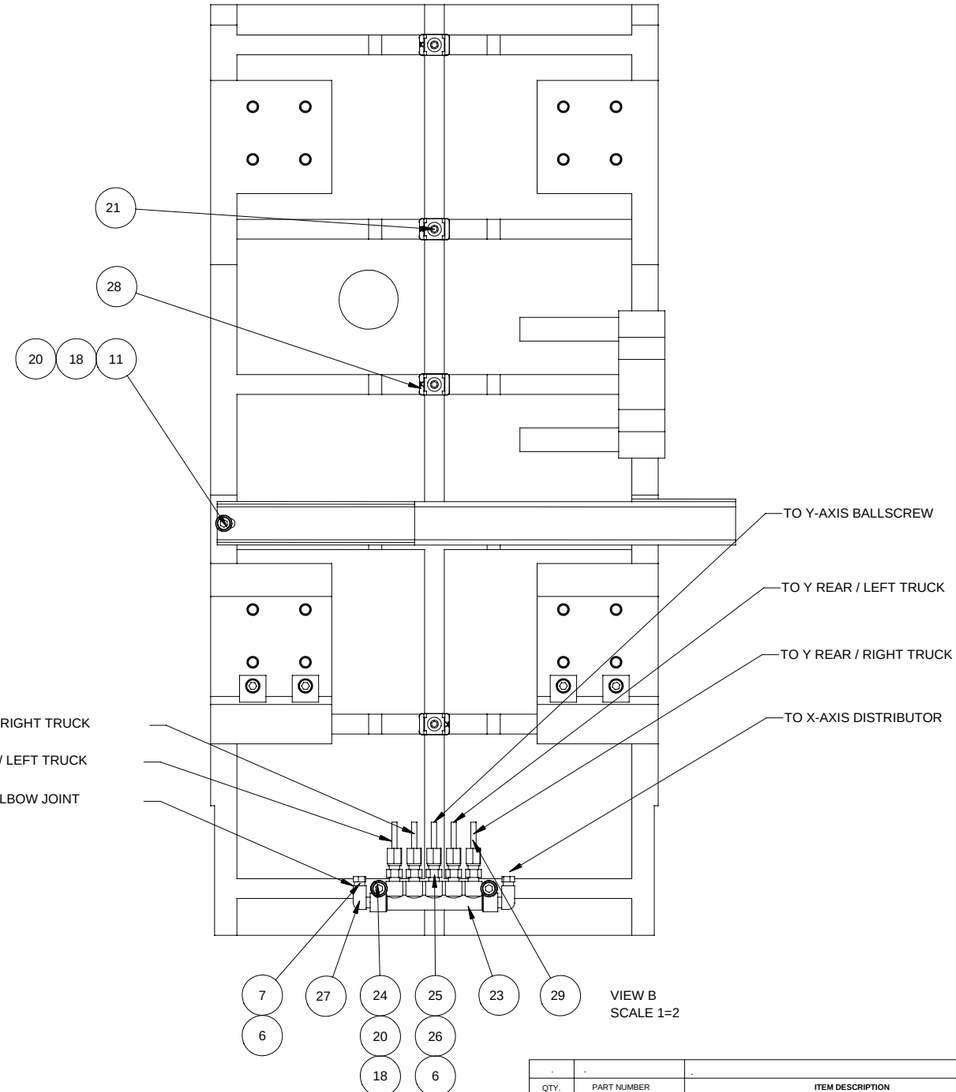


| QTY. | PART NUMBER | ITEM DESCRIPTION | ITEM |
|---|---|---|---|

PARTS LIST

| REV | E.C.N. NO. | REVISION DESCRIPTION | REV BY | DATE | CHK BY | DATE | APPD BY | DATE |
|---|---|---|---|---|---|---|---|---|
| A | 15483 | REL | | | | | | |

SURFACE TREATMENT: NONE

HEAT TREATMENT: NONE

FIRST USED ON: VM1

EXCEPT AS NOTED: ALL CORNERS MUST BE AS FOLLOWS
INSIDE: 1.3 X 45° OR 1.3 R MAX
OUTSIDE: 0.8 X 45° OR 1.3 R

EXCEPT AS NOTED: WELDING TOLERANCE MUST BE AS FOLLOWS ±3

EXCEPT AS NOTED: ALL DIMENSIONS IN METRIC TOLERANCE
DECIMAL
.0 ±0.8
.00 ±0.4
.000 ±0.13
.0000 ±0.013
ANGULAR ±0°30'

HURCO

HURCO COMPANIES, INC.
INDIANAPOLIS, IN U.S.A.

| DESCRIPTION | | | | | | | |
|---|---|---|---|---|---|---|---|
| ASS'Y, SADDLE | | | | | | | |
| DRAWN | DATE | CHECKED | DATE | APPROVED | DATE | | |
| KEN | 06-16-02 | MLE | 06-18-02 | JLW | 09-04-02 | | |
| SCALE | SIZE | DRAWING | | | SHT. | REV. | |
| 1:4 | D | 003-0102-002 | | | 2 OF 2 | A | |
| UNIT OF MEAS. | | | | | | | |
| PC | | | | | | | |

| SIZE | DRAWING | SHT. | REV. |
|---|---|---|---|
| D | 003-0102-003 | 1 OF 2 | B |

PROPRIETARY INFORMATION

INFORMATION CONTAINED HEREIN IS THE PROPERTY OF HURCO COMPANIES, INC. NO REPRODUCTION OR DISCLOSURE OF THIS INFORMATION SHALL BE MADE BY THE RECIPIENT TO ANY OTHER PERSON OR ORGANIZATION WITHOUT THE PRIOR WRITTEN CONSENT OF HURCO COMPANIES, INC.

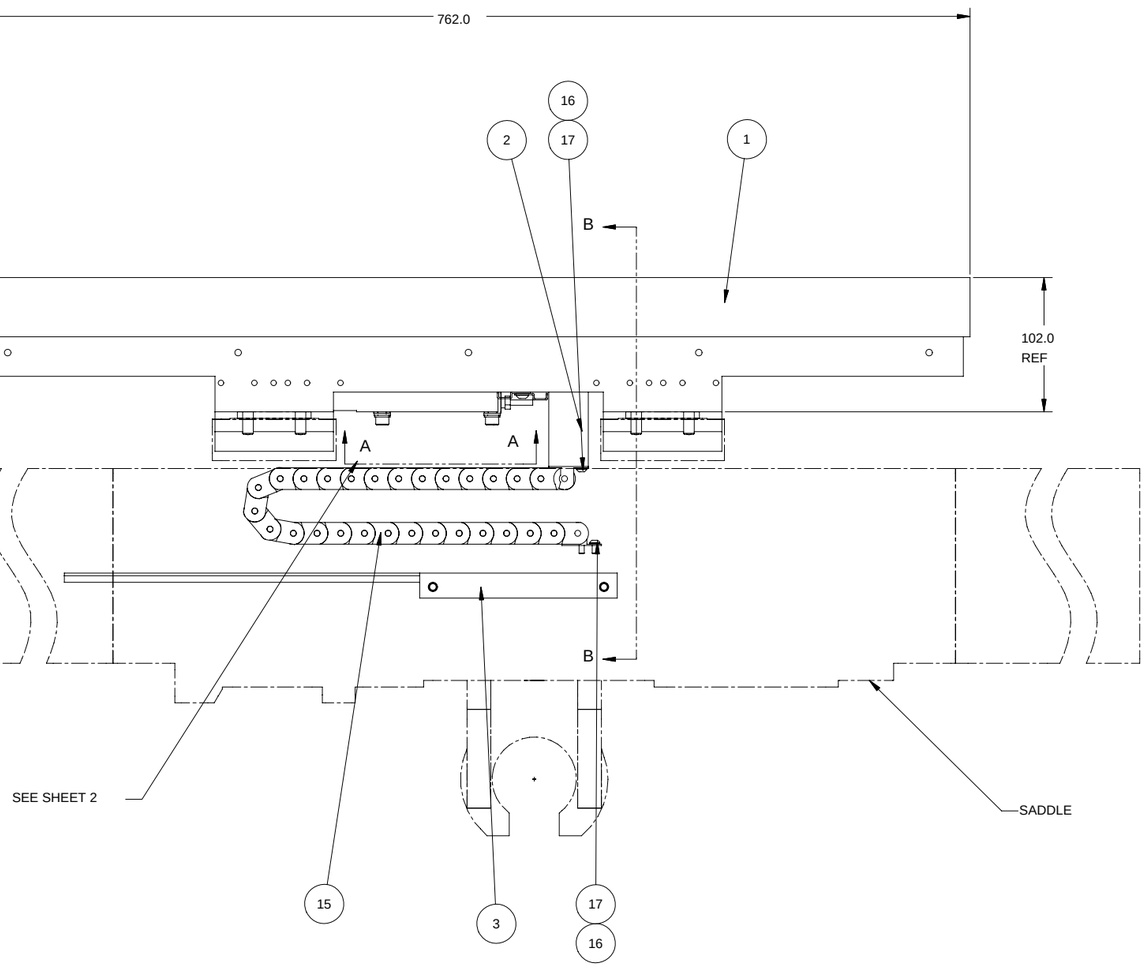


FRONT VIEW OF MACHINE

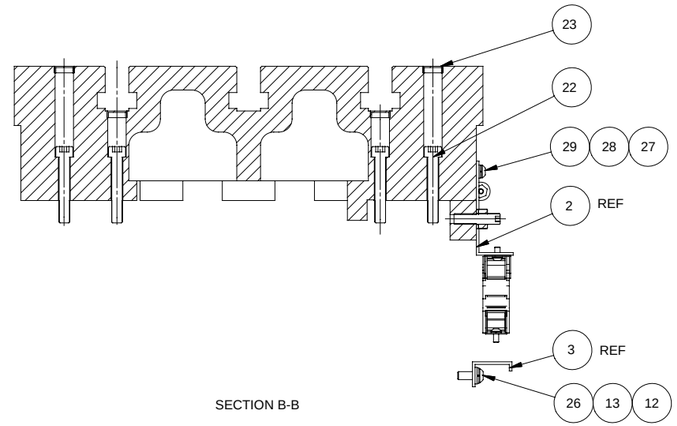


SECTION B-B

| QTY. | PART NO. | DESCRIPTION | ITEM |
|---|---|---|---|
| 2 | 108-5003-006 | BHSCS, M 5 X 0.8 P X 16 LG | 29 |
| 2 | 110-0046-006 | LOCKWASHER, M5, HELICAL SPRING | 28 |
| 2 | 110-5001-003 | WASHER, FLAT, M5 | 27 |
| 2 | 108-5004-004 | BHSCS, M 6 X 1.0 P 16 LG | 26 |
| 2 | 108-5003-004 | BHCS, M 5 X 0.8 P X 12 LG | 25 |
| 4 | 408-7501-057 | CLAMP, TUBE, 4MM DIA | 24 |
| 16 | 408-8001-063 | PLUG, RAIL, 15.0 DIA | 23 |
| 16 | 101-5010-012 | SHCS, M 8 X 1.25 P X 50 LG | 22 |
| 4 | 117-5015-001 | NUT, HEX M8 X 1.25 P | 21 |
| 4 | 110-0046-008 | LOCKWASHER, M8, HELICAL SPRING | 20 |
| 4 | 103-5165-067 | SSS, M8 x 1.25 P x 35 LG | 19 |
| 4 | 101-5010-009 | SHCS, M 8 X 1.25 P X 35 LG | 18 |
| 4 | 108-5002-001 | BHSCS, M 4 X 0.7 P X 8 LG | 17 |
| 4 | 110-0046-005 | LOCKWASHER, M4, HELICAL SPRING | 16 |
| 1 | 408-0130-048 | CHAIN, X-AXIS CABLE - 28 P | 15 |
| 2 | 101-5008-009 | SHCS, M 6 X 1.0 P X 30 LG | 14 |
| 4 | 110-0046-007 | LOCKWASHER, M6, HELICAL SPRING | 13 |
| 4 | 110-5001-004 | WASHER, FLAT, M6 | 12 |
| 1 | 506-3023-009 | BUSHING, 4.0 DIA TUBING x M8 | 11 |
| 1 | 506-5008-017 | PLUG, M8 | 10 |
| 12" ~~6~~ | 508-2001-009 | TUBING, NYLON, 4.0 MM DIA. | 9 |
| 6 | 506-3023-010 | SLEEVE, 4 DIA TUBING | 8 |
| 5 | 506-3018-002 | NUT, 4.0 DIA TUBING x M8 | 7 |
| 5 | 506-3024-023 | METERING UNIT, (#PV1) | 6 |
| 2 | 803-0100-005 | PLATE, LINEAR GUIDE LOCATING | 5 |
| 1 | 502-7001-027 | DISTRIBUTOR, 7 PORT, M8 | 4 |
| 1 | 803-0101-009 | BRKT, CARRIER, CABLE, LOWER | 3 |
| 1 | 803-0101-008 | BRKT, CARRIER, CABLE, UPPER | 2 |
| 1 | 803-0104-003 | TABLE, MACHINING, VM1 | 1 |

| REV | E.C.N. NO. | REVISION DESCRIPTION | REV BY | DATE | CHK BY | DATE | APPD BY | DATE |
|---|---|---|---|---|---|---|---|---|
| B | 15517 | (1) ITEM 15, WAS 408-0130-032 | Kevin | 09 27 01 | MLE | 09 27 01 | JLW | 10-03 2002 |
| A | 15483 | REL | | | | | | |

SURFACE TREATMENT: NONE

HEAT TREATMENT: NONE

FIRST USED ON: VM1

EXCEPT AS NOTED: ALL CORNERS MUST BE AS FOLLOWS
INSIDE: 1.3 X 45° OR 1.3 R MAX
OUTSIDE: 0.8 X 45° OR 1.3 R

EXCEPT AS NOTED: ALL DIMENSIONS IN METRIC TOLERANCE
DECIMAL .0 ±0.8, .00 ±0.4, .000 ±0.13, .0000 ±0.013
ANGULAR ±0°30'

EXCEPT AS NOTED: WELDING TOLERANCE MUST BE AS FOLLOWS
±3

HURCO COMPANIES, INC.
INDIANAPOLIS, IN U.S.A.

DESCRIPTION: ASS'Y, TABLE, VM1

| DRAWN | DATE | CHECKED | DATE | APPROVED | DATE |
|---|---|---|---|---|---|
| KEN | 06-22-02 | MLE | 06-26-02 | JLW | 09-05-02 |

SCALE: 1:2
UNIT OF MEAS.: PC
SIZE: D
DRAWING: 003-0102-003
SHT.: 1 OF 2
REV.: B

| SIZE | DRAWING | SHT. | REV. | PROPRIETARY INFORMATION |
|---|---|---|---|---|
| D | 003-0102-003 | 2 OF 2 | B | INFORMATION CONTAINED HEREIN IS THE PROPERTY OF HURCO COMPANIES, INC. NO REPRODUCTION OR DISCLOSURE OF THIS INFORMATION SHALL BE MADE BY THE RECIPIENT TO ANY OTHER PERSON OR ORGANIZATION WITHOUT THE PRIOR WRITTEN CONSENT OF HURCO COMPANIES, INC. |

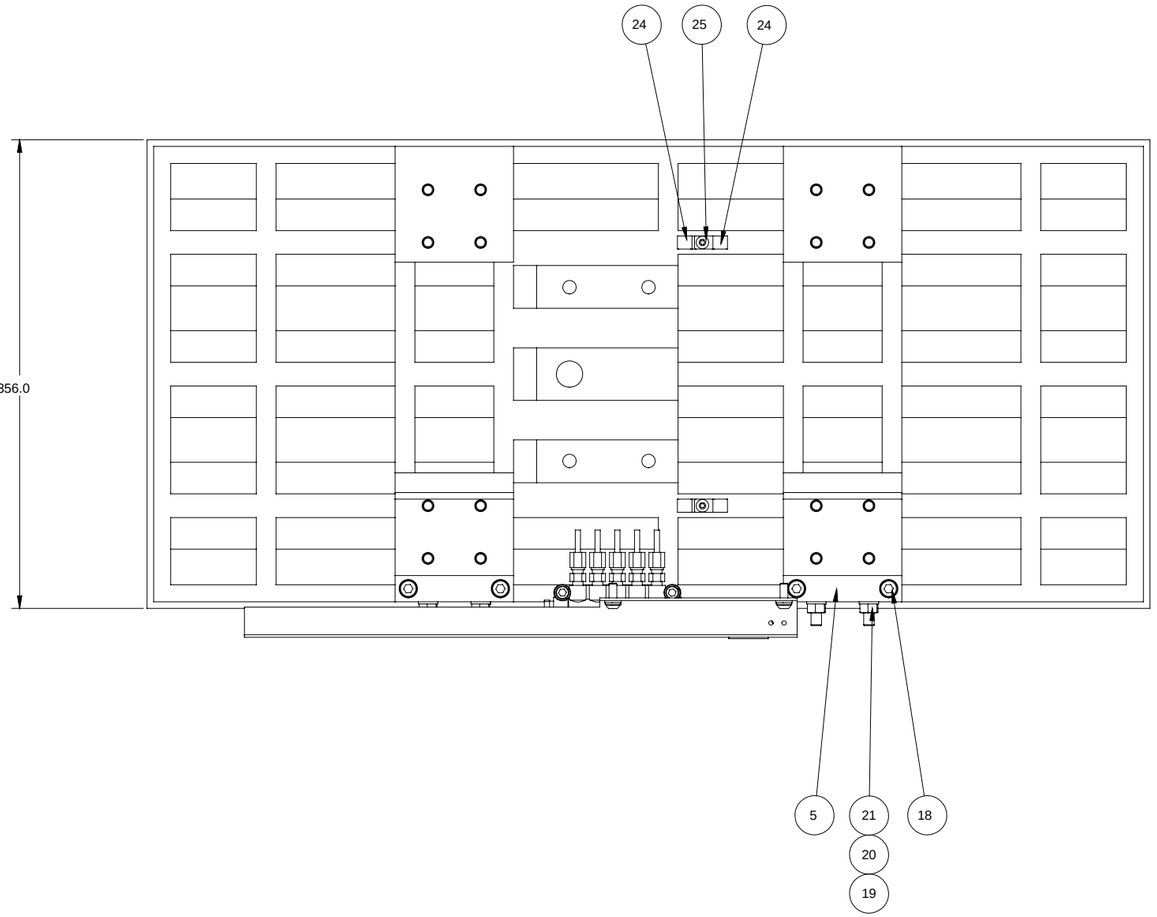


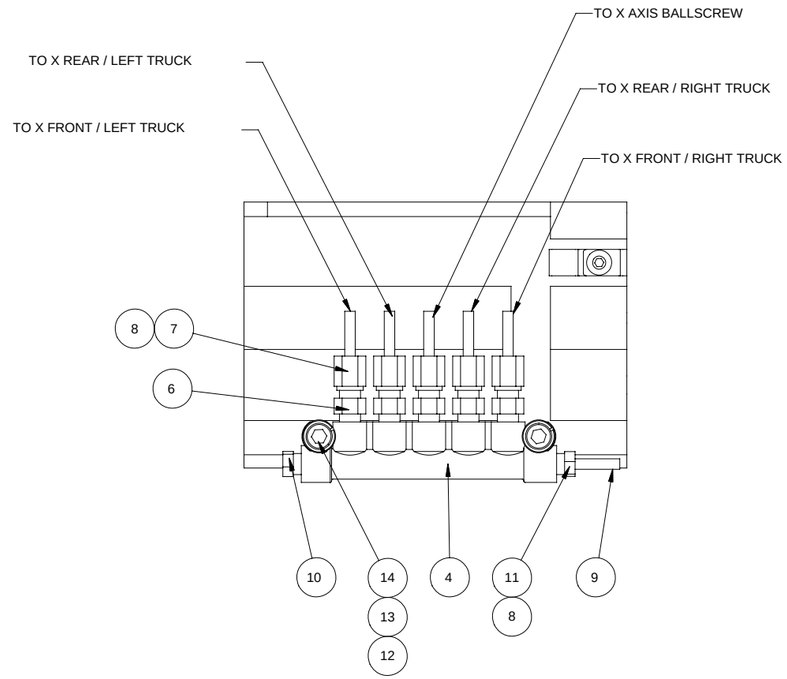


SECTION A-A
SCALE 1=1
FROM SHEET 1

| QTY. | PART NUMBER | ITEM DESCRIPTION | ITEM |
|---|---|---|---|

PARTS LIST

| REV | E.C.N. NO. | REVISION DESCRIPTION | REV BY | DATE | CHK BY | DATE | APPD BY | DATE |
|---|---|---|---|---|---|---|---|---|
| A | 15483 | REL | | | | | | |

SURFACE TREATMENT: NONE

HEAT TREATMENT: NONE

FIRST USED ON: VM1

EXCEPT AS NOTED: ALL CORNERS MUST BE AS FOLLOWS
INSIDE: 1.3 X 45° OR 1.3 R MAX
OUTSIDE: 0.8 X 45° OR 1.3 R

EXCEPT AS NOTED: ALL DIMENSIONS IN METRIC TOLERANCE
DECIMAL: .0 ±0.8; .00 ±0.4; .000 ±0.13; .0000 ±0.013; ANGULAR ±1°30'

EXCEPT AS NOTED: WELDING TOLERANCE MUST BE AS FOLLOWS
±3

HURCO COMPANIES, INC.
INDIANAPOLIS, IN U.S.A.

DESCRIPTION: ASS'Y, TABLE, VM1

| DRAWN | DATE | CHECKED | DATE | APPROVED | DATE |
|---|---|---|---|---|---|
| KEN | 06-22-02 | MLE | 06-26-02 | JLW | 09-05-02 |

SCALE 1:2 | UNIT OF MEAS. PC | SIZE D | DRAWING 003-0102-003 | SHT. 2 OF 2 | REV. B

| SIZE | DRAWING | SHT. | REV. | PROPRIETARY INFORMATION |
|---|---|---|---|---|
| D | 003-0102-007 | 1 OF 1 | A | INFORMATION CONTAINED HEREIN IS THE PROPERTY OF HURCO COMPANIES, INC. NO REPRODUCTION OR DISCLOSURE OF THIS INFORMATION SHALL BE MADE BY THE RECIPIENT TO ANY OTHER PERSON OR ORGANIZATION WITHOUT THE PRIOR WRITTEN CONSENT OF HURCO COMPANIES, INC. |

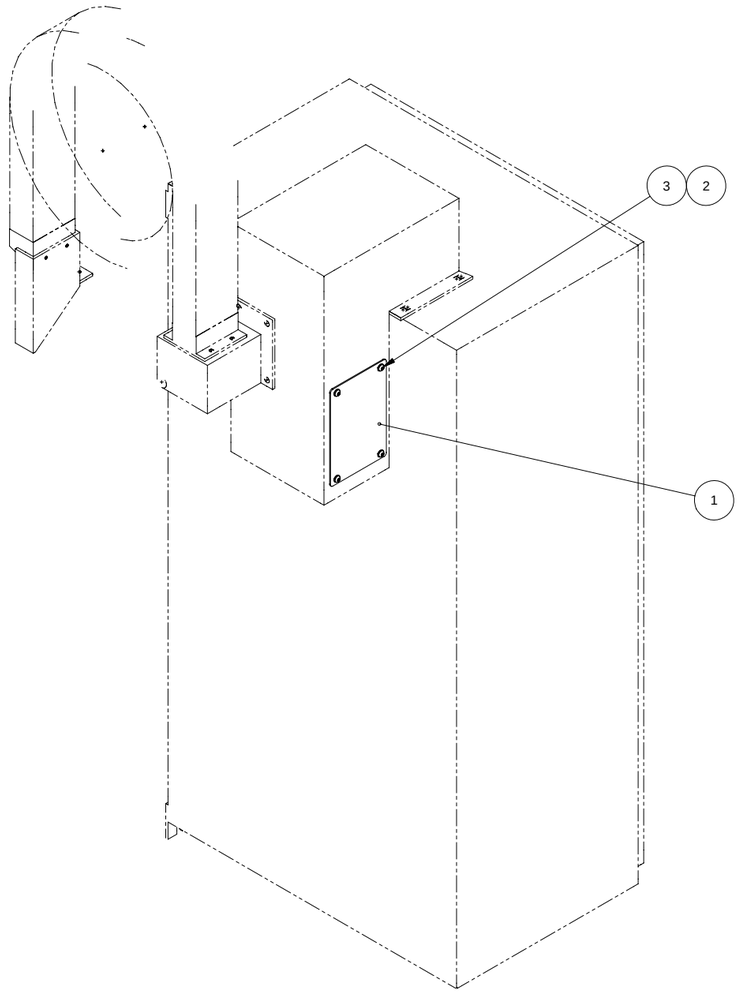


| QTY. | PART NO. | DESCRIPTION | ITEM |
|---|---|---|---|
| 4 | 108-5004-001 | BHSCS, M 6 X 1.0 P X 10 LG | 3 |
| 4 | 110-0046-007 | LOCKWASHER, M6, HELICAL SPRING | 2 |
| 1 | 803-0102-020 | COVER, CABLE BRACKET, 4th AXIS HOLE | 1 |

| REV | E.C.N. NO. | REVISION DESCRIPTION | REV BY | DATE | CHK BY | DATE | APPD BY | DATE |
|---|---|---|---|---|---|---|---|---|
| A | 15582 | ORIGINAL RELEASE | | | | | | |

SURFACE TREATMENT: NONE

HEAT TREATMENT: NONE

FIRST USED ON: VM1

EXCEPT AS NOTED: ALL CORNERS MUST BE AS FOLLOWS — INSIDE: 1.3 X 45° OR 1.3 R MAX; OUTSIDE: 0.8 X 45° OR 1.3 R

EXCEPT AS NOTED: ALL DIMENSIONS IN METRIC TOLERANCE — DECIMAL: .0 ±0.8, .00 ±0.4, .000 ±0.13, .0000 ±0.013, ANGULAR ±1°30'

EXCEPT AS NOTED: WELDING TOLERANCE MUST BE AS FOLLOWS ±3

HURCO COMPANIES, INC.
INDIANAPOLIS, IN U.S.A.

DESCRIPTION: ASS'Y, 4th INTERFACE, (USA)

| DRAWN | DATE | CHECKED | DATE | APPROVED | DATE |
|---|---|---|---|---|---|
| GLH | 3-24-03 | PFB | 3-24-03 | | |

SCALE: 1:1 — UNIT OF MEAS.: PC — SIZE: D — DRAWING: 003-0102-007 — SHT. 1 OF 1 — REV. A

# Ass'y., Head & Column, VM1, 003-0102-008—Rev. A

| SIZE | DRAWING | SHT. | REV. |
|---|---|---|---|
| D | 003-0102-008 | 1 OF 2 | A |

PROPRIETARY INFORMATION

INFORMATION CONTAINED HEREIN IS THE PROPERTY OF HURCO COMPANIES, INC. NO REPRODUCTION OR DISCLOSURE OF THIS INFORMATION SHALL BE MADE BY THE RECIPIENT TO ANY OTHER PERSON OR ORGANIZATION WITHOUT THE PRIOR WRITTEN CONSENT OF HURCO COMPANIES, INC.

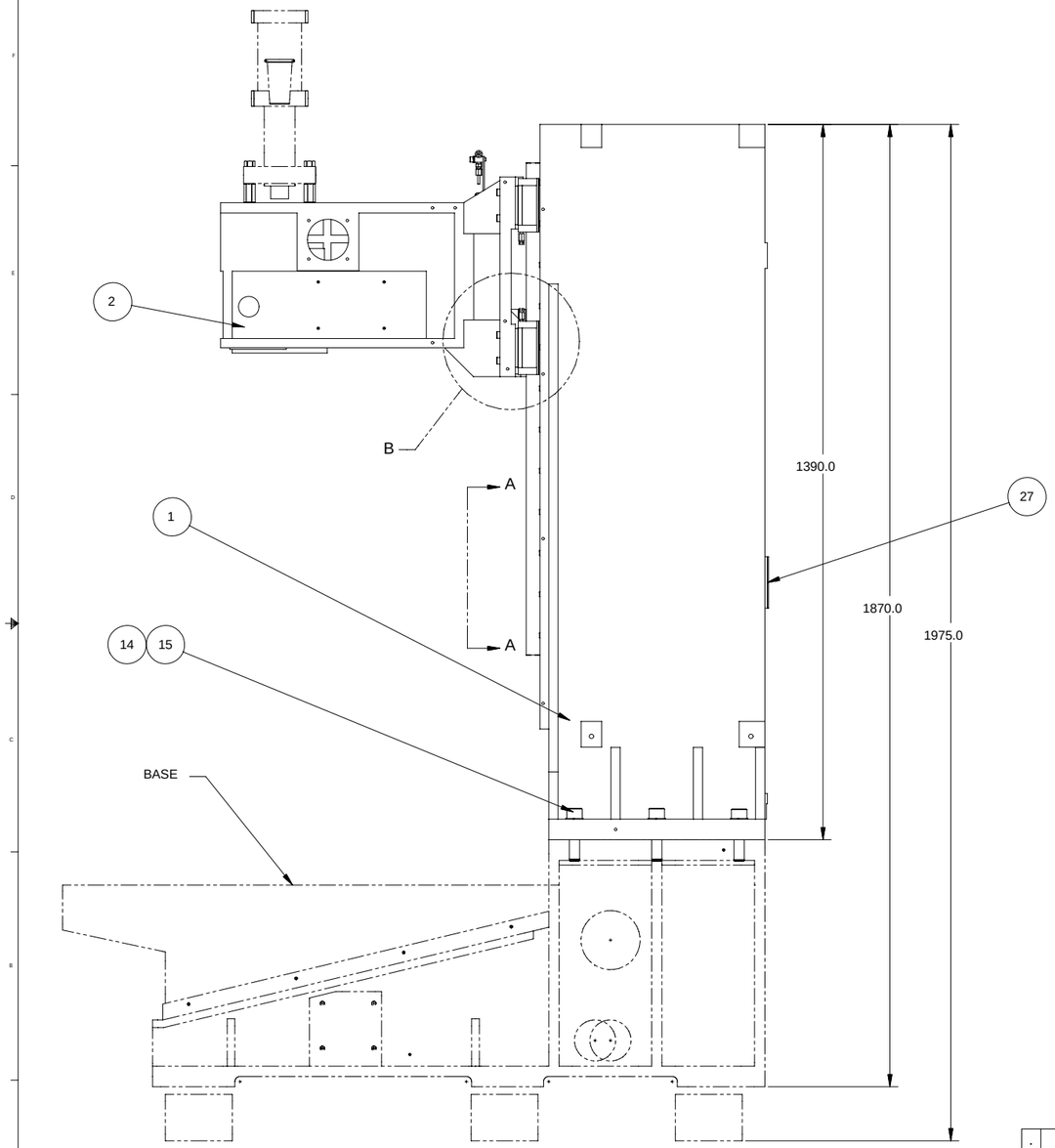


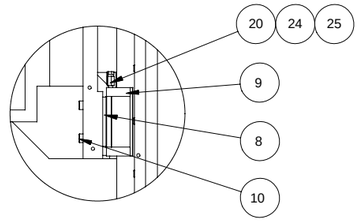


DETAIL B
SCALE 1=4

4.0 M =====

| QTY. | PART NO. | DESCRIPTION | ITEM |
|---|---|---|---|
| 2 | 101-5008-008 | SHCS, M 6 X 1.0 P X 25 LG | 28 |
| 1 | 803-0102-032 | COVER, COLUMN | 27 |
| 4 | 712-0003-003 | SADDLE, TIE MOUNT | 26 |
| 5 | 506-3023-009 | BUSHING, 4.0 DIA TUBING x M8 | 25 |
| 4 | 506-3025-014 | ADAPTOR, STR, M8 F x M6 M | 24 |
| 1 | 506-5008-017 | PLUG, M8 | 23 |
| 6 | 508-2001-009 | TUBING, NYLON, 4.0 MM DIA. | 22 |
| 5 | 506-3018-002 | NUT, 4.0 DIA TUBING x M8 | 21 |
| 10 | 506-3023-010 | SLEEVE, 4 DIA TUBING | 20 |
| 5 | 506-3024-022 | METERING UNIT, M8 M X M8 M, #2 | 19 |
| 6 | 108-5004-001 | BHSCS, M 6 X 1.0 P X 10 LG | 18 |
| 4 | 110-0046-007 | LOCKWASHER, M6, HELICAL SPRING | 17 |
| 4 | 110-5001-004 | WASHER, FLAT, M6 | 16 |
| 6 | 101-5016-004 | SHCS, M20 X 2.5 P X 80 LG | 15 |
| 6 | 110-0046-013 | LOCKWASHER, M20, HELICAL SPRING | 14 |
| 1 | 803-1002-006 | BRKT, MANIFOLD, Z LUBE | 13 |
| 1 | 502-7001-027 | DISTRIBUTOR, 7 PORT, M8 | 12 |
| 2 | 803-0100-007 | PLATE, LINEAR GUIDE LOCATING, Z AXIS | 11 |
| 16 | 101-5010-012 | SHCS, M 8 X 1.25 P X 50 LG | 10 |
| 4 | 211-1100-111 | GUIDE, LINEAR | 9 |
| 4 | 803-1042-046 | SPACER, LINEAR GUIDE | 8 |
| 28 | 101-5008-004 | SHCS, M 6 X 1.0 P X 16 LG | 7 |
| 24 | 803-1053-001 | GIB, RAIL | 6 |
| 24 | 408-8001-063 | PLUG, RAIL, 15.0 DIA | 5 |
| 24 | 101-5010-010 | SHCS, M 8 X 1.25P X 40 LG | 4 |
| 2 | 211-1100-110 | RAIL, GUIDE, COLUMN | 3 |
| 1 | 803-0104-005 | HEAD, MACHINING, VM1 | 2 |
| 1 | 803-0104-011 | COLUMN, MACHINING, VM1 | 1 |

| REV | E.C.N. NO. | REVISION DESCRIPTION | REV BY | DATE | CHK BY | DATE | APPD BY | DATE |
|---|---|---|---|---|---|---|---|---|
| A | 15606 | REL | | | | | | |

SURFACE TREATMENT: NONE

HEAT TREATMENT: NONE

FIRST USED ON: VM1

EXCEPT AS NOTED: ALL CORNERS MUST BE AS FOLLOWS
INSIDE: 1.3 X 45° OR 1.3 R MAX
OUTSIDE: 0.8 X 45° OR 1.3 R

EXCEPT AS NOTED: WELDING TOLERANCE MUST BE AS FOLLOWS ±3

EXCEPT AS NOTED: ALL DIMENSIONS IN METRIC TOLERANCE
DECIMAL .0 ±0.8, .00 ±0.4, .000 ±0.13, .0000 ±0.013
ANGULAR ±0°30'

HURCO COMPANIES, INC.
INDIANAPOLIS, IN U.S.A.

DESCRIPTION: ASS'Y, HEAD & COLUMN

| DRAWN | DATE | CHECKED | DATE | APPROVED | DATE |
|---|---|---|---|---|---|
| Kevin | 01-23-03 | MLE | 01-23-03 | JLW | 5-23-03 |

SCALE: 1:5
UNIT OF MEAS.: PC
SIZE: D
DRAWING: 003-0102-008
SHT. 1 OF 2
REV. A

| SIZE | DRAWING | SHT. | REV. |
|---|---|---|---|
| D | 003-0102-008 | 2 OF 2 | A |

PROPRIETARY INFORMATION

INFORMATION CONTAINED HEREIN IS THE PROPERTY OF HURCO COMPANIES, INC. NO REPRODUCTION OR DISCLOSURE OF THIS INFORMATION SHALL BE MADE BY THE RECIPIENT TO ANY OTHER PERSON OR ORGANIZATION WITHOUT THE PRIOR WRITTEN CONSENT OF HURCO COMPANIES, INC.

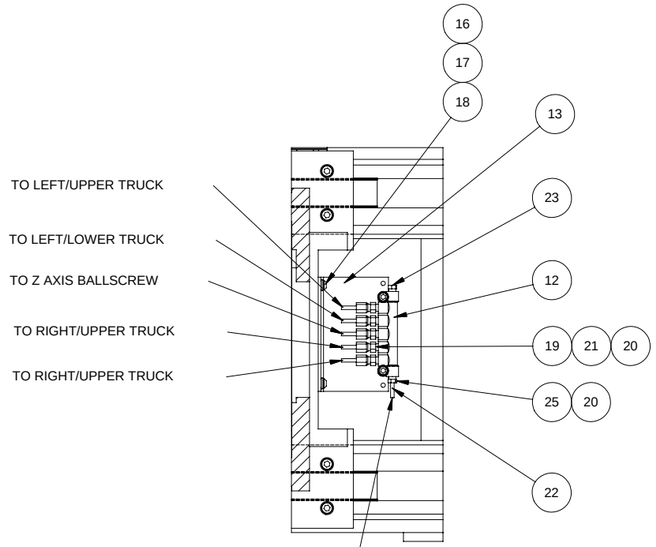


SECTION C-C
SCALE 1 : 3

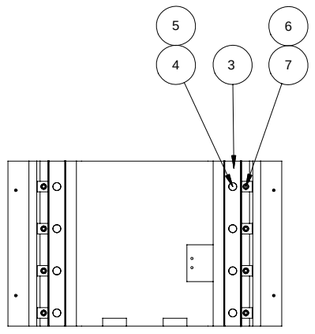


SECTION A-A
SCALE 1=1
FROM SHEET 1

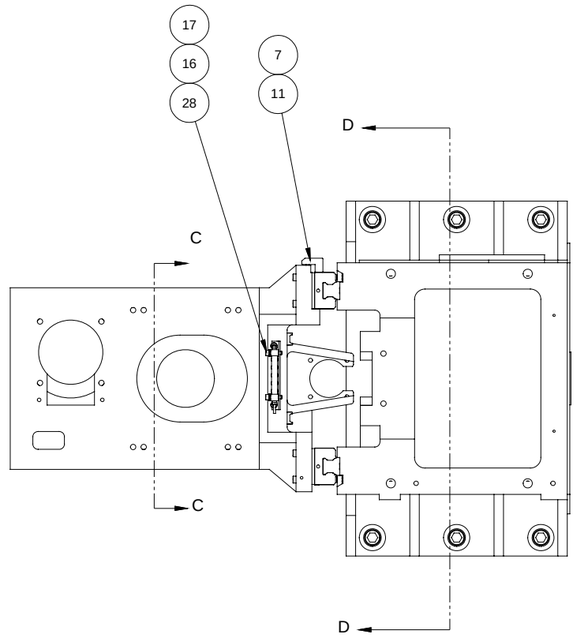


TOP VIEW

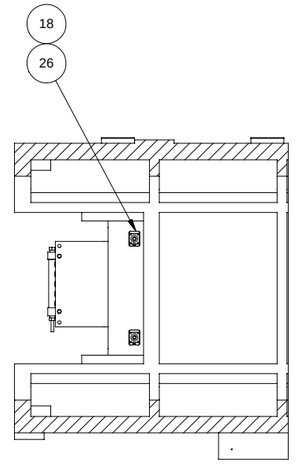


SECTION D-D
SCALE 1=4

| QTY. | PART NUMBER | ITEM DESCRIPTION | ITEM |
|---|---|---|---|

PARTS LIST

| REV | E.C.N. NO. | REVISION DESCRIPTION | REV BY | DATE | CHK BY | DATE | APPD BY | DATE |
|---|---|---|---|---|---|---|---|---|
| A | 15606 | REL | | | | | | |

SURFACE TREATMENT: NONE

HEAT TREATMENT: NONE

FIRST USED ON: VM1

EXCEPT AS NOTED: ALL CORNERS MUST BE AS FOLLOWS
INSIDE: 1.3 X 45° OR 1.3 R MAX
OUTSIDE: 0.8 X 45° OR 1.3 R

EXCEPT AS NOTED: WELDING TOLERANCE MUST BE AS FOLLOWS ±1°

EXCEPT AS NOTED: ALL DIMENSIONS IN METRIC TOLERANCE
DECIMAL: .0 ±0.8; .00 ±0.4; .000 ±0.13; .0000 ±0.013; ANGULAR ±1°30'

HURCO COMPANIES, INC.
INDIANAPOLIS, IN U.S.A.

DESCRIPTION: ASS'Y, HEAD & COLUMN

| DRAWN | DATE | CHECKED | DATE | APPROVED | DATE |
|---|---|---|---|---|---|
| Kevin | 01-23-03 | MLE | 01-23-03 | JLW | 5-23-03 |

| SCALE | SIZE | DRAWING | SHT. | REV. |
|---|---|---|---|---|
| 1:5 | D | 003-0102-008 | 2 OF 2 | A |

UNIT OF MEAS.: PC

| SIZE | DRAWING | SHT. | REV. | PROPRIETARY INFORMATION |
|---|---|---|---|---|
| D | 003-0103-001 | 1 OF 1 | C | INFORMATION CONTAINED HEREIN IS THE PROPERTY OF HURCO COMPANIES, INC. NO REPRODUCTION OR DISCLOSURE OF THIS INFORMATION SHALL BE MADE BY THE RECIPIENT TO ANY OTHER PERSON OR ORGANIZATION WITHOUT THE PRIOR WRITTEN CONSENT OF HURCO COMPANIES, INC. |

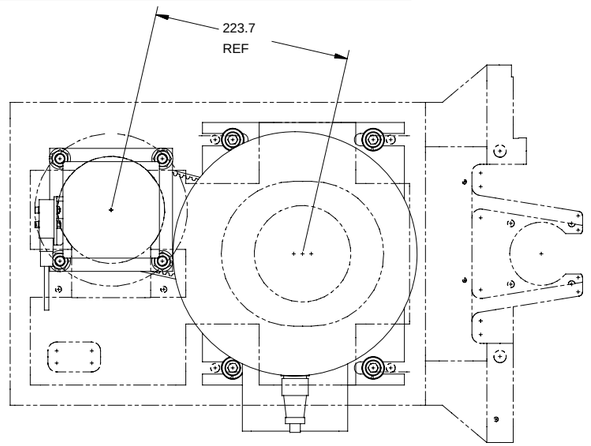


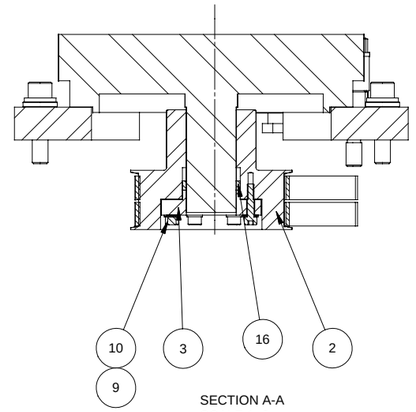


SECTION A-A
SCALE 1=2

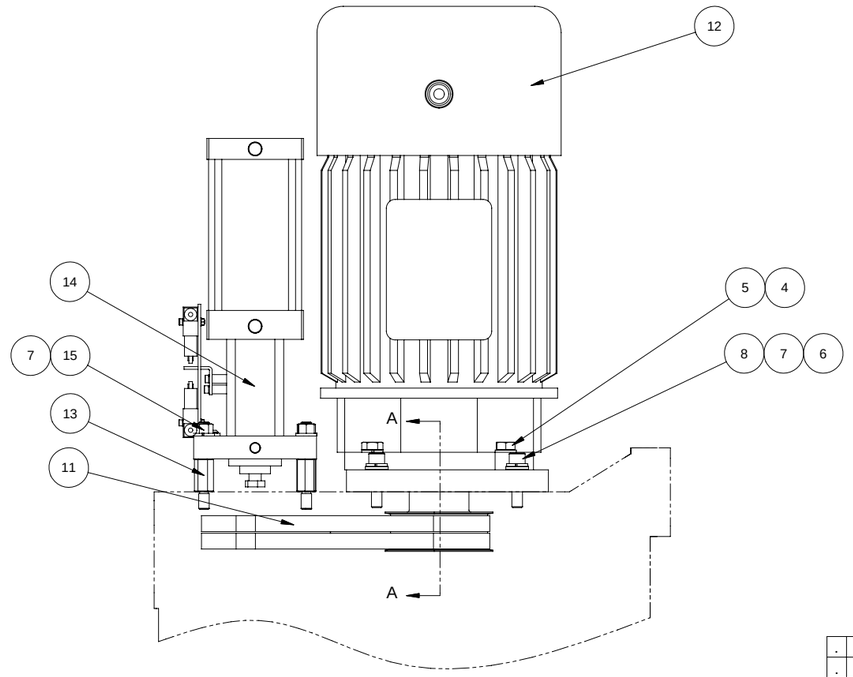


| ITEM | QTY. | PART NO. | DESCRIPTION |
|---|---|---|---|
| 16 | 1 | 219-0001-055 | LOCKING ELEMENT |
| 15 | 4 | 117-5017-001 | NUT, HEX M12 X 1.75 P |
| 14 | 1 | 003-1003-001 | ASS'Y, CYLINDER, UNCLAMP |
| 13 | 4 | 803-0106-001 | STANDOFF, CYLINDER |
| 12 | 1 | 402-6009-268 | SPINDLE MOTOR 10 kw |
| 11 | 1 | 803-0123-001 | BELT, SPLIT, GATES POLY CHAIN 'GT ' 8M-800-36 |
| 10 | 6 | 101-5008-008 | SHCS, M 6 X 1.0 P X 25 LG |
| 9 | 6 | 110-0046-007 | LOCKWASHER, M6, HELICAL SPRING |
| 8 | 4 | 101-5012-007 | SHCS, M12 X 1.75 P X 50 LG |
| 7 | 8 | 110-0046-010 | LOCKWASHER, M12, HELICAL SPRING |
| 6 | 4 | 803-1013-007 | WASHER, FLAT, M12 |
| 5 | 4 | 105-5051-005 | HHCS, M14 X 2.0 P X 45 LG |
| 4 | 4 | 110-0046-011 | LOCKWASHER, M14, HELICAL SPRING |
| 3 | 1 | 803-0110-003 | RETAINER, SPINDLE MOTOR PULLEY |
| 2 | 1 | 803-0107-002 | PULLEY, SPINDLE MOTOR |
| 1 | 2 | 803-0100-006 | PLATE, SPINDLE MOTOR |

| REV | E.C.N. NO. | REVISION DESCRIPTION | REV BY | DATE | CHK BY | DATE | APPD BY | DATE |
|---|---|---|---|---|---|---|---|---|
| C | 15639 | ITEM #11 WAS 204-0007-014 | ML | 7-21-03 | PFB | 7-21-03 | | |
| B | 15517 | (1) WAS 110-0046-007, QTY 3 (2) WAS 101-5008-006, QTY 3; (3) ADD ITEM 16 | KEN | 09-19-02 | MLE | 09-20-02 | JLW | 10-08-2002 |
| A | 15483 | | | | | | | |

SURFACE TREATMENT: NONE

HEAT TREATMENT: NONE

FIRST USED ON: VM1

EXCEPT AS NOTED: ALL CORNERS MUST BE AS FOLLOWS
INSIDE: 1.3 X 45° OR 1.3 R MAX
OUTSIDE: 0.8 X 45° OR 1.3 R

EXCEPT AS NOTED: ALL DIMENSIONS IN METRIC TOLERANCE
DECIMAL
.0 ±0.8
.00 ±0.4
.000 ±0.13
.0000 ±0.013
ANGULAR ±2°30'

EXCEPT AS NOTED: WELDING TOLERANCE MUST BE AS FOLLOWS
±3

HURCO COMPANIES, INC.
INDIANAPOLIS, IN U.S.A.

DESCRIPTION: ASS'Y, SPINDLE TRANSMISSION, 8K

| DRAWN | DATE | CHECKED | DATE | APPROVED | DATE |
|---|---|---|---|---|---|
| KEN | 06-26-02 | MLE | 06-29-02 | JLW | 09-09-02 |

| SCALE | SIZE | DRAWING | SHT. | REV. |
|---|---|---|---|---|
| 1:3 | D | 003-0103-001 | 1 OF 1 | C |

UNIT OF MEAS. PC

| SIZE | DRAWING | SHT. | REV. |
|---|---|---|---|
| D | 003-0103-002 | 1 OF 2 | D |

**PROPRIETARY INFORMATION**

INFORMATION CONTAINED HEREIN IS THE PROPERTY OF HURCO COMPANIES, INC. NO REPRODUCTION OR DISCLOSURE OF THIS INFORMATION SHALL BE MADE BY THE RECIPIENT TO ANY OTHER PERSON OR ORGANIZATION WITHOUT THE PRIOR WRITTEN CONSENT OF HURCO COMPANIES, INC.

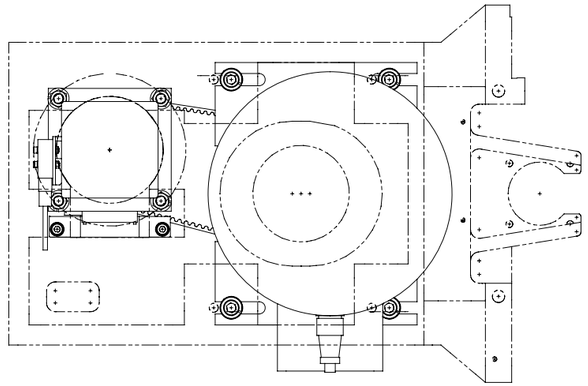

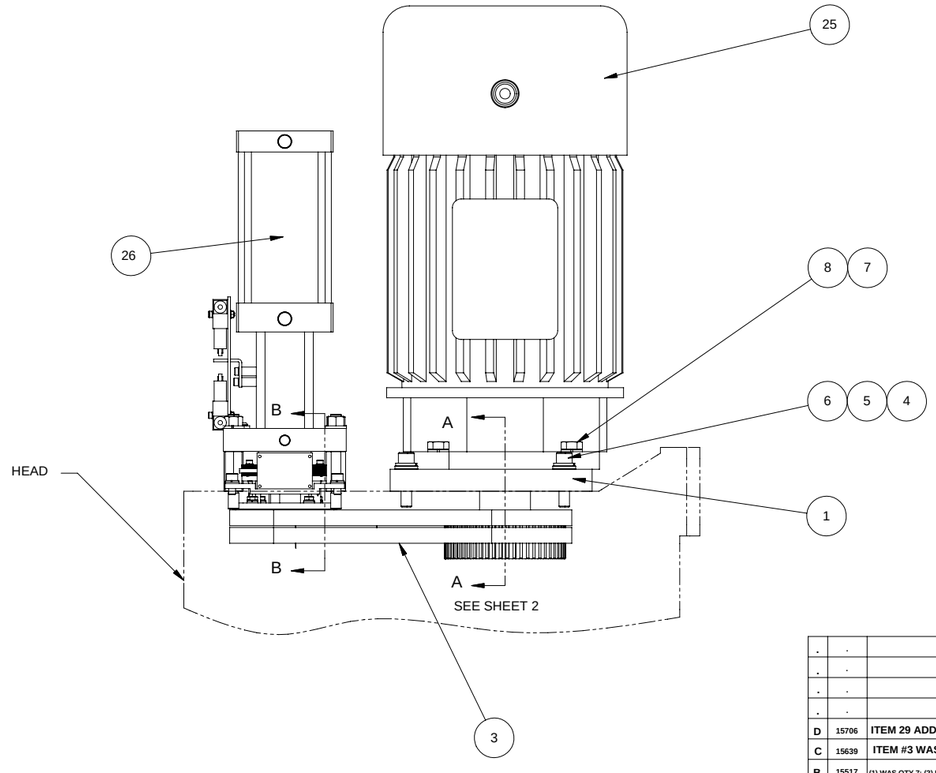


| | QTY. | PART NO. | DESCRIPTION | ITEM |
|---|---|---|---|---|
| NOT SHOWN (D) | 1 | 407-0001-111 | MC5 INVERTER FILTER | 29 |
| (B3) | 3 | 219-0001-055 | LOCKING ELEMENT | 28 |
| | 4 | 117-5017-001 | NUT, HEX M12 X 1.75 P | 27 |
| | 1 | 003-1003-001 | ASS'Y, CYLINDER, UNCLAMP | 26 |
| | 1 | 402-6009-268 | SPINDLE MOTOR 10 kw | 25 |
| (B2) | 6 | 101-5008-008 | SHCS, M 6 X 1.0 P X 25 LG | 24 |
| | 1 | 803-0107-003 | PULLEY, SPINDLE MOTOR, 55T | 23 |
| | 1 | 416-0248-069 | ENCODER, MAGNETIC | 22 |
| | 4 | 803-0106-014 | STANDOFF, CYLINDER | 21 |
| | 2 | 108-5002-005 | BHSCS, M 4 X 0.7 P X 16 LG | 20 |
| | 2 | 101-5010-003 | SHCS, M 8 X 1.25 P X 16 LG | 19 |
| | 2 | 110-0046-008 | LOCKWASHER, M8, HELICAL SPRING | 18 |
| | 2 | 110-5001-005 | WASHER, FLAT, M8 | 17 |
| | 4 | 101-5021-008 | SHCS, M 4 X 0.7 P X 20 LG | 16 |
| | 6 | 110-0046-005 | LOCKWASHER, M4, HELICAL SPRING | 15 |
| | 4 | 110-5001-002 | WASHER, FLAT, M4 | 14 |
| | 4 | 105-5046-007 | HHCS, M 6 X 1.0 P X 20 LG | 13 |
| (B1) | 10 | 110-0046-007 | LOCKWASHER, M6, HELICAL SPRING | 12 |
| | 4 | 110-5001-004 | WASHER, FLAT, M6 | 11 |
| | 1 | 803-0101-022 | BRACKET, ENCODER SENSOR | 10 |
| | 1 | 803-0110-005 | BRACKET, ENCODER GEAR | 9 |
| | 4 | 105-5051-005 | HHCS, M14 X 2.0 P X 45 LG | 8 |
| | 4 | 110-0046-011 | LOCKWASHER, M14, HELICAL SPRING | 7 |
| | 4 | 101-5012-007 | SHCS, M12 X 1.75 P X 50 LG | 6 |
| | 8 | 110-0046-010 | LOCKWASHER, M12, HELICAL SPRING | 5 |
| | 4 | 803-1013-007 | WASHER, FLAT, M12 | 4 |
| (C) | 1 | 803-1075-001 | BELT, SPLIT, POLYCHAIN, GT | 3 |
| | 1 | 803-0110-003 | RETAINER, SPINDLE MOTOR PULLEY | 2 |
| | 2 | 803-0100-006 | PLATE, SPINDLE MOTOR | 1 |

| REV | E.C.N. NO. | REVISION DESCRIPTION | REV BY | DATE | CHK BY | DATE | APPD BY | DATE |
|---|---|---|---|---|---|---|---|---|
| D | 15706 | ITEM 29 ADDED | JLW | 2-10 2004 | PFB | 2-10 2004 | PFB | 2-10 2004 |
| C | 15639 | ITEM #3 WAS 204-0007-012 | ML | 7-21 03 | PFB | 7-21 03 | | |
| B | 15517 | (1) WAS QTY 7; (2) ITEM 24 WAS 101-5008-006, QTY 3; (3) ITEM 28 ADDED | KEN | 08-19 2002 | MLE | 08-20 2002 | JLW | 10-09 2002 |
| A | 15483 | REL | | | | | | |

SURFACE TREATMENT: NONE

HEAT TREATMENT: NONE

FIRST USED ON: VM1

EXCEPT AS NOTED: ALL CORNERS MUST BE AS FOLLOWS
INSIDE: 1.3 X 45° OR 1.3 R MAX
OUTSIDE: 0.8 X 45° OR 1.3 R

EXCEPT AS NOTED: ALL DIMENSIONS IN METRIC TOLERANCE
DECIMAL .0 ±0.8, .00 ±0.4, .000 ±0.13, .0000 ±0.013
ANGULAR ±0°30'

EXCEPT AS NOTED: WELDING TOLERANCE MUST BE AS FOLLOWS
±3

HURCO COMPANIES, INC.
INDIANAPOLIS, IN U.S.A.

DESCRIPTION: ASS'Y SPINDLE TRANSMISSION, 10K

| DRAWN | DATE | CHECKED | DATE | APPROVED | DATE |
|---|---|---|---|---|---|
| KEN | 06-26-02 | MLE | 06-30-02 | JLW | 09-09-02 |

SCALE: 1:3
UNIT OF MEAS.: PC
SIZE: D
DRAWING: 003-0103-002
SHT. 1 OF 2
REV. D

| SIZE | DRAWING | SHT. | REV. |
|---|---|---|---|
| D | 003-0103-002 | 2 OF 2 | D |

PROPRIETARY INFORMATION

INFORMATION CONTAINED HEREIN IS THE PROPERTY OF HURCO COMPANIES, INC. NO REPRODUCTION OR DISCLOSURE OF THIS INFORMATION SHALL BE MADE BY THE RECIPIENT TO ANY OTHER PERSON OR ORGANIZATION WITHOUT THE PRIOR WRITTEN CONSENT OF HURCO COMPANIES, INC.

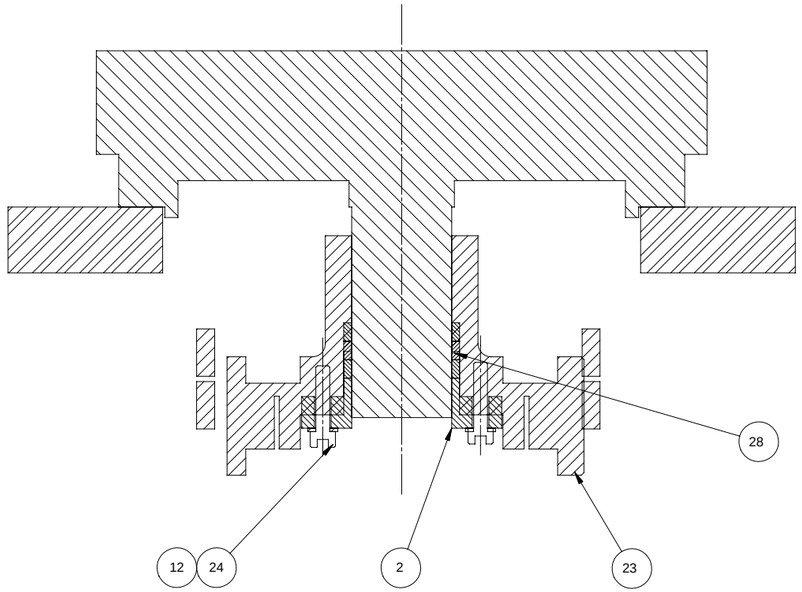


SECTION A-A
SCALE 1 : 1
FROM SHEET 1

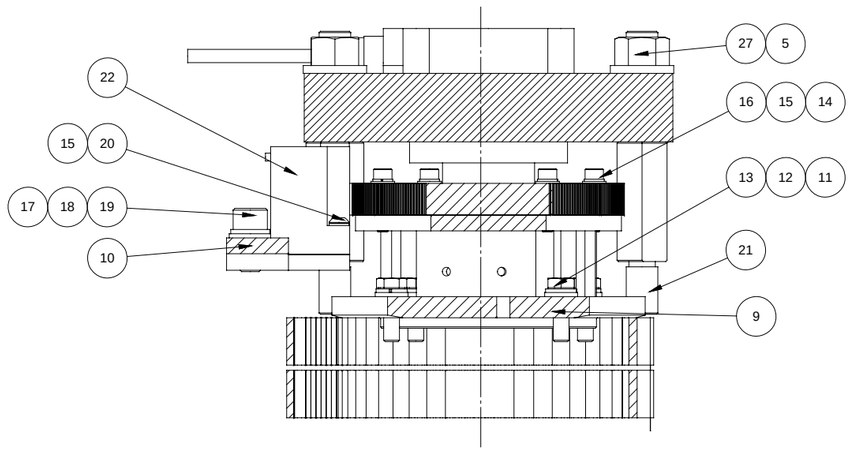


SECTION B-B
SCALE 1=1
FROM SHEET1

| REV | E.C.N. NO. | REVISION DESCRIPTION | REV BY | DATE | CHK BY | DATE | APPD BY | DATE |
|---|---|---|---|---|---|---|---|---|
| A | 15483 | REL | | | | | | |

SURFACE TREATMENT: NONE

HEAT TREATMENT: NONE

FIRST USED ON: VM1

EXCEPT AS NOTED: ALL CORNERS MUST BE AS FOLLOWS
INSIDE: 1.3 X 45° OR 1.9 R MAX
OUTSIDE: 0.8 X 45° OR 1.3 R

EXCEPT AS NOTED: WELDING TOLERANCE MUST BE AS FOLLOWS
±3

EXCEPT AS NOTED: ALL DIMENSIONS IN METRIC TOLERANCE
DECIMAL
.0 ±0.8
.00 ±0.4
.000 ±0.13
.0000 ±0.013
ANGULAR ±0°30'

HURCO
HURCO COMPANIES, INC.
INDIANAPOLIS, IN U.S.A.

DESCRIPTION: ASS'Y SPINDLE TRANSMISSION, 10K

| DRAWN | DATE | CHECKED | DATE | APPROVED | DATE |
|---|---|---|---|---|---|
| KEN | 06-26-02 | MLE | 06-30-02 | JLW | 09-09-02 |

| SCALE | SIZE | DRAWING | SHT. | REV. |
|---|---|---|---|---|
| 1:2 | D | 003-0103-002 | 2 OF 2 | D |

UNIT OF MEAS.: PC

PARTS LIST

| QTY. | PART NUMBER | ITEM DESCRIPTION | ITEM |
|---|---|---|---|

| SIZE | DRAWING | SHT. | REV. |
|---|---|---|---|
| D | 003-0103-003EX | 1 OF 1 | C |

**PROPRIETARY INFORMATION**

INFORMATION CONTAINED HEREIN IS THE PROPERTY OF HURCO COMPANIES, INC. NO REPRODUCTION OR DISCLOSURE OF THIS INFORMATION SHALL BE MADE BY THE RECIPIENT TO ANY OTHER PERSON OR ORGANIZATION WITHOUT THE PRIOR WRITTEN CONSENT OF HURCO COMPANIES, INC.

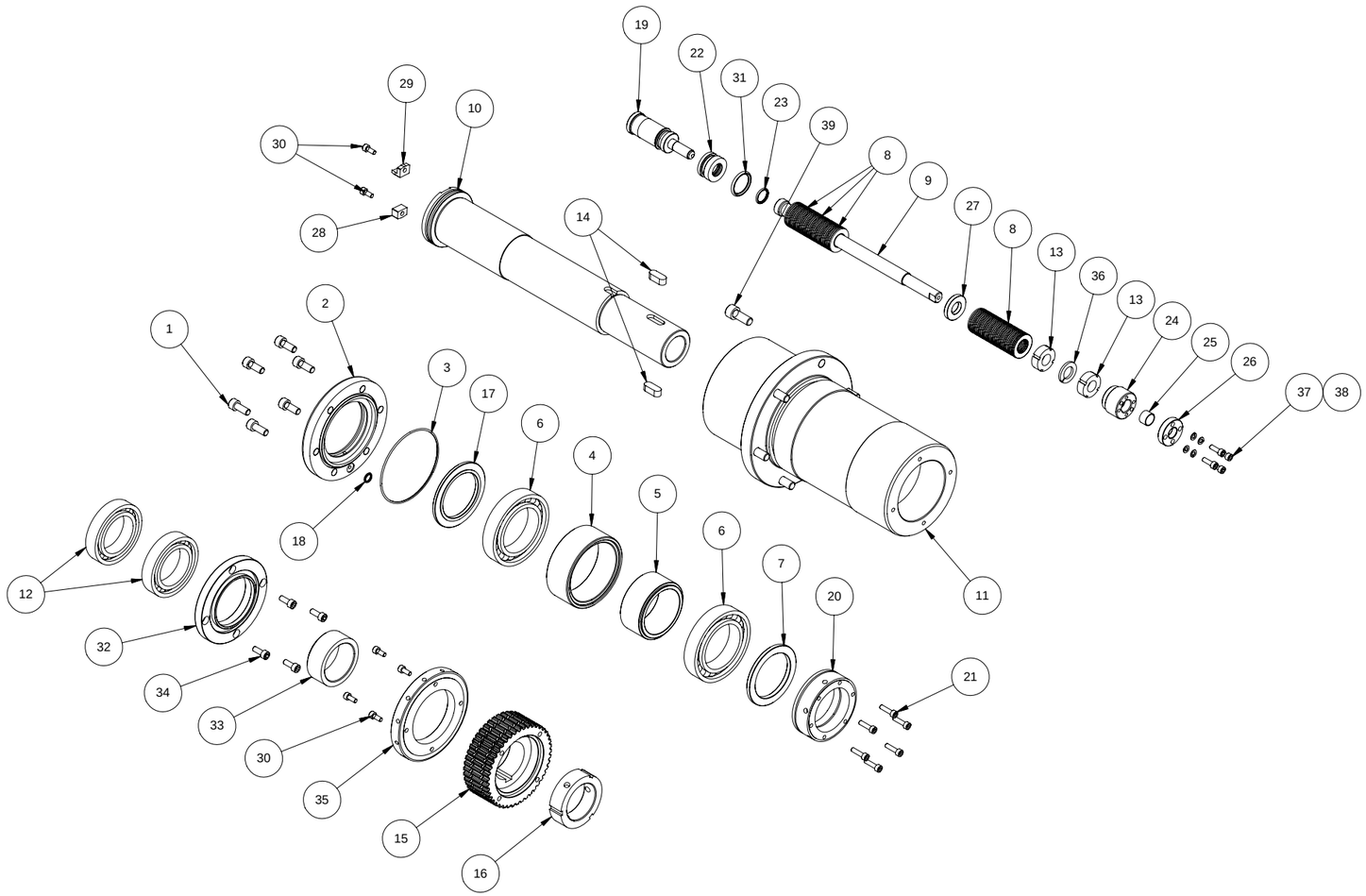


| | QTY. | PART NO. | DESCRIPTION | ITEM |
|---|---|---|---|---|
| C | 6 | 101-5011-007 | SHCS, M10 X 1.5 P X 25 LG | 39 |
| | 4 | 110-0046-006 | LOCKWASHER, M5, HELICAL SPRING | 38 |
| | 4 | 101-5007-022 | SHCS, M 5 X 0.8 P X 16 LG | 37 |
| | 1 | 110-0046-012 | LOCKWASHER, M16, HELICAL SPRING | 36 |
| | 1 | 803-0107-004 | WHEEL, BALANCE | 35 |
| | 4 | 101-5008-004 | SHCS, M 6 X 1.0 P X 16 LG | 34 |
| | 1 | 803-0112-004 | SPACER, UPPER | 33 |
| | 1 | 803-0110-006 | RETAINER, SPINDLE BEARING UPPER | 32 |
| | 1 | 608-2003-091 | O-RING P26 | 31 |
| | 6 | 101-5007-003 | SHCS, M 5 X 0.8 P X 12 LG | 30 |
| | 1 | 803-1023-010 | KEY, SPINDLE NOSE DRIVE, RIGHT | 29 |
| | 1 | 803-1023-009 | KEY, SPINDLE NOSE DRIVE, LEFT | 28 |
| | 1 | 803-1013-004 | WASHER, DISK SPRING | 27 |
| | 1 | 803-1010-006 | NUT, SPINDLE | 26 |
| | 1 | 219-0002-009 | BUSHING, 14 X 16 X 10 mm | 25 |
| | 1 | 803-1010-005 | NUT, DRAWBAR | 24 |
| | 1 | 608-2003-066 | O-RING | 23 |
| | 1 | 803-1042-037 | SPACER, DISK SPRING | 22 |
| | 6 | 101-5007-006 | SHCS, M 5 X 0.8 P X 20 LG | 21 |
| | 1 | 117-1004-003 | NUT, PRECISION | 20 |
| | 1 | 803-1070-002 | COLLET, TOOL RETENTION | 19 |
| | 1 | 608-2003-013 | O-RING, 9.0 X 12.0 X 1.9 mm | 18 |
| | 1 | 803-1042-036 | SPACER, FRONT | 17 |
| | 1 | 117-1004-002 | NUT, PRECISION | 16 |
| | 1 | 803-1046-029 | PULLEY, SPINDLE, 44T | 15 |
| B | 2 | 803-1023-006 | KEY, SPINDLE PULLEY | 14 |
| | 2 | 211-0087-058 | NUT, SPINDLE HOUSING | 13 |
| | 2 | 211-0001-033 | BEARING | 12 |
| | 1 | 803-1054-007 | CARTRIDGE, SPINDLE | 11 |
| | 1 | 803-1016-008 | SHAFT, SPINDLE | 10 |
| | 1 | 803-1065-004 | DRAWBAR, TOOL RETENTION | 9 |
| | 74 | 713-0020-840 | DISK SPRING | 8 |
| | 1 | 803-1042-032 | SPACER , MIDDLE | 7 |
| | 2 | 211-0001-032 | BEARING | 6 |
| | 1 | 803-1042-031 | SPACER, INNER | 5 |
| | 1 | 803-1042-030 | SPACER, OUTER | 4 |
| | 1 | 608-2003-049 | O-RING | 3 |
| | 1 | 803-1012-018 | RETAINER, SPINDLE BEARING, LOWER | 2 |
| | 6 | 101-5010-005 | SHCS, M 8 X 1.25 P X 20 LG | 1 |

| REV | E.C.N. NO. | REVISION DESCRIPTION | REV BY | DATE | CHK BY | DATE | APPD BY | DATE |
|---|---|---|---|---|---|---|---|---|
| C | 15706 | ADDED ITEM 39 | GLH | 03-0 2003 | PFE | 03-0 2003 | JLW | 03-09 2002 |
| B | 15517 | ITEM 14 WAS QTY 1 | KEN | 06-19 2002 | MLE | 06-20 2002 | | |
| A | 15486 | ORIGINAL RELEASE | | | | | | |

SURFACE TREATMENT: NONE

HEAT TREATMENT: NONE

FIRST USED ON: VM1

EXCEPT AS NOTED: ALL CORNERS MUST BE AS FOLLOWS
INSIDE: 1.3 X 45° OR 1.3 R MAX
OUTSIDE: 0.8 X 45° OR 1.3 R

EXCEPT AS NOTED: ALL DIMENSIONS IN METRIC TOLERANCE
DECIMAL: .0 ±0.8 .00 ±0.4 .000 ±0.13 .0000 ±0.013 ANGULAR ±0°30'

EXCEPT AS NOTED: WELDING TOLERANCE MUST BE AS FOLLOWS ±3

HURCO COMPANIES, INC.
INDIANAPOLIS, IN U.S.A.

DESCRIPTION: ASS'Y, SPINDLE (8K)

| DRAWN | DATE | CHECKED | DATE | APPROVED | DATE |
|---|---|---|---|---|---|
| KEN | 06-22-02 | MLE | 06-25-02 | JLW | 09-09-02 |

| SCALE | SIZE | DRAWING | SHT. | REV. |
|---|---|---|---|---|
| 1:5 | D | 003-0103-003EX | 1 OF 1 | C |

UNIT OF MEAS.: PC

# Ass'y., Transmission, X Axis, 003-0104-001—Rev. A

| SIZE | DRAWING | SHT. | REV. |
|---|---|---|---|
| D | 003-0104-001 | 1 OF 1 | A |

PROPRIETARY INFORMATION

INFORMATION CONTAINED HEREIN IS THE PROPERTY OF HURCO COMPANIES, INC. NO REPRODUCTION OR DISCLOSURE OF THIS INFORMATION SHALL BE MADE BY THE RECIPIENT TO ANY OTHER PERSON OR ORGANIZATION WITHOUT THE PRIOR WRITTEN CONSENT OF HURCO COMPANIES, INC.

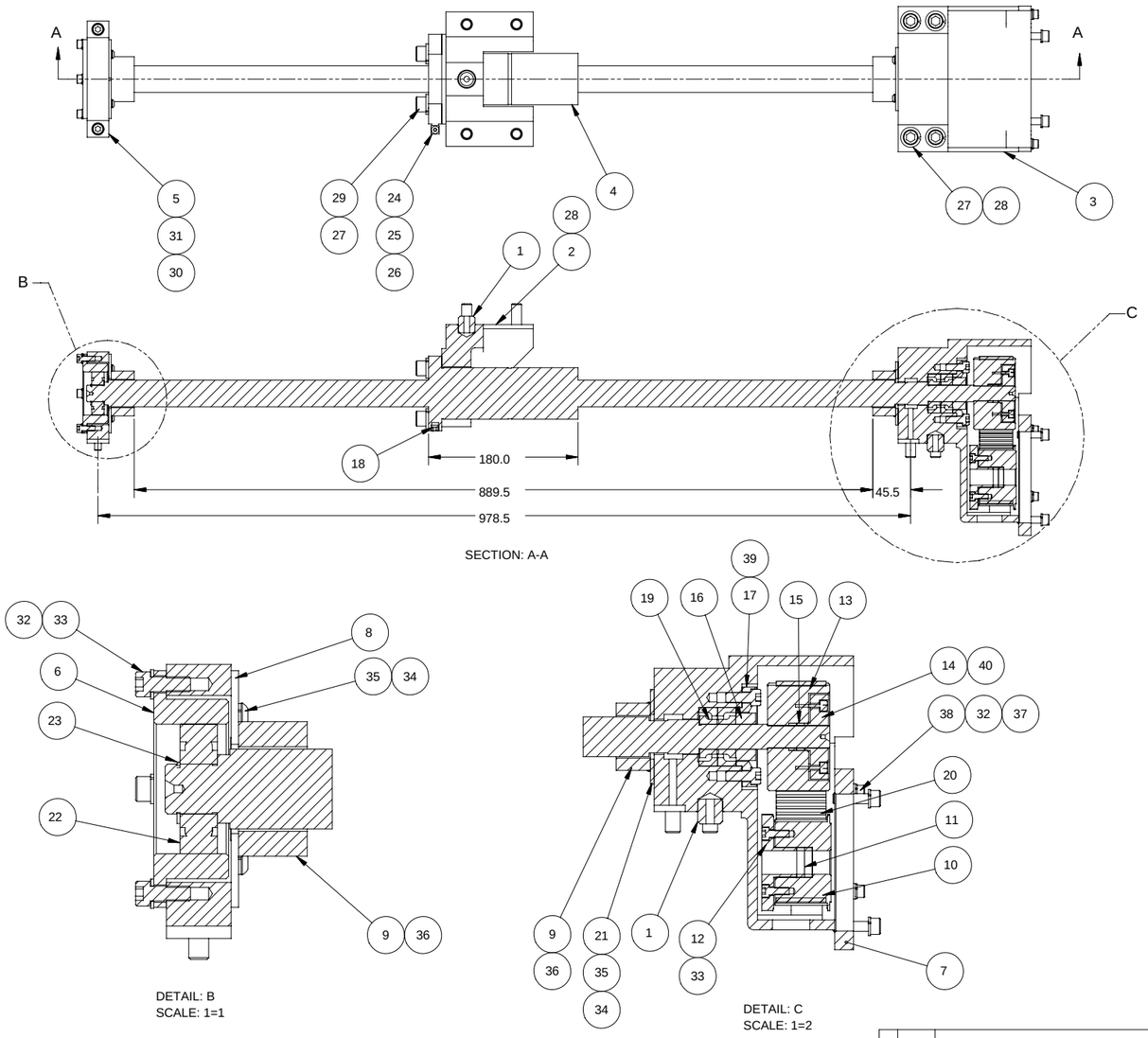


SECTION: A-A




DETAIL: B
SCALE: 1=1




DETAIL: C
SCALE: 1=2

| QTY. | PART NO. | DESCRIPTION | ITEM |
|---|---|---|---|
| 4 | 101-5008-006 | SHCS, M 6 X 1.0 P X 20 LG | 40 |
| 4 | 101-5010-005 | SHCS, M 8 X 1.25 P X 20 LG | 39 |
| 4 | 101-5008-009 | SHCS, M 6 X 1.0 P X 30 LG | 38 |
| 4 | 110-5001-004 | WASHER, FLAT, M6 | 37 |
| 8 | 102-5002-005 | FHCS, M 4 X 0.7 P X 20 LG | 36 |
| 8 | 108-5003-004 | BHCS, M 5 X 0.8 P X 12 LG | 35 |
| 8 | 110-0046-006 | LOCKWASHER, M5, HELICAL SPRING | 34 |
| 8 | 101-5008-004 | SHCS, M 6 X 1.0 P X 16 LG | 33 |
| 8 | 110-0046-007 | LOCKWASHER, M6, HELICAL SPRING | 32 |
| 6 | 101-5010-008 | SHCS, M 8 X 1.25 P X 30 LG | 31 |
| 6 | 110-0046-008 | LOCKWASHER, M8, HELICAL SPRING | 30 |
| 4 | 101-5012-005 | SHCS, M12 X 1.75 P X 40 LG | 29 |
| 8 | 101-5012-007 | SHCS, M12 X 1.75 P X 50 LG | 28 |
| 8 | 110-0046-010 | LOCKWASHER, M12, HELICAL SPRING | 27 |
| 1 | 506-3023-010 | SLEEVE, 4 DIA TUBING | 26 |
| 1 | 506-3023-009 | BUSHING, 4.0 DIA TUBING x M8 | 25 |
| 1 | 506-3025-015 | ADAPTOR, STRAIGHT, PH-401 | 24 |
| 1 | 113-0001-042 | RING, RETAINING, S20 | 23 |
| 1 | 211-0001-071 | BEARING 20 x 52 x 15 mm | 22 |
| 1 | 803-1000-092 | PLATE, STOP | 21 |
| 1 | 204-0008-035 | BELT, 450-5GT-40 | 20 |
| 2 | 211-0001-030 | BEARING, 30 x 62 | 19 |
| 1 | 506-6058-005 | PLUG, SOCKET, PT 1/8" | 18 |
| 1 | 803-1012-033 | RETAINER, X-Y AXIS BEARING | 17 |
| 1 | 117-1004-001 | NUT, PRECISION, M20 x 1.0 P | 16 |
| 2 | 219-0001-049 | LOCKING ELEMENT, 18 x 22 | 15 |
| 1 | 803-1012-034 | RETAINER, X-Y BALLSCREW PULLEY | 14 |
| 1 | 803-0105-004 | PULLEY, BALL SCREW, X/Y | 13 |
| 1 | 803-0110-001 | RETAINER, X/Y MOTOR PULLEY | 12 |
| 2 | 219-0001-038 | LOCKING ELEMENT, 19 x 24 | 11 |
| 1 | 803-0109-001 | PULLEY, X/Y SERVO MOTOR | 10 |
| 2 | 803-1036-007 | STOP, AXIS, HARD | 9 |
| 1 | 803-0100-003 | PLATE, STOP, X/Y | 8 |
| 1 | 803-4001-014 | PLATE, X MOTOR MOUNTING | 7 |
| 1 | 803-0111-001 | HOUSING, END AXIS BEARING, X/Y | 6 |
| 1 | 803-0101-012 | BRACKET, END AXIS BEARING | 5 |
| 1 | 803-0105-001 | BALLSCREW, X-AXIS | 4 |
| 1 | 803-1033-015 | HOUSING, X/Y AXIS TRANSMISSION | 3 |
| 1 | 803-1002-163 | BRACKET, NUT, X-AXIS | 2 |
| 2 | 803-1022-001 | PIN, LOCATING | 1 |

| REV | E.C.N. NO. | REVISION DESCRIPTION | REV BY | DATE | CHK BY | DATE | APPD BY | DATE |
|---|---|---|---|---|---|---|---|---|
| A | 15486 | ORIGINAL RELEASE | | | | | | |

SURFACE TREATMENT: NONE

HEAT TREATMENT: NONE

FIRST USED ON: VM 1

EXCEPT AS NOTED: ALL CORNERS MUST BE AS FOLLOWS
INSIDE: 1.3 X 45° OR 1.3 R MAX
OUTSIDE: 0.8 X 45° OR 1.3 R

EXCEPT AS NOTED: WELDING TOLERANCE MUST BE AS FOLLOWS ±3

EXCEPT AS NOTED: ALL DIMENSIONS IN METRIC TOLERANCE
DECIMAL: .0 ±0.8; .00 ±0.4; .000 ±0.13; .0000 ±0.013; ANGULAR ±0°30'

HURCO COMPANIES, INC.
INDIANAPOLIS, IN U.S.A.

DESCRIPTION: ASS'Y, TRANSMISSION, X AXIS

| DRAWN | DATE | CHECKED | DATE | APPROVED | DATE |
|---|---|---|---|---|---|
| JTU | 06/20/02 | MLE | 06/21/02 | JLW | 09-25-02 |

SCALE: 1:3 | UNIT OF MEAS.: PC | SIZE: D | DRAWING: 003-0104-001 | SHT. 1 OF 1 | REV. A

| SIZE | DRAWING | SHT. | REV. |
|---|---|---|---|
| D | 003-0104-002 | 1 OF 1 | A |

PROPRIETARY INFORMATION

INFORMATION CONTAINED HEREIN IS THE PROPERTY OF HURCO COMPANIES, INC. NO REPRODUCTION OR DISCLOSURE OF THIS INFORMATION SHALL BE MADE BY THE RECIPIENT TO ANY OTHER PERSON OR ORGANIZATION WITHOUT THE PRIOR WRITTEN CONSENT OF HURCO COMPANIES, INC.

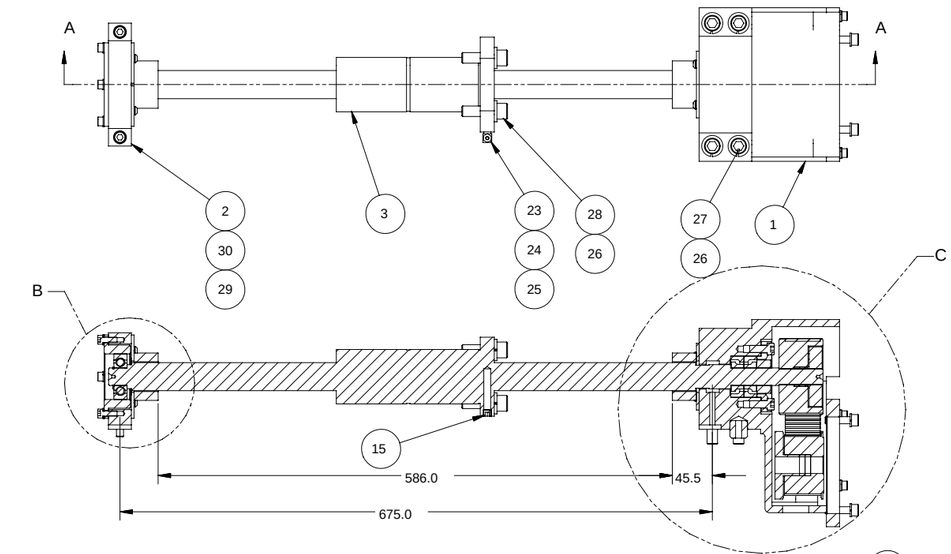


SECTION: A-A

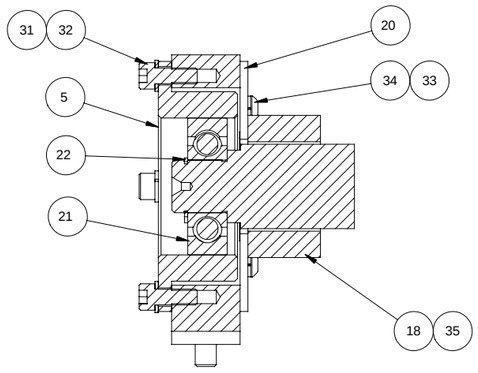


DETAIL: B
SCALE: 1=1

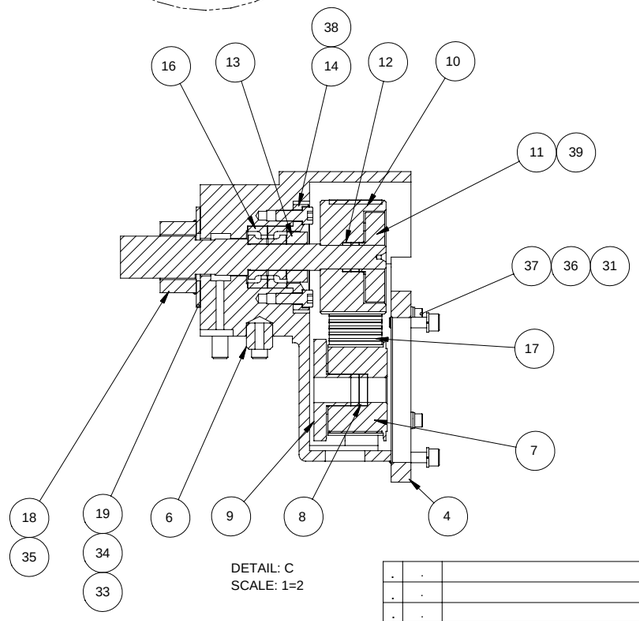


DETAIL: C
SCALE: 1=2

| QTY. | PART NO. | DESCRIPTION | ITEM |
|---|---|---|---|
| 4 | 101-5008-006 | SHCS, M 6 X 1.0 P X 20 LG | 39 |
| 4 | 101-5010-005 | SHCS, M 8 X 1.25 P X 20 LG | 38 |
| 4 | 101-5008-009 | SHCS, M 6 X 1.0 P X 30 LG | 37 |
| 4 | 110-5001-004 | WASHER, FLAT, M6 | 36 |
| 8 | 102-5002-005 | FHCS, M 4 X 0.7 P X 20 LG | 35 |
| 8 | 108-5003-004 | BHCS, M 5 X 0.8 P X 12 LG | 34 |
| 8 | 110-0046-006 | LOCKWASHER, M5, HELICAL SPRING | 33 |
| 8 | 101-5008-004 | SHCS, M 6 X 1.0 P X 16 LG | 32 |
| 8 | 110-0046-007 | LOCKWASHER, M6, HELICAL SPRING | 31 |
| 6 | 101-5010-008 | SHCS, M 8 X 1.25 P X 30 LG | 30 |
| 6 | 110-0046-008 | LOCKWASHER, M8, HELICAL SPRING | 29 |
| 4 | 101-5012-005 | SHCS, M12 X 1.75 P X 40 LG | 28 |
| 4 | 101-5012-007 | SHCS, M12 X 1.75 P X 50 LG | 27 |
| 8 | 110-0046-010 | LOCKWASHER, M12, HELICAL SPRING | 26 |
| 1 | 506-3023-010 | SLEEVE, 4 DIA TUBING | 25 |
| 1 | 506-3023-009 | BUSHING, 4.0 DIA TUBING x M8 | 24 |
| 1 | 506-3025-015 | ADAPTOR, STRAIGHT, PH-401 | 23 |
| 1 | 113-0001-042 | RING, RETAINING, S20 | 22 |
| 1 | 211-0001-071 | BEARING 20 x 52 x 15 mm | 21 |
| 1 | 803-0100-003 | PLATE, STOP, X/Y | 20 |
| 1 | 803-1000-092 | PLATE, STOP | 19 |
| 2 | 803-1036-007 | STOP, AXIS, HARD | 18 |
| 1 | 204-0008-035 | BELT, 450-5GT-40 | 17 |
| 2 | 211-0001-030 | BEARING, 30 x 62 | 16 |
| 1 | 506-6058-005 | PLUG, SOCKET, PT 1/8" | 15 |
| 1 | 803-1012-033 | RETAINER, X-Y AXIS BEARING | 14 |
| 1 | 117-1004-001 | NUT, PRECISION, M20 x 1.0 P | 13 |
| 2 | 219-0001-049 | LOCKING ELEMENT, 18 x 22 | 12 |
| 1 | 803-1012-034 | RETAINER, X-Y BALLSCREW PULLEY | 11 |
| 1 | 803-0105-004 | PULLEY, BALL SCREW, X/Y | 10 |
| 1 | 803-0110-001 | RETAINER, X/Y MOTOR PULLEY | 9 |
| 2 | 219-0001-038 | LOCKING ELEMENT, 19 x 24 | 8 |
| 1 | 803-0109-001 | PULLEY, X/Y SERVO MOTOR | 7 |
| 1 | 803-1022-001 | PIN, LOCATING | 6 |
| 1 | 803-0111-001 | HOUSING, AXIS END BEARING, X/Y | 5 |
| 1 | 803-4001-014 | PLATE, X MOTOR MOUNTING | 4 |
| 1 | 803-0105-002 | BALLSCREW, Y-AXIS | 3 |
| 1 | 803-0101-012 | BRACKET, AXIS END BEARING | 2 |
| 1 | 803-1033-015 | HOUSING, X/Y AXIS TRANSMISSION | 1 |

| REV | E.C.N. NO. | REVISION DESCRIPTION | REV BY | DATE | CHK BY | DATE | APPD BY | DATE |
|---|---|---|---|---|---|---|---|---|
| A | 15486 | ORIGINAL RELEASE | | | | | | |

SURFACE TREATMENT: NONE
HEAT TREATMENT: NONE
FIRST USED ON: VM 1

EXCEPT AS NOTED: ALL CORNERS MUST BE AS FOLLOWS
INSIDE: 1.3 X 45° OR 1.3 R MAX
OUTSIDE: 0.8 X 45° OR 1.3 R

EXCEPT AS NOTED: WELDING TOLERANCE MUST BE AS FOLLOWS ±3

EXCEPT AS NOTED: ALL DIMENSIONS IN METRIC TOLERANCE
DECIMAL: .0 ±0.8, .00 ±0.4, .000 ±0.13, .0000 ±0.013, ANGULAR ±0°30'

HURCO COMPANIES, INC.
INDIANAPOLIS, IN U.S.A.

DESCRIPTION: ASS'Y, TRANSMISSION, Y AXIS

| DRAWN | DATE | CHECKED | DATE | APPROVED | DATE |
|---|---|---|---|---|---|
| JTU | 06/20/02 | MLE | 06/21/02 | JLW | 09-26-02 |

SCALE: 1:3
UNIT OF MEAS.: PC
SIZE: D
DRAWING: 003-0104-002
SHT. 1 OF 1
REV. A

# Ass'y., Transmission, Z-Axis, 003-0104-004—Rev. B

| SIZE | DRAWING | SHT. | REV. |
|---|---|---|---|
| D | 003-0104-004 | 1 OF 1 | B |

PROPRIETARY INFORMATION

INFORMATION CONTAINED HEREIN IS THE PROPERTY OF HURCO COMPANIES, INC. NO REPRODUCTION OR DISCLOSURE OF THIS INFORMATION SHALL BE MADE BY THE RECIPIENT TO ANY OTHER PERSON OR ORGANIZATION WITHOUT THE PRIOR WRITTEN CONSENT OF HURCO COMPANIES, INC.

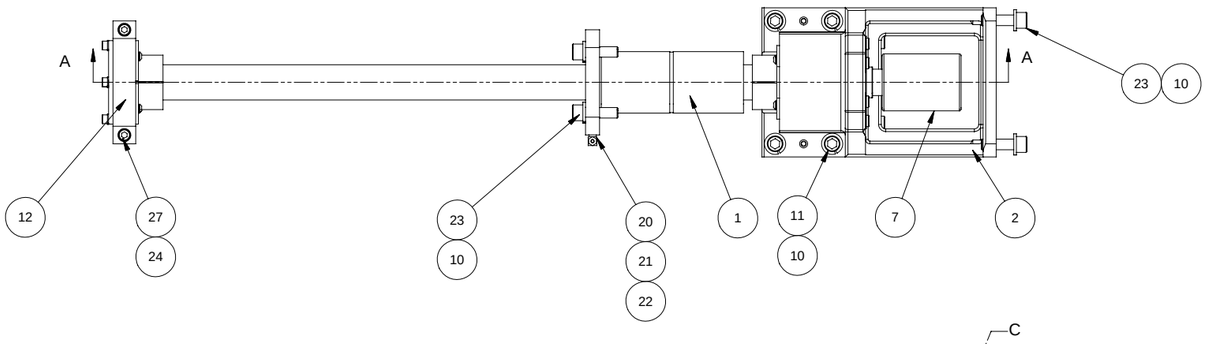


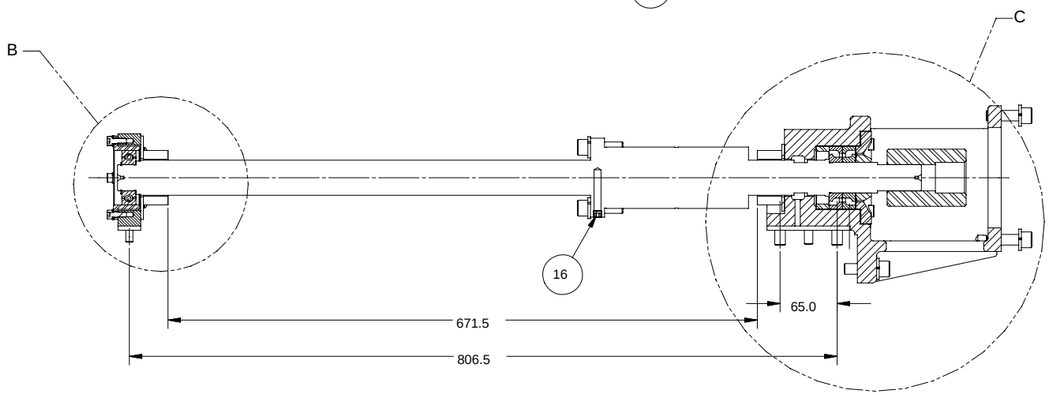


SECTION: A-A

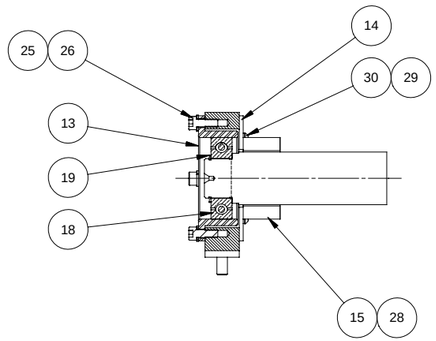


DETAIL: B
SCALE: 1=1

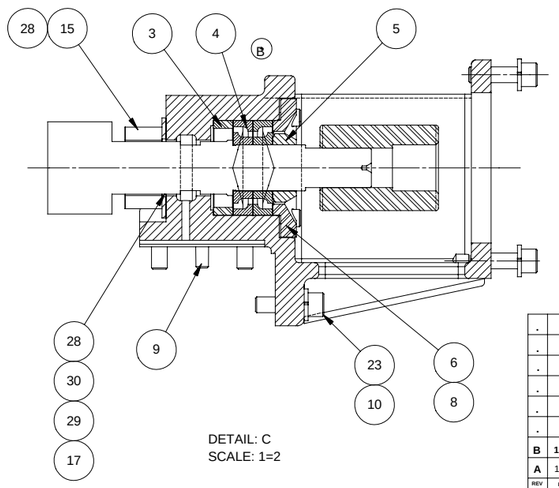


DETAIL: C
SCALE: 1=2

| ITEM | DESCRIPTION | PART NO. | QTY. |
|---|---|---|---|
| 30 | BHCS, M 5 X 0.8 P X 12 LG | 108-5003-004 | 8 |
| 29 | LOCKWASHER, M5, HELICAL SPRING | 110-0046-006 | 8 |
| 28 | FHCS, M 4 X 0.7 P X 20 LG | 102-5002-005 | 8 |
| 27 | SHCS, M 8 X 1.25 P X 35 LG | 101-5010-009 | 2 |
| 26 | SHCS, M 6 X 1.0 P X 16 LG | 101-5008-004 | 4 |
| 25 | LOCKWASHER, M6, HELICAL SPRING | 110-0046-007 | 4 |
| 24 | LOCKWASHER, M8, HELICAL SPRING | 110-0046-008 | 2 |
| 23 | SHCS, M12 X 1.75 P X 40 LG | 101-5012-005 | 10 |
| 22 | SLEEVE, 4 DIA TUBING | 506-3023-010 | 1 |
| 21 | BUSHING, 4.0 DIA TUBING x M8 | 506-3023-009 | 1 |
| 20 | ADAPTOR, STRAIGHT, PH-401 | 506-3025-015 | 1 |
| 19 | RING, RETAINING, 30 DIA | 113-0001-043 | 1 |
| 18 | BEARING 30 x 62 x 16 mm | 211-0015-019 | 1 |
| 17 | PLATE, STOP | 803-1000-091 | 1 |
| 16 | PLUG, SOCKET, PT 1/8" | 506-6058-005 | 1 |
| 15 | STOP, HARD, Z AXIS UPPER | 803-0206-011 | 2 |
| 14 | PLATE, STOP, Z AXIS | 803-0100-004 | 1 |
| 13 | HOUSING, Z AXIS END BEARING | 803-0111-002 | 1 |
| 12 | BRACKET, AXIS END BEARING | 803-0101-012 | 1 |
| 11 | SHCS, M12 X 1.75 P X 50 LG | 101-5012-007 | 4 |
| 10 | LOCKWASHER, M12, HELICAL SPRING | 110-0046-010 | 14 |
| 9 | PIN, TAPER, PULL, #7 X 45 LG | 112-0054-016 | 2 |
| 8 | SHCS, M 8 X 1.25 P X 20 LG | 101-5010-005 | 6 |
| 7 | COUPLING, FLEX | 205-0010-019 | 1 |
| 6 | RETAINER, Z-AXIS BEARING | 803-1012-007 | 1 |
| 5 | NUT, PRECISION M35 x 1.5 P | 211-0086-002 | 1 |
| 4 | BEARING 35 x 72 | 211-0015-024 | 2 |
| 3 | SPACER, Z AXIS BEARING | 803-0200-004 | 1 |
| 2 | HOUSING, Z-AXIS TRANSMISSION | 803-1033-013 | 1 |
| 1 | BALLSCREW, Z-AXIS | 803-0105-003 | 1 |

| REV | E.C.N. NO. | REVISION DESCRIPTION | REV BY | DATE | CHK BY | DATE | APPD BY | DATE |
|---|---|---|---|---|---|---|---|---|
| B | 15793 | REPOSITION BEARINGS ON DRIVE SIDE TO BACK TO BACK | SMc | 12 20 04 | PFB | 12 20 04 | PFB | 12 20 04 |
| A | 15606 | ORIGINAL RELEASE | | | | | | |

SURFACE TREATMENT: NONE

HEAT TREATMENT: NONE

FIRST USED ON: VM1

EXCEPT AS NOTED: ALL CORNERS MUST BE AS FOLLOWS INSIDE: 1.3 X 45° OR 1.3 R MAX OUTSIDE: 0.8 X 45° OR 1.3 R

EXCEPT AS NOTED: ALL DIMENSIONS IN METRIC TOLERANCE DECIMAL .0 ±0.8 .00 ±0.4 .000 ±0.13 .0000 ±0.013 ANGULAR ±1°30'

EXCEPT AS NOTED: WELDING TOLERANCE MUST BE AS FOLLOWS ±3

HURCO COMPANIES, INC.
INDIANAPOLIS, IN U.S.A.

DESCRIPTION: ASS'Y, TRANSMISSION, Z-AXIS

| DRAWN | DATE | CHECKED | DATE | APPROVED | DATE |
|---|---|---|---|---|---|
| Kevin | 01-15-03 | MLE | 01-15-03 | JLW | 5-23-03 |

SCALE: 1:3 | UNIT OF MEAS.: PC | SIZE: D | DRAWING: 003-0104-004 | SHT. 1 OF 1 | REV. B

| SIZE | DRAWING | SHT. | REV. |
|---|---|---|---|
| D | 003-0105-001 | 1 OF 1 | A |

PROPRIETARY INFORMATION

INFORMATION CONTAINED HEREIN IS THE PROPERTY OF HURCO COMPANIES, INC. NO REPRODUCTION OR DISCLOSURE OF THIS INFORMATION SHALL BE MADE BY THE RECIPIENT TO ANY OTHER PERSON OR ORGANIZATION WITHOUT THE PRIOR WRITTEN CONSENT OF HURCO COMPANIES, INC.

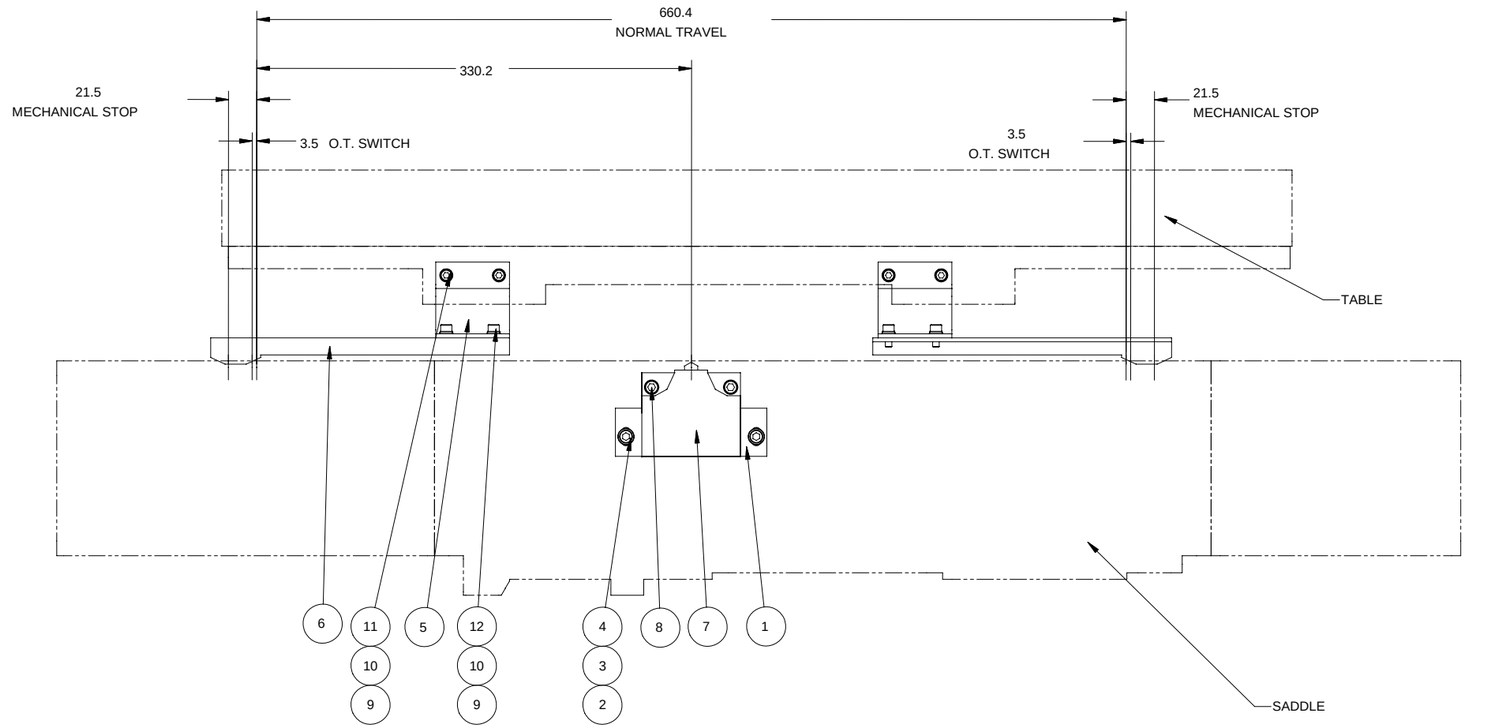


| ITEM | QTY. | PART NO. | DESCRIPTION |
|---|---|---|---|
| 12 | 4 | 101-5007-003 | SHCS, M 5 X 0.8 P X 12 LG |
| 11 | 4 | 101-5007-022 | SHCS, M 5 X 0.8 P X 16 LG |
| 10 | 8 | 110-0046-006 | LOCKWASHER, M5, HELICAL SPRING |
| 9 | 8 | 110-5001-003 | WASHER, FLAT, M5 |
| 8 | 2 | 101-5008-006 | SHCS, M 6 X 1.0 P X 20 LG |
| 7 | 1 | 404-5202-021 | SWITCH, LIMIT, 2 PLUNGER |
| 6 | 2 | 803-0106-002 | DOG, LIMIT SWITCH, X AXIS |
| 5 | 2 | 803-0101-002 | BRACKET, DOG, X AXIS |
| 4 | 2 | 101-5008-004 | SHCS, M 6 X 1.0 P X 16 LG |
| 3 | 2 | 110-0046-007 | LOCKWASHER, M6, HELICAL SPRING |
| 2 | 2 | 110-5001-004 | WASHER, FLAT, M6 |
| 1 | 1 | 803-0101-003 | BRACKET, LIMIT SWITCH, X AXIS |

| REV | E.C.N. NO. | REVISION DESCRIPTION | REV BY | DATE | CHK BY | DATE | APPD BY | DATE |
|---|---|---|---|---|---|---|---|---|
| A | 15483 | REL | | | | | | |

SURFACE TREATMENT: NONE

HEAT TREATMENT: NONE

FIRST USED ON: VM1

EXCEPT AS NOTED: ALL CORNERS MUST BE AS FOLLOWS
INSIDE: 1.3 X 45° OR 1.3 R MAX
OUTSIDE: 0.8 X 45° OR 1.3 R

EXCEPT AS NOTED: WELDING TOLERANCE MUST BE AS FOLLOWS ±3

EXCEPT AS NOTED: ALL DIMENSIONS IN METRIC TOLERANCE
DECIMAL .0 ±0.8, .00 ±0.4, .000 ±0.13, .0000 ±0.013
ANGULAR ±0°30'

HURCO COMPANIES, INC.
INDIANAPOLIS, IN U.S.A.

DESCRIPTION: ASS'Y LIMIT SWITCH & DOG, X AXIS

| DRAWN | DATE | CHECKED | DATE | APPROVED | DATE |
|---|---|---|---|---|---|
| KEN | 06-12-02 | MLE | 06-15-02 | JLW | 09-09-02 |

| SCALE | SIZE | DRAWING | SHT. | REV. |
|---|---|---|---|---|
| 1:2 | D | 003-0105-001 | 1 OF 1 | A |

UNIT OF MEAS. PC

MECHANICAL STOP

| SIZE | DRAWING | SHT. | REV. |
|---|---|---|---|
| D | 003-0105-002 | 1 OF 1 | A |

PROPRIETARY INFORMATION

INFORMATION CONTAINED HEREIN IS THE PROPERTY OF HURCO COMPANIES, INC. NO REPRODUCTION OR DISCLOSURE OF THIS INFORMATION SHALL BE MADE BY THE RECIPIENT TO ANY OTHER PERSON OR ORGANIZATION WITHOUT THE PRIOR WRITTEN CONSENT OF HURCO COMPANIES, INC.

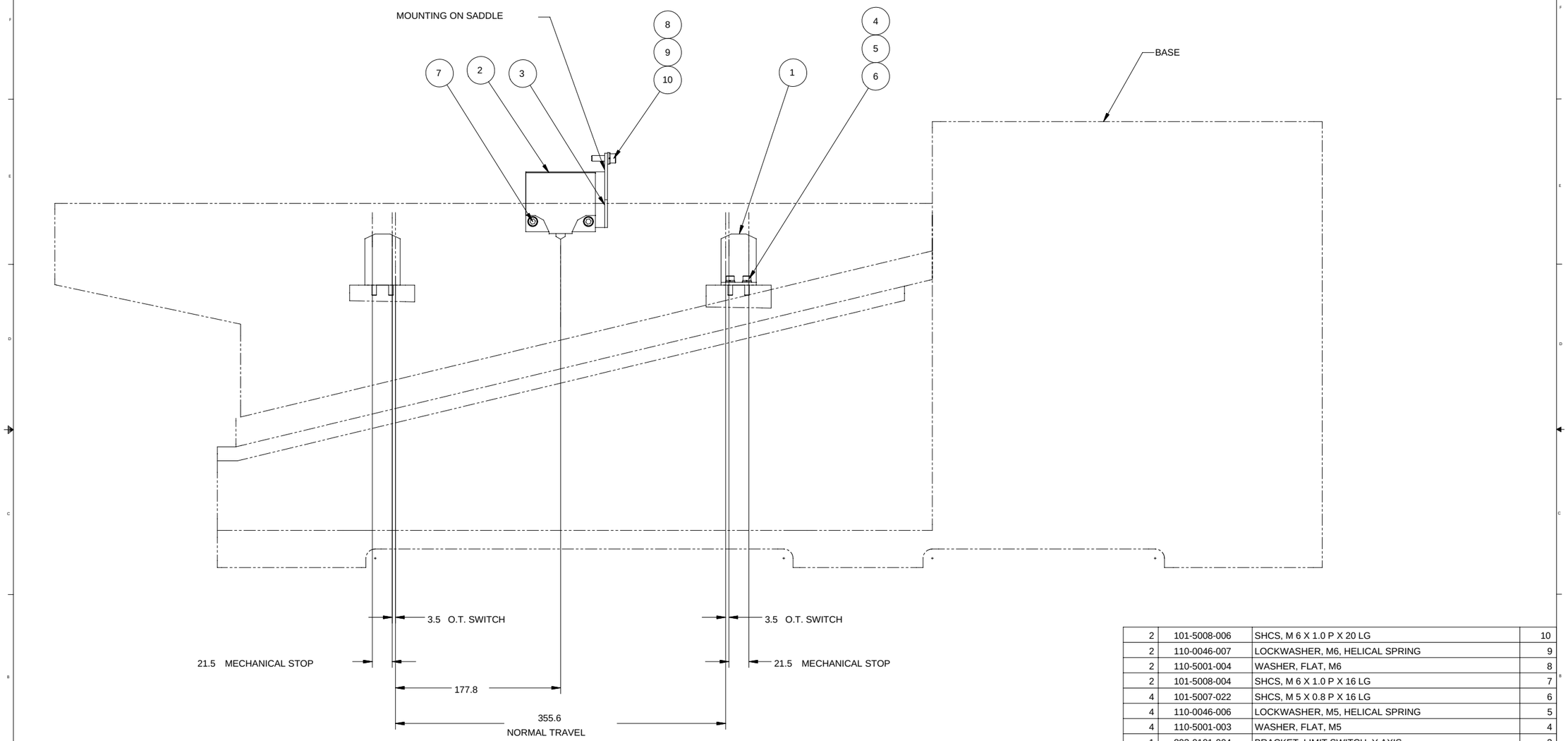


| QTY. | PART NO. | DESCRIPTION | ITEM |
|---|---|---|---|
| 2 | 101-5008-006 | SHCS, M 6 X 1.0 P X 20 LG | 10 |
| 2 | 110-0046-007 | LOCKWASHER, M6, HELICAL SPRING | 9 |
| 2 | 110-5001-004 | WASHER, FLAT, M6 | 8 |
| 2 | 101-5008-004 | SHCS, M 6 X 1.0 P X 16 LG | 7 |
| 4 | 101-5007-022 | SHCS, M 5 X 0.8 P X 16 LG | 6 |
| 4 | 110-0046-006 | LOCKWASHER, M5, HELICAL SPRING | 5 |
| 4 | 110-5001-003 | WASHER, FLAT, M5 | 4 |
| 1 | 803-0101-004 | BRACKET, LIMIT SWITCH, Y AXIS | 3 |
| 1 | 404-5202-021 | SWITCH, LIMIT, 2 PLUNGER | 2 |
| 2 | 803-0106-003 | DOG,LIMIT SWITCH, Y AXIS | 1 |

| REV | E.C.N. NO. | REVISION DESCRIPTION | REV BY | DATE | CHK BY | DATE | APPD BY | DATE |
|---|---|---|---|---|---|---|---|---|
| A | 15483 | REL | | | | | | |

SURFACE TREATMENT: NONE

HEAT TREATMENT: NONE

FIRST USED ON: VM1

EXCEPT AS NOTED: ALL CORNERS MUST BE AS FOLLOWS
INSIDE: 1.3 X 45° OR 1.3 R MAX
OUTSIDE: 0.8 X 45° OR 1.3 R

EXCEPT AS NOTED: WELDING TOLERANCE MUST BE AS FOLLOWS ±3

EXCEPT AS NOTED: ALL DIMENSIONS IN METRIC TOLERANCE
DECIMAL .0 ±0.8, .00 ±0.4, .000 ±0.13, .0000 ±0.013
ANGULAR ±0°30'

HURCO COMPANIES, INC.
INDIANAPOLIS, IN U.S.A.

DESCRIPTION: ASS'Y LIMIT SWITCH & DOG, Y AXIS

| DRAWN | DATE | CHECKED | DATE | APPROVED | DATE |
|---|---|---|---|---|---|
| KEN | 06-13-02 | MLE | 06-14-02 | JLW | 09-09-02 |

| SCALE | SIZE | DRAWING | SHT. | REV. |
|---|---|---|---|---|
| 1:2 | D | 003-0105-002 | 1 OF 1 | A |

UNIT OF MEAS. PC

| SIZE | DRAWING | SHT. | REV. |
|---|---|---|---|
| D | 003-0105-003 | 1 OF 1 | A |

**PROPRIETARY INFORMATION**

INFORMATION CONTAINED HEREIN IS THE PROPERTY OF HURCO COMPANIES, INC. NO REPRODUCTION OR DISCLOSURE OF THIS INFORMATION SHALL BE MADE BY THE RECIPIENT TO ANY OTHER PERSON OR ORGANIZATION WITHOUT THE PRIOR WRITTEN CONSENT OF HURCO COMPANIES, INC.

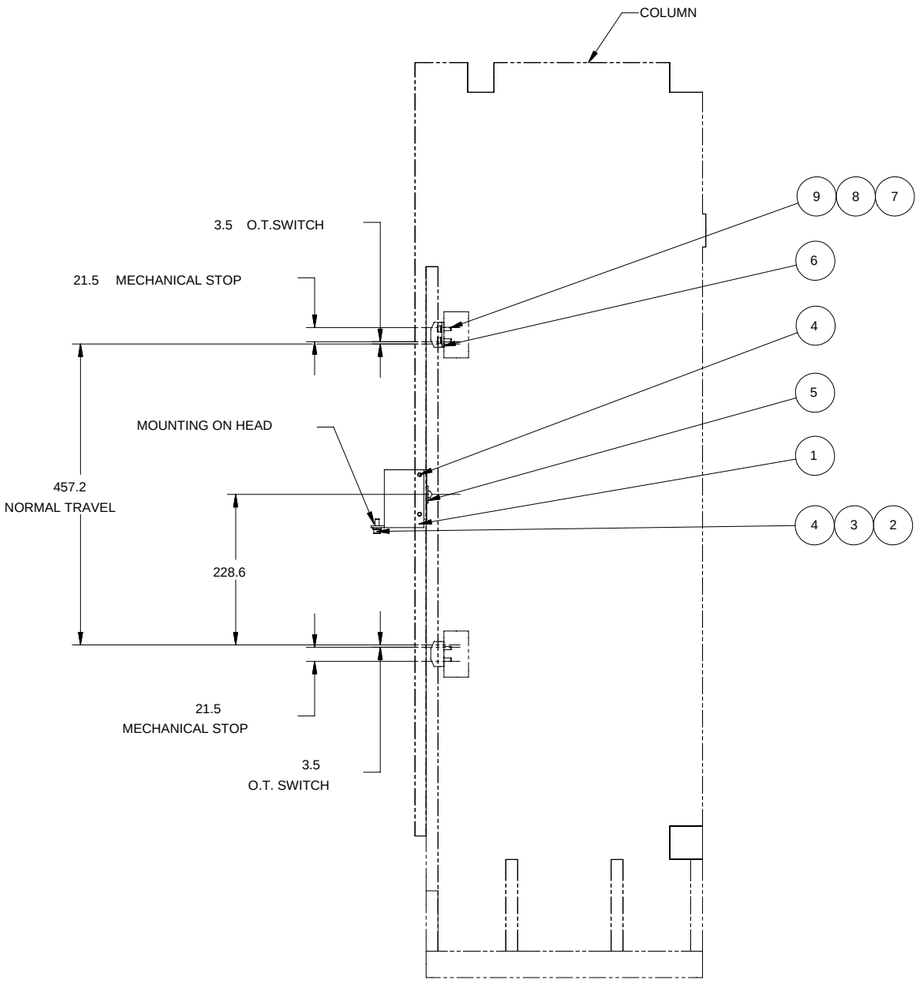


| QTY. | PART NO. | DESCRIPTION | ITEM |
|---|---|---|---|
| 4 | 101-5007-022 | SHCS, M 5 X 0.8 P X 16 LG | 9 |
| 4 | 110-0046-006 | LOCKWASHER, M5, HELICAL SPRING | 8 |
| 4 | 110-5001-003 | WASHER, FLAT, M5 | 7 |
| 2 | 803-0106-004 | DOG, LIMIT SWITCH, Z AXIS | 6 |
| 1 | 404-5202-021 | SWITCH, LIMIT, 2 PLUNGER | 5 |
| 4 | 101-5008-004 | SHCS, M 6 X 1.0 P X 16 LG | 4 |
| 2 | 110-0046-007 | LOCKWASHER, M6, HELICAL SPRING | 3 |
| 2 | 110-5001-004 | WASHER, FLAT, M6 | 2 |
| 1 | 803-0101-004 | BRACKET, LIMIT SWITCH, Y AXIS | 1 |

| REV | E.C.N. NO. | REVISION DESCRIPTION | REV BY | DATE | CHK BY | DATE | APPD BY | DATE |
|---|---|---|---|---|---|---|---|---|
| A | 15483 | REL | | | | | | |

SURFACE TREATMENT: NONE

HEAT TREATMENT: NONE

FIRST USED ON: VM1

EXCEPT AS NOTED: ALL CORNERS MUST BE AS FOLLOWS
INSIDE: 1.3 X 45° OR 1.3 R MAX
OUTSIDE: 0.8 X 45° OR 1.3 R

EXCEPT AS NOTED: WELDING TOLERANCE MUST BE AS FOLLOWS ±3

EXCEPT AS NOTED: ALL DIMENSIONS IN METRIC TOLERANCE
DECIMAL .0 ±0.8, .00 ±0.4, .000 ±0.13, .0000 ±0.013
ANGULAR ±5°30'

HURCO COMPANIES, INC.
INDIANAPOLIS, IN U.S.A.

DESCRIPTION: ASS'Y, LIMIT SWITCH & DOG, Z AXIS

| DRAWN | DATE | CHECKED | DATE | APPROVED | DATE |
|---|---|---|---|---|---|
| KEN | 06-13-02 | MLE | 06-14-02 | JLW | 09-09-02 |

SCALE: 1:4
UNIT OF MEAS.: PC
SIZE: D
DRAWING: 003-0105-003
SHT. 1 OF 1
REV. A

# Ass'y., Overarm Console, Exploded, 003-0105-005—Rev. C

| SIZE | DRAWING | SHT. | REV. | PROPRIETARY INFORMATION |
|---|---|---|---|---|
| D | 003-0105-005EX | 1 OF 1 | C | INFORMATION CONTAINED HEREIN IS THE PROPERTY OF HURCO COMPANIES, INC. NO REPRODUCTION OR DISCLOSURE OF THIS INFORMATION SHALL BE MADE BY THE RECIPIENT TO ANY OTHER PERSON OR ORGANIZATION WITHOUT THE PRIOR WRITTEN CONSENT OF HURCO COMPANIES, INC. |

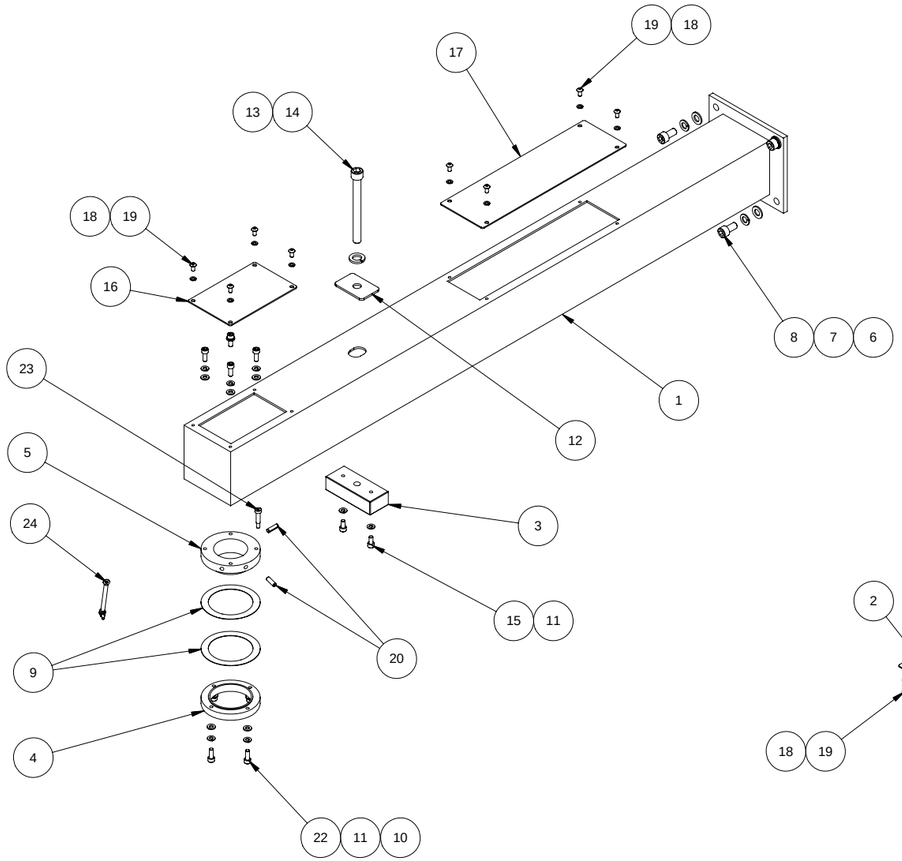


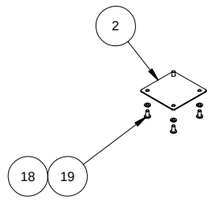


| ITEM | QTY. | PART NO. | DESCRIPTION |
|---|---|---|---|
| 1 | 1 | 803-0104-009 | OVER ARM, CONTROL CONSOLE |
| 2 | 1 | 803-1003-149 | COVER, CABINET |
| 3 | 1 | 803-0104-010 | SUPPORT, ARM |
| 4 | 1 | 803-1008-009 | SWIVEL, CONTROL CABINET |
| 5 | 1 | 803-1008-010 | SWIVEL, OVER ARM |
| 6 | 4 | 110-5001-006 | WASHER, FLAT, M10 |
| 7 | 4 | 110-0046-009 | LOCKWASHER, M10, HELICAL SPRING |
| 8 | 4 | 101-5011-005 | SHCS, M10 X 1.5 P X 20 LG |
| 9 | 2 | 605-5501-032 | WASHER, WAVE |
| 10 | 8 | 110-5001-004 | WASHER, FLAT, M6 |
| 11 | 10 | 110-0046-007 | LOCKWASHER, M6, HELICAL SPRING |
| 12 | 1 | 803-1013-002 | WASHER, OVER ARM |
| 13 | 1 | 803-1003-046 | COVER, CENTER ARM |
| 14 | 1 | 803-1003-045 | COVER, OVER ARM |
| 15 | 2 | 101-5008-003 | SHCS, M 6 X 1.0 P X 12 LG |
| 16 | 1 | 101-5012-017 | SHCS, M12 X 1.75 P X 120 LG |
| 17 | 1 | 110-0046-010 | LOCKWASHER, M12, HELICAL SPRING |
| 18 | 12 | 110-0046-006 | LOCKWASHER, M5, HELICAL SPRING |
| 19 | 12 | 108-5003-003 | BHSCS, M 5 X 0.8 P X 10 LG |
| 20 | 2 | 112-7004-005 | PIN, ROLL 6.0 DIA x 20 LG |
| 21 | 0 | 007-0012-003 | ASS'Y, MAX CONTROL CONSOLE |
| 22 | 8 | 101-5008-004 | SHCS, M 6 X 1.0 P X 16 LG |
| 23 | 1 | 115-5001-004 | SHSS, 6.0 mm DIA X 20.0 LG |
| 24 | 1 | 407-0001-110 | ASSY, ELECTRICAL CONSOLE ISOLATION |

| REV | E.C.N. NO. | REVISION DESCRIPTION | REV BY | DATE | CHK BY | DATE | APPD BY | DATE |
|---|---|---|---|---|---|---|---|---|
| C | 15464 | ITEM 21, WAS 007-0012-003, QTY 1 | | | | | | |
| B | 15505 | (1) WAS QTY 1; (2) ADDED ITEM 25 & 26 | JLW | 10-31-2002 | PFB | 10-31-2002 | PFB | 10-31-2002 |
| A | 15485 | ORIGINAL RELEASE | | | | | | |

SURFACE TREATMENT: NONE

HEAT TREATMENT: NONE

FIRST USED ON: VM1

EXCEPT AS NOTED: ALL CORNERS MUST BE AS FOLLOWS
INSIDE: 1.3 X 45° OR 1.3 R MAX
OUTSIDE: 0.8 X 45° OR 1.3 R

EXCEPT AS NOTED: ALL DIMENSIONS IN METRIC TOLERANCE
DECIMAL: .0 ±0.8, .00 ±0.4, .000 ±0.13, .0000 ±0.013, ANGULAR ±0°30'

EXCEPT AS NOTED: WELDING TOLERANCE MUST BE AS FOLLOWS
±3

HURCO COMPANIES, INC.
INDIANAPOLIS, IN U.S.A.

DESCRIPTION: ASS'Y, OVERARM CONSOLE, EXPLODED

| DRAWN | DATE | CHECKED | DATE | APPROVED | DATE |
|---|---|---|---|---|---|
| ROD | 7-02-02 | MLE | 7-04-02 | JLW | 09-23-02 |

| SCALE | SIZE | DRAWING | SHT. | REV. |
|---|---|---|---|---|
| 1:4 | D | 003-0105-005EX | 1 OF 1 | C |

UNIT OF MEAS.: PC

| SIZE | DRAWING | SHT. | REV. |
|---|---|---|---|
| D | 003-0105-010 | 1 OF 1 | A |

PROPRIETARY INFORMATION

INFORMATION CONTAINED HEREIN IS THE PROPERTY OF HURCO COMPANIES, INC. NO REPRODUCTION OR DISCLOSURE OF THIS INFORMATION SHALL BE MADE BY THE RECIPIENT TO ANY OTHER PERSON OR ORGANIZATION WITHOUT THE PRIOR WRITTEN CONSENT OF HURCO COMPANIES, INC.

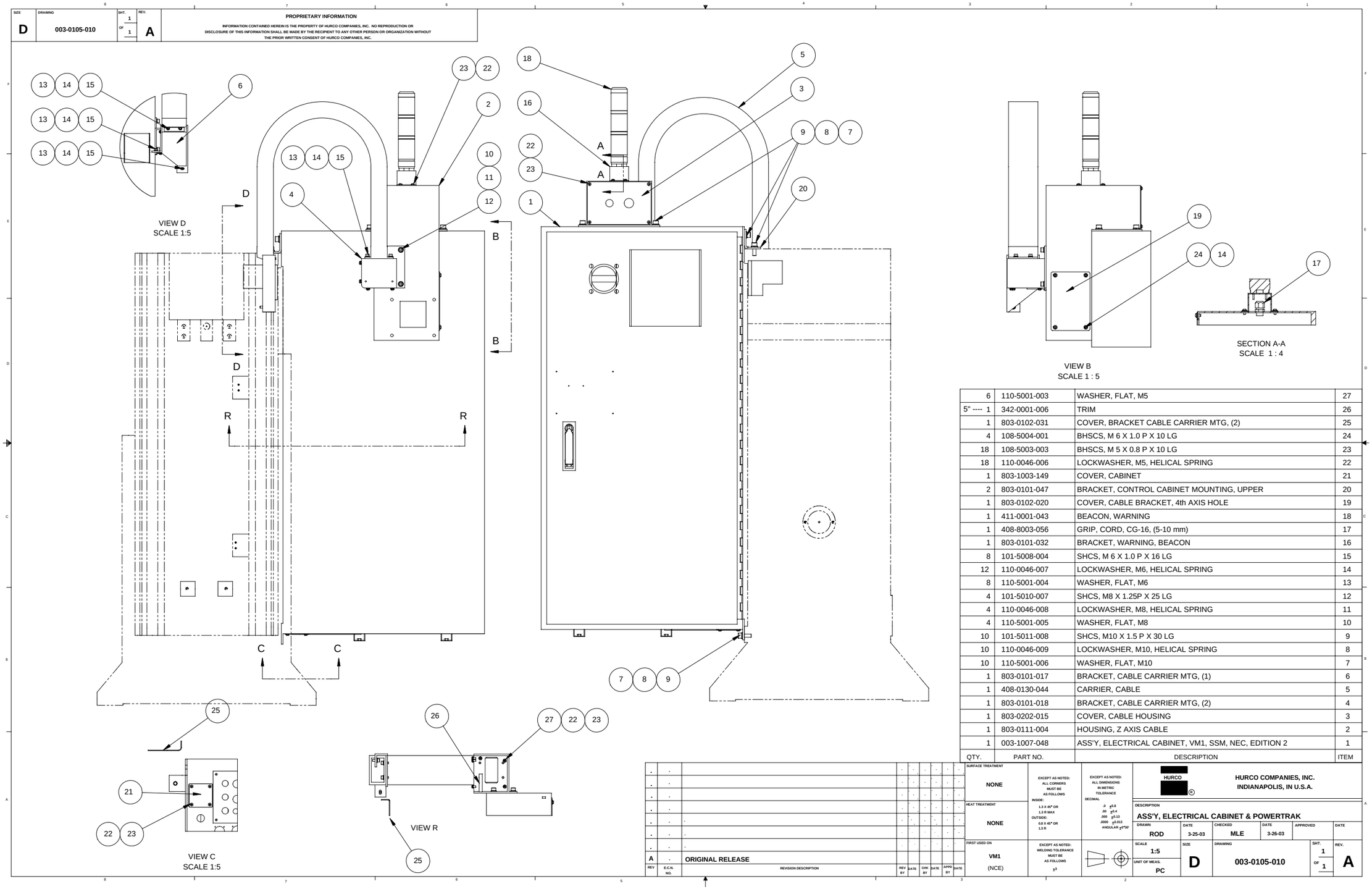


| ITEM | QTY. | PART NO. | DESCRIPTION |
|---|---|---|---|
| 27 | 6 | 110-5001-003 | WASHER, FLAT, M5 |
| 26 | 5" ---- 1 | 342-0001-006 | TRIM |
| 25 | 1 | 803-0102-031 | COVER, BRACKET CABLE CARRIER MTG, (2) |
| 24 | 4 | 108-5004-001 | BHSCS, M 6 X 1.0 P X 10 LG |
| 23 | 18 | 108-5003-003 | BHSCS, M 5 X 0.8 P X 10 LG |
| 22 | 18 | 110-0046-006 | LOCKWASHER, M5, HELICAL SPRING |
| 21 | 1 | 803-1003-149 | COVER, CABINET |
| 20 | 2 | 803-0101-047 | BRACKET, CONTROL CABINET MOUNTING, UPPER |
| 19 | 1 | 803-0102-020 | COVER, CABLE BRACKET, 4th AXIS HOLE |
| 18 | 1 | 411-0001-043 | BEACON, WARNING |
| 17 | 1 | 408-8003-056 | GRIP, CORD, CG-16, (5-10 mm) |
| 16 | 1 | 803-0101-032 | BRACKET, WARNING, BEACON |
| 15 | 8 | 101-5008-004 | SHCS, M 6 X 1.0 P X 16 LG |
| 14 | 12 | 110-0046-007 | LOCKWASHER, M6, HELICAL SPRING |
| 13 | 8 | 110-5001-004 | WASHER, FLAT, M6 |
| 12 | 4 | 101-5010-007 | SHCS, M8 X 1.25P X 25 LG |
| 11 | 4 | 110-0046-008 | LOCKWASHER, M8, HELICAL SPRING |
| 10 | 4 | 110-5001-005 | WASHER, FLAT, M8 |
| 9 | 10 | 101-5011-008 | SHCS, M10 X 1.5 P X 30 LG |
| 8 | 10 | 110-0046-009 | LOCKWASHER, M10, HELICAL SPRING |
| 7 | 10 | 110-5001-006 | WASHER, FLAT, M10 |
| 6 | 1 | 803-0101-017 | BRACKET, CABLE CARRIER MTG, (1) |
| 5 | 1 | 408-0130-044 | CARRIER, CABLE |
| 4 | 1 | 803-0101-018 | BRACKET, CABLE CARRIER MTG, (2) |
| 3 | 1 | 803-0202-015 | COVER, CABLE HOUSING |
| 2 | 1 | 803-0111-004 | HOUSING, Z AXIS CABLE |
| 1 | 1 | 003-1007-048 | ASS'Y, ELECTRICAL CABINET, VM1, SSM, NEC, EDITION 2 |

| REV | E.C.N. NO. | REVISION DESCRIPTION | REV BY | DATE | CHK BY | DATE | APPD BY | DATE |
|---|---|---|---|---|---|---|---|---|
| A | | ORIGINAL RELEASE | | | | | | |

SURFACE TREATMENT: NONE

HEAT TREATMENT: NONE

FIRST USED ON: VM1 (NCE)

EXCEPT AS NOTED: ALL CORNERS MUST BE AS FOLLOWS
INSIDE: 1.3 X 45° OR 1.3 R MAX
OUTSIDE: 0.8 X 45° OR 1.3 R

EXCEPT AS NOTED: WELDING TOLERANCE MUST BE AS FOLLOWS ±3

EXCEPT AS NOTED: ALL DIMENSIONS IN METRIC TOLERANCE
DECIMAL
.0 ±0.8
.00 ±0.4
.000 ±0.13
.0000 ±0.013
ANGULAR ±5°30'

HURCO COMPANIES, INC.
INDIANAPOLIS, IN U.S.A.

DESCRIPTION: ASS'Y, ELECTRICAL CABINET & POWERTRAK

| DRAWN | DATE | CHECKED | DATE | APPROVED | DATE |
|---|---|---|---|---|---|
| ROD | 3-25-03 | MLE | 3-26-03 | | |

SCALE: 1:5 | SIZE: D | DRAWING: 003-0105-010 | SHT. 1 OF 1 | REV. A

UNIT OF MEAS.: PC

# Ass'y., Electrical Cabinet & Powertrak, 003-0105-011—Rev. A

| SIZE | DRAWING | SHT. | REV. |
|---|---|---|---|
| D | 003-0105-011 | 1 OF 1 | A |

**PROPRIETARY INFORMATION**

INFORMATION CONTAINED HEREIN IS THE PROPERTY OF HURCO COMPANIES, INC. NO REPRODUCTION OR DISCLOSURE OF THIS INFORMATION SHALL BE MADE BY THE RECIPIENT TO ANY OTHER PERSON OR ORGANIZATION WITHOUT THE PRIOR WRITTEN CONSENT OF HURCO COMPANIES, INC.

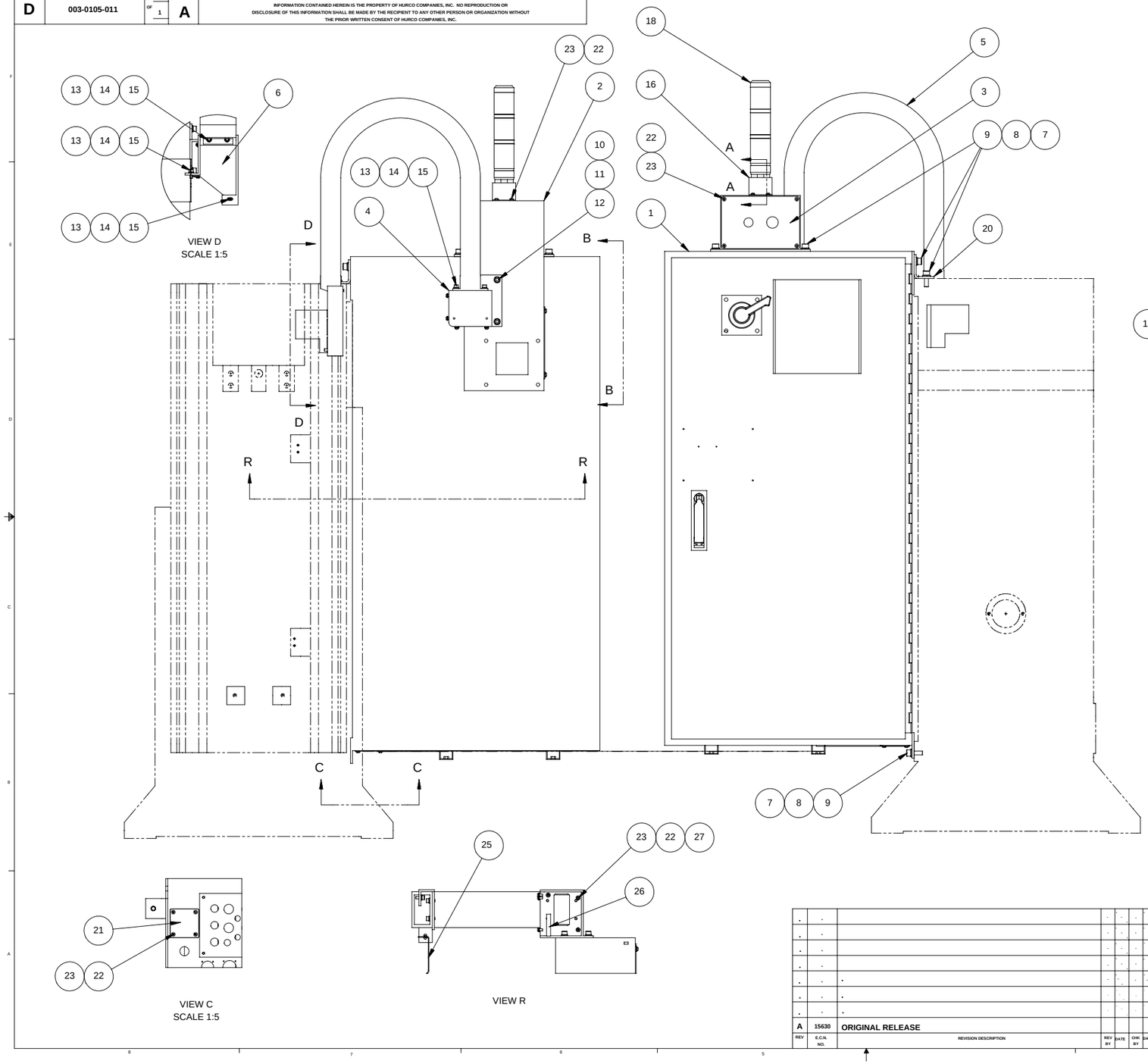


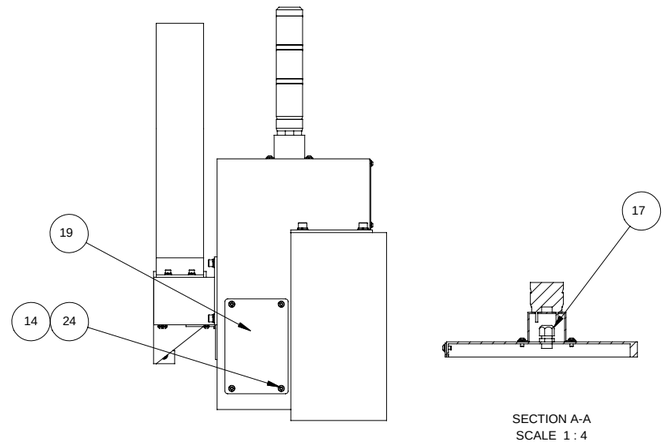


| QTY. | PART NO. | DESCRIPTION | ITEM |
|---|---|---|---|
| 6 | 110-5001-003 | WASHER, FLAT, M5 | 27 |
| 1 | 342-0001-006 | TRIM | 26 |
| 1 | 803-0102-031 | COVER, BRACKET CABLE CARRIER MTG, (2) | 25 |
| 4 | 108-5004-001 | BHSCS, M 6 X 1.0 P X 10 LG | 24 |
| 18 | 108-5003-003 | BHSCS, M 5 X 0.8 P X 10 LG | 23 |
| 18 | 110-0046-006 | LOCKWASHER, M5, HELICAL SPRING | 22 |
| 1 | 803-1003-149 | COVER, CABINET | 21 |
| 2 | 803-0101-047 | BRACKET, CONTROL CABINET MOUNTING, UPPER | 20 |
| 1 | 803-0102-020 | COVER, CABLE BRACKET, 4th AXIS HOLE | 19 |
| 1 | 411-0001-043 | BEACON, WARNING | 18 |
| 1 | 408-8003-056 | GRIP, CORD, CG-16, (5-10 mm) | 17 |
| 1 | 803-0101-032 | BRACKET, WARNING, BEACON | 16 |
| 8 | 101-5008-004 | SHCS, M 6 X 1.0 P X 16 LG | 15 |
| 12 | 110-0046-007 | LOCKWASHER, M6, HELICAL SPRING | 14 |
| 8 | 110-5001-004 | WASHER, FLAT, M6 | 13 |
| 4 | 101-5010-007 | SHCS, M8 X 1.25P X 25 LG | 12 |
| 4 | 110-0046-008 | LOCKWASHER, M8, HELICAL SPRING | 11 |
| 4 | 110-5001-005 | WASHER, FLAT, M8 | 10 |
| 10 | 101-5011-008 | SHCS, M10 X 1.5 P X 30 LG | 9 |
| 10 | 110-0046-009 | LOCKWASHER, M10, HELICAL SPRING | 8 |
| 10 | 110-5001-006 | WASHER, FLAT, M10 | 7 |
| 1 | 803-0101-017 | BRACKET, CABLE CARRIER MTG, (1) | 6 |
| 1 | 408-0130-044 | CARRIER, CABLE | 5 |
| 1 | 803-0101-018 | BRACKET, CABLE CARRIER MTG, (2) | 4 |
| 1 | 803-0202-015 | COVER, CABLE HOUSING | 3 |
| 1 | 803-0111-004 | HOUSING, Z AXIS CABLE | 2 |
| 1 | 003-1007-049 | ASS'Y, ELECTRICAL CABINET, VM1 EDIT II, W/CE | 1 |

| REV | E.C.N. NO. | REVISION DESCRIPTION | REV BY | DATE | CHK BY | DATE | APPD BY | DATE |
|---|---|---|---|---|---|---|---|---|
| A | 15630 | ORIGINAL RELEASE | | | | | | |

SURFACE TREATMENT: NONE

HEAT TREATMENT: NONE

FIRST USED ON: VM1 (CE)

EXCEPT AS NOTED: ALL CORNERS MUST BE AS FOLLOWS INSIDE: 1.3 X 45° OR 1.3 R MAX OUTSIDE: 0.8 X 45° OR 1.3 R

EXCEPT AS NOTED: WELDING TOLERANCE MUST BE AS FOLLOWS ±3

EXCEPT AS NOTED: ALL DIMENSIONS IN METRIC TOLERANCE DECIMAL .0 ±0.8 .00 ±0.4 .000 ±0.13 .0000 ±0.013 ANGULAR ±1°30'

HURCO COMPANIES, INC.
INDIANAPOLIS, IN U.S.A.

DESCRIPTION: ASS'Y, ELECTRICAL CABINET & POWERTRAK

| DRAWN | DATE | CHECKED | DATE | APPROVED | DATE |
|---|---|---|---|---|---|
| ROD | 3-26-03 | MLE | 3-27-03 | | |

SCALE 1:5 | SIZE D | DRAWING 003-0105-011 | SHT. 1 OF 1 | REV. A

UNIT OF MEAS. PC

| SIZE | DRAWING | SHT. | REV. |
|---|---|---|---|
| D | 003-0105-012 | 1 OF 1 | A |

PROPRIETARY INFORMATION

INFORMATION CONTAINED HEREIN IS THE PROPERTY OF HURCO COMPANIES, INC. NO REPRODUCTION OR DISCLOSURE OF THIS INFORMATION SHALL BE MADE BY THE RECIPIENT TO ANY OTHER PERSON OR ORGANIZATION WITHOUT THE PRIOR WRITTEN CONSENT OF HURCO COMPANIES, INC.

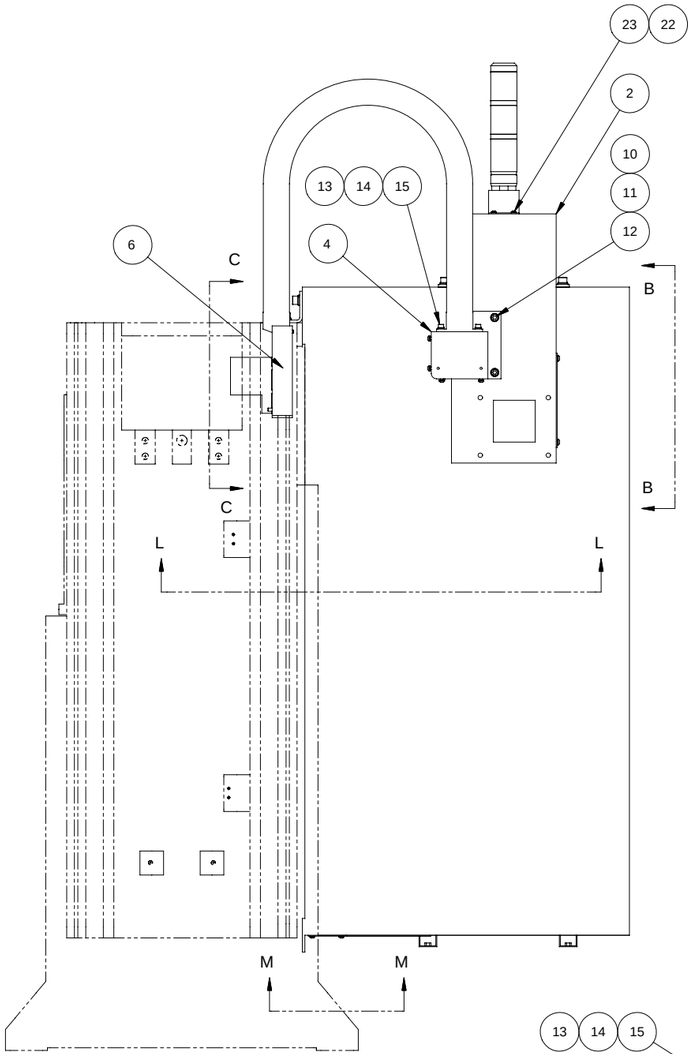


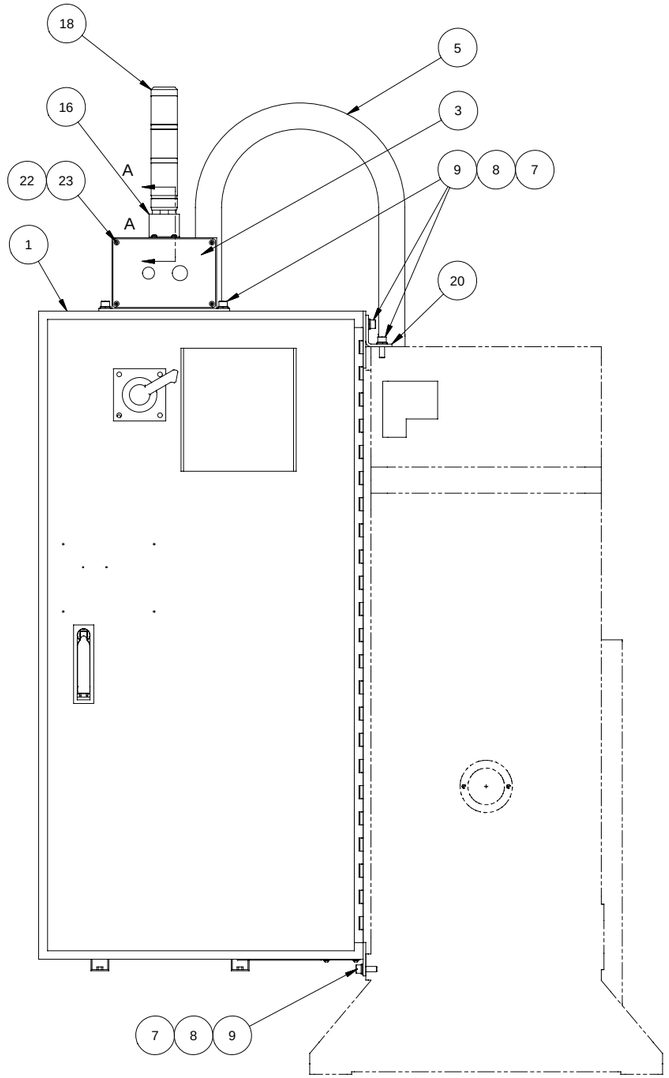


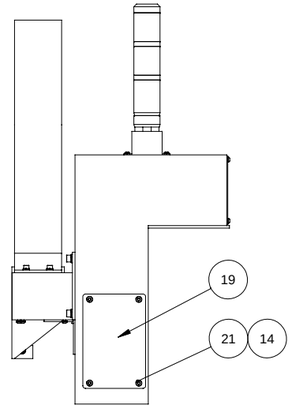


VIEW B
SCALE 1 : 5

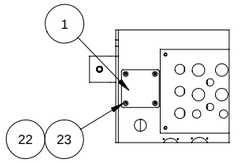


SECTION M-M
SCALE 1 : 5

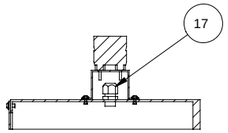


SECTION A-A
SCALE 1 : 4

| QTY. | PART NO. | DESCRIPTION | ITEM |
|---|---|---|---|
| 6 | 110-5001-003 | WASHER, FLAT, M5 | 27 |
| 1 | 342-0001-006 | TRIM | 26 |
| 1 | 803-0102-031 | COVER, BRACKET CABLE CARRIER MTG, (2) | 25 |
| 1 | 803-1003-149 | COVER, CABINET | 24 |
| 18 | 108-5003-003 | BHSCS, M 5 X 0.8 P X 10 LG | 23 |
| 18 | 110-0046-006 | LOCKWASHER, M5, HELICAL SPRING | 22 |
| 4 | 108-5004-001 | BHSCS, M 6 X 1.0 P X 10 LG | 21 |
| 2 | 803-0101-047 | BRACKET, CONTROL CABINET MOUNTING, UPPER | 20 |
| 1 | 803-0102-020 | COVER, CABLE BRACKET, 4th AXIS HOLE | 19 |
| 1 | 411-0001-043 | BEACON, WARNING | 18 |
| 1 | 408-8003-056 | GRIP, CORD, CG-16, (5-10 mm) | 17 |
| 1 | 803-0101-032 | BRACKET, WARNING, BEACON | 16 |
| 8 | 101-5008-004 | SHCS, M 6 X 1.0 P X 16 LG | 15 |
| 12 | 110-0046-007 | LOCKWASHER, M6, HELICAL SPRING | 14 |
| 8 | 110-5001-004 | WASHER, FLAT, M6 | 13 |
| 4 | 101-5010-007 | SHCS, M8 X 1.25P X 25 LG | 12 |
| 4 | 110-0046-008 | LOCKWASHER, M8, HELICAL SPRING | 11 |
| 4 | 110-5001-005 | WASHER, FLAT, M8 | 10 |
| 10 | 101-5011-008 | SHCS, M10 X 1.5 P X 30 LG | 9 |
| 10 | 110-0046-009 | LOCKWASHER, M10, HELICAL SPRING | 8 |
| 10 | 110-5001-006 | WASHER, FLAT, M10 | 7 |
| 1 | 803-0101-017 | BRACKET, CABLE CARRIER MTG, (1) | 6 |
| 1 | 408-0130-044 | CARRIER, CABLE | 5 |
| 1 | 803-0101-018 | BRACKET, CABLE CARRIER MTG, (2) | 4 |
| 1 | 803-0202-015 | COVER, CABLE HOUSING | 3 |
| 1 | 803-0111-004 | HOUSING, Z AXIS CABLE | 2 |
| 1 | 003-1007-050 | ASS'Y, ELECTRICAL CABINET, VM1 EDIT II, DSM | 1 |

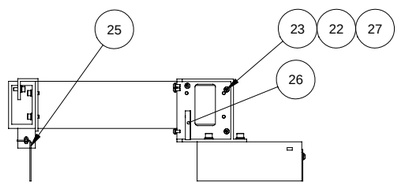


VIEW L

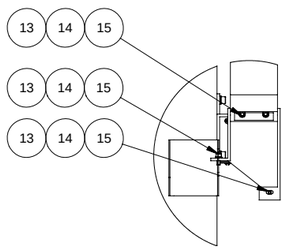


VIEW C
SCALE 1:5

| REV | E.C.N. NO. | REVISION DESCRIPTION | REV BY | DATE | CHK BY | DATE | APPD BY | DATE |
|---|---|---|---|---|---|---|---|---|
| A | 15630 | ORIGINAL RELEASE | | | | | | |

SURFACE TREATMENT: NONE

HEAT TREATMENT: NONE

FIRST USED ON: VM1 (DSM)

EXCEPT AS NOTED: ALL CORNERS MUST BE AS FOLLOWS
INSIDE: 1.3 X 45° OR 1.9 R MAX
OUTSIDE: 0.8 X 45° OR 1.3 R

EXCEPT AS NOTED: ALL DIMENSIONS IN METRIC TOLERANCE
DECIMAL: .0 ±0.8; .00 ±0.4; .000 ±0.13; .0000 ±0.013; ANGULAR ±0°30'

EXCEPT AS NOTED: WELDING TOLERANCE MUST BE AS FOLLOWS
±3

HURCO COMPANIES, INC.
INDIANAPOLIS, IN U.S.A.

DESCRIPTION: ASS'Y, ELECTRICAL CABINET & POWERTRAK

| DRAWN | DATE | CHECKED | DATE | APPROVED | DATE |
|---|---|---|---|---|---|
| ROD | 3-27-03 | MLE | 3-28-03 | | |

SCALE 1:10 | SIZE D | DRAWING 003-0105-012 | SHT. 1 OF 1 | REV. A

UNIT OF MEAS. PC

# Ass'y., Electrical Cabinet & Powertrak, 003-0105-014—Rev. A

| SIZE | DRAWING | SHT. | REV. |
|---|---|---|---|
| D | 003-0105-014 | 1 OF 1 | A |

PROPRIETARY INFORMATION

INFORMATION CONTAINED HEREIN IS THE PROPERTY OF HURCO COMPANIES, INC. NO REPRODUCTION OR DISCLOSURE OF THIS INFORMATION SHALL BE MADE BY THE RECIPIENT TO ANY OTHER PERSON OR ORGANIZATION WITHOUT THE PRIOR WRITTEN CONSENT OF HURCO COMPANIES, INC.

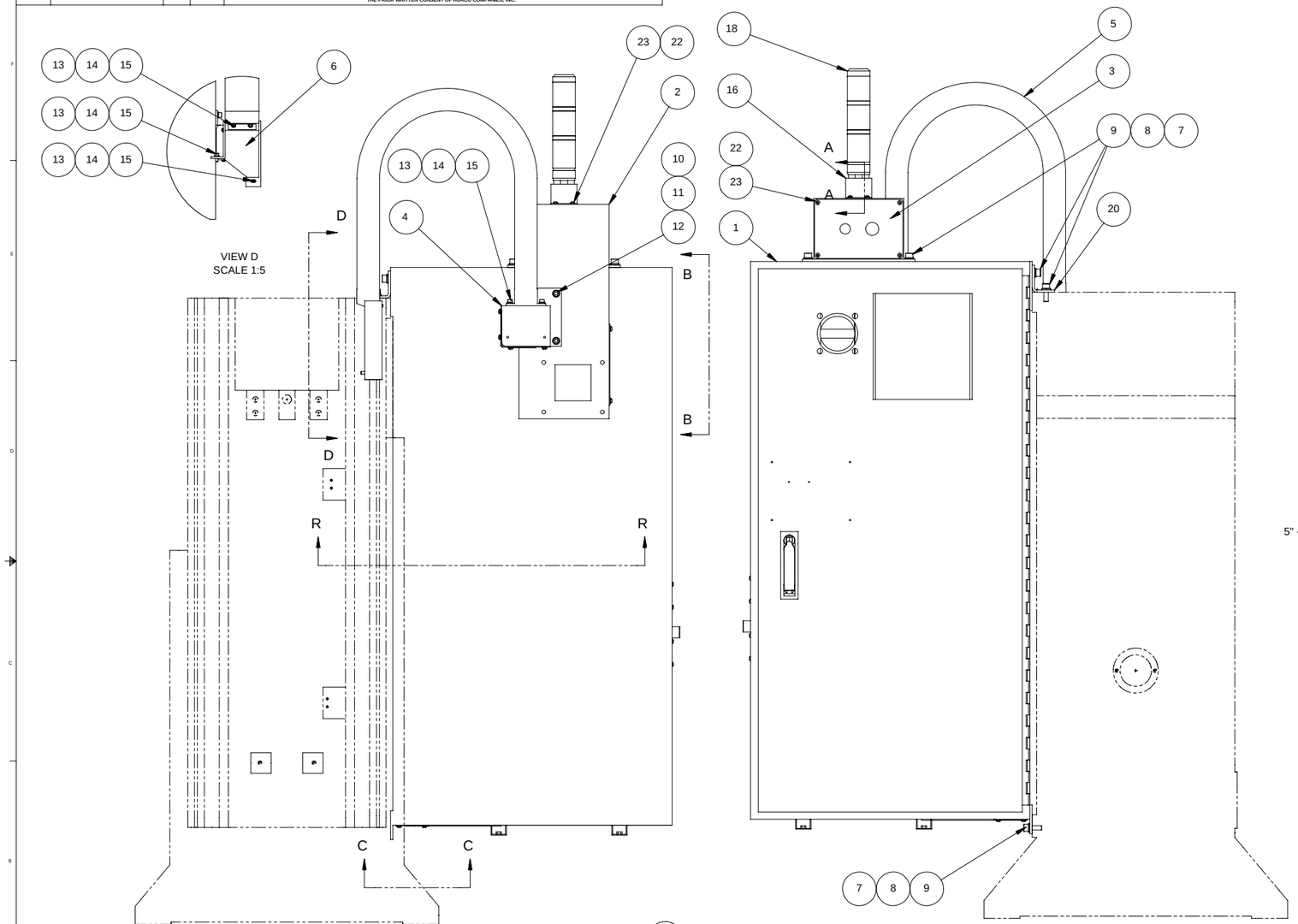


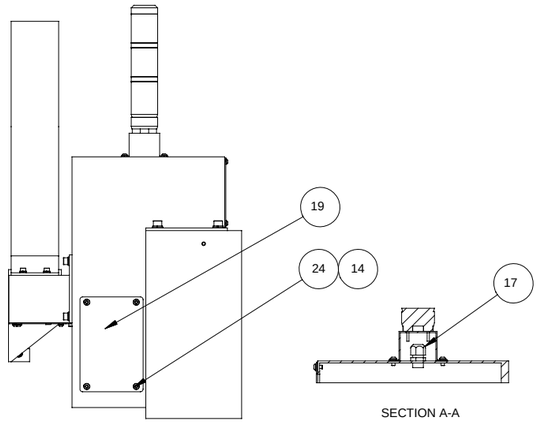


| QTY. | PART NO. | DESCRIPTION | ITEM |
|---|---|---|---|
| 1 | 803-0102-031 | COVER, BRACKET CABLE CARRIER MTG, (2) | 27 |
| 6 | 110-5001-003 | WASHER, FLAT, M5 | 26 |
| 1 | 342-0001-006 | TRIM | 25 |
| 4 | 108-5004-001 | BHSCS, M 6 X 1.0 P X 10 LG | 24 |
| 18 | 108-5003-003 | BHSCS, M 5 X 0.8 P X 10 LG | 23 |
| 18 | 110-0046-006 | LOCKWASHER, M5, HELICAL SPRING | 22 |
| 1 | 803-1003-149 | COVER, CABINET | 21 |
| 2 | 803-0101-047 | BRACKET, CONTROL CABINET MOUNTING, UPPER | 20 |
| 1 | 803-0102-020 | COVER, CABLE BRACKET, 4th AXIS HOLE | 19 |
| 1 | 411-0001-043 | BEACON, WARNING | 18 |
| 1 | 408-8003-056 | GRIP, CORD, CG-16, (5-10 mm) | 17 |
| 1 | 803-0101-032 | BRACKET, WARNING, BEACON | 16 |
| 8 | 101-5008-004 | SHCS, M 6 X 1.0 P X 16 LG | 15 |
| 12 | 110-0046-007 | LOCKWASHER, M6, HELICAL SPRING | 14 |
| 8 | 110-5001-004 | WASHER, FLAT, M6 | 13 |
| 4 | 101-5010-007 | SHCS, M8 X 1.25P X 25 LG | 12 |
| 4 | 110-0046-008 | LOCKWASHER, M8, HELICAL SPRING | 11 |
| 4 | 110-5001-005 | WASHER, FLAT, M8 | 10 |
| 10 | 101-5011-008 | SHCS, M10 X 1.5 P X 30 LG | 9 |
| 10 | 110-0046-009 | LOCKWASHER, M10, HELICAL SPRING | 8 |
| 10 | 110-5001-006 | WASHER, FLAT, M10 | 7 |
| 1 | 803-0101-017 | BRACKET, CABLE CARRIER MTG, (1) | 6 |
| 1 | 408-0130-044 | CARRIER, CABLE | 5 |
| 1 | 803-0101-018 | BRACKET, CABLE CARRIER MTG, (2) | 4 |
| 1 | 803-0202-015 | COVER, CABLE HOUSING | 3 |
| 1 | 803-0111-004 | HOUSING, Z AXIS CABLE | 2 |
| 1 | 003-1007-059 | ASS'Y, ELECTRICAL CABINET | 1 |

| REV | E.C.N. NO. | REVISION DESCRIPTION | REV BY | DATE | CHK BY | DATE | APPD BY | DATE |
|---|---|---|---|---|---|---|---|---|
| A | 15741 | ORIGINAL RELEASE | | | | | | |

SURFACE TREATMENT: NONE
HEAT TREATMENT: NONE
FIRST USED ON: VMX1 (NCE)

EXCEPT AS NOTED: ALL CORNERS MUST BE AS FOLLOWS
INSIDE: 1.3 X 45° OR 1.3 R MAX
OUTSIDE: 0.8 X 45° OR 1.3 R

EXCEPT AS NOTED: ALL DIMENSIONS IN METRIC TOLERANCE
DECIMAL: .0 ±0.8; .00 ±0.4; .000 ±0.13; .0000 ±0.013; ANGULAR ±0°30'

EXCEPT AS NOTED: WELDING TOLERANCE MUST BE AS FOLLOWS ±3

HURCO COMPANIES, INC.
INDIANAPOLIS, IN U.S.A.

DESCRIPTION: ASS'Y, ELECTRICAL CABINET & POWERTRAK

| DRAWN | DATE | CHECKED | DATE | APPROVED | DATE |
|---|---|---|---|---|---|
| ROD | 8-18-03 | MLE | 8-19-03 | | |

SCALE: 1:5 | UNIT OF MEAS.: PC | SIZE: D | DRAWING: 003-0105-014 | SHT. 1 OF 1 | REV. A

| SIZE | DRAWING | SHT. | REV. |
|---|---|---|---|
| D | 003-0106-001 | 1 OF 1 | A |

**PROPRIETARY INFORMATION**

INFORMATION CONTAINED HEREIN IS THE PROPERTY OF HURCO COMPANIES, INC. NO REPRODUCTION OR DISCLOSURE OF THIS INFORMATION SHALL BE MADE BY THE RECIPIENT TO ANY OTHER PERSON OR ORGANIZATION WITHOUT THE PRIOR WRITTEN CONSENT OF HURCO COMPANIES, INC.

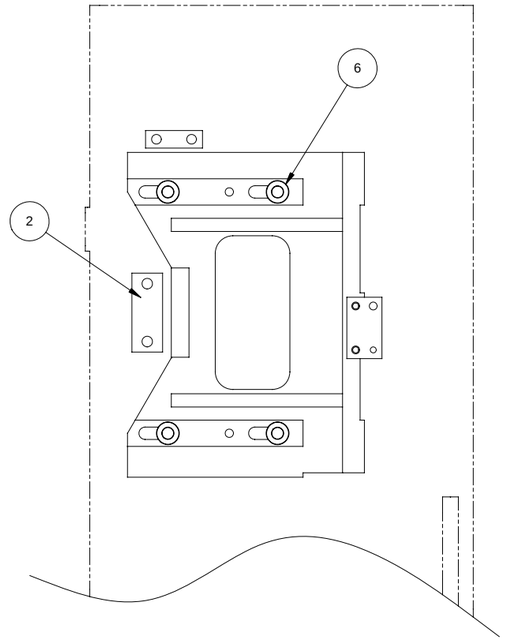


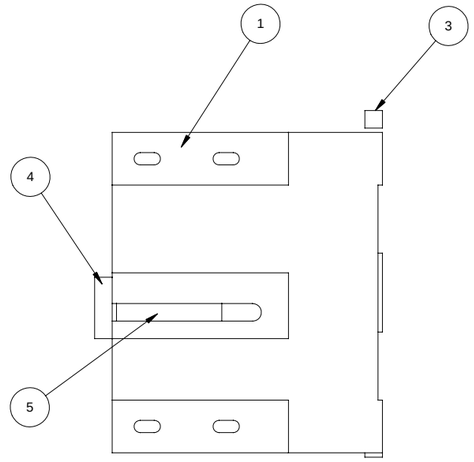


| QTY. | PART NO. | DESCRIPTION | ITEM |
|---|---|---|---|
| 4 | 803-1013-007 | WASHER, FLAT, M12 | 6 |
| 1 | 803-1023-007 | KEY, MOUNTING, ARM, ATC | 5 |
| 1 | 803-1002-183 | BRKT, ADJUSTMENT, ATC, UPPER | 4 |
| 1 | 803-1002-184 | BRKT, ADJUSTMENT, ATC | 3 |
| 1 | 803-1002-126 | BRKT, ADJUSTMENT, ATC, LOWER | 2 |
| 1 | 803-0101-005 | BRACKET, MOUNTING, ATC | 1 |

| REV | E.C.N. NO. | REVISION DESCRIPTION | REV BY | DATE | CHK BY | DATE | APPD BY | DATE |
|---|---|---|---|---|---|---|---|---|
| A | 15484 | ORIGINAL RELEASE | | | | | | |

SURFACE TREATMENT: NONE

HEAT TREATMENT: NONE

FIRST USED ON: VM1

EXCEPT AS NOTED: ALL CORNERS MUST BE AS FOLLOWS
INSIDE: 1.3 X 45° OR 1.3 R MAX
OUTSIDE: 0.8 X 45° OR 1.3 R

EXCEPT AS NOTED: WELDING TOLERANCE MUST BE AS FOLLOWS
±3

EXCEPT AS NOTED: ALL DIMENSIONS IN METRIC TOLERANCE
DECIMAL
.0 ±0.8
.00 ±0.4
.000 ±0.13
.0000 ±0.013
ANGULAR ±1°30'

HURCO COMPANIES, INC.
INDIANAPOLIS, IN U.S.A.

DESCRIPTION: ASS'Y, MOUNTING, ATC, VM1

| DRAWN | DATE | CHECKED | DATE | APPROVED | DATE |
|---|---|---|---|---|---|
| KEVIN | 04-25-02 | MLE | 04-30-02 | JLW | 09-19-02 |

SCALE: 1:3
UNIT OF MEAS.: PC
SIZE: D
DRAWING: 003-0106-001
SHT. 1 OF 1
REV. A

| SIZE | DRAWING | SHT. | REV. |
|---|---|---|---|
| D | 003-0106-002EX | 1 OF 1 | C |

PROPRIETARY INFORMATION

INFORMATION CONTAINED HEREIN IS THE PROPERTY OF HURCO COMPANIES, INC. NO REPRODUCTION OR DISCLOSURE OF THIS INFORMATION SHALL BE MADE BY THE RECIPIENT TO ANY OTHER PERSON OR ORGANIZATION WITHOUT THE PRIOR WRITTEN CONSENT OF HURCO COMPANIES, INC.

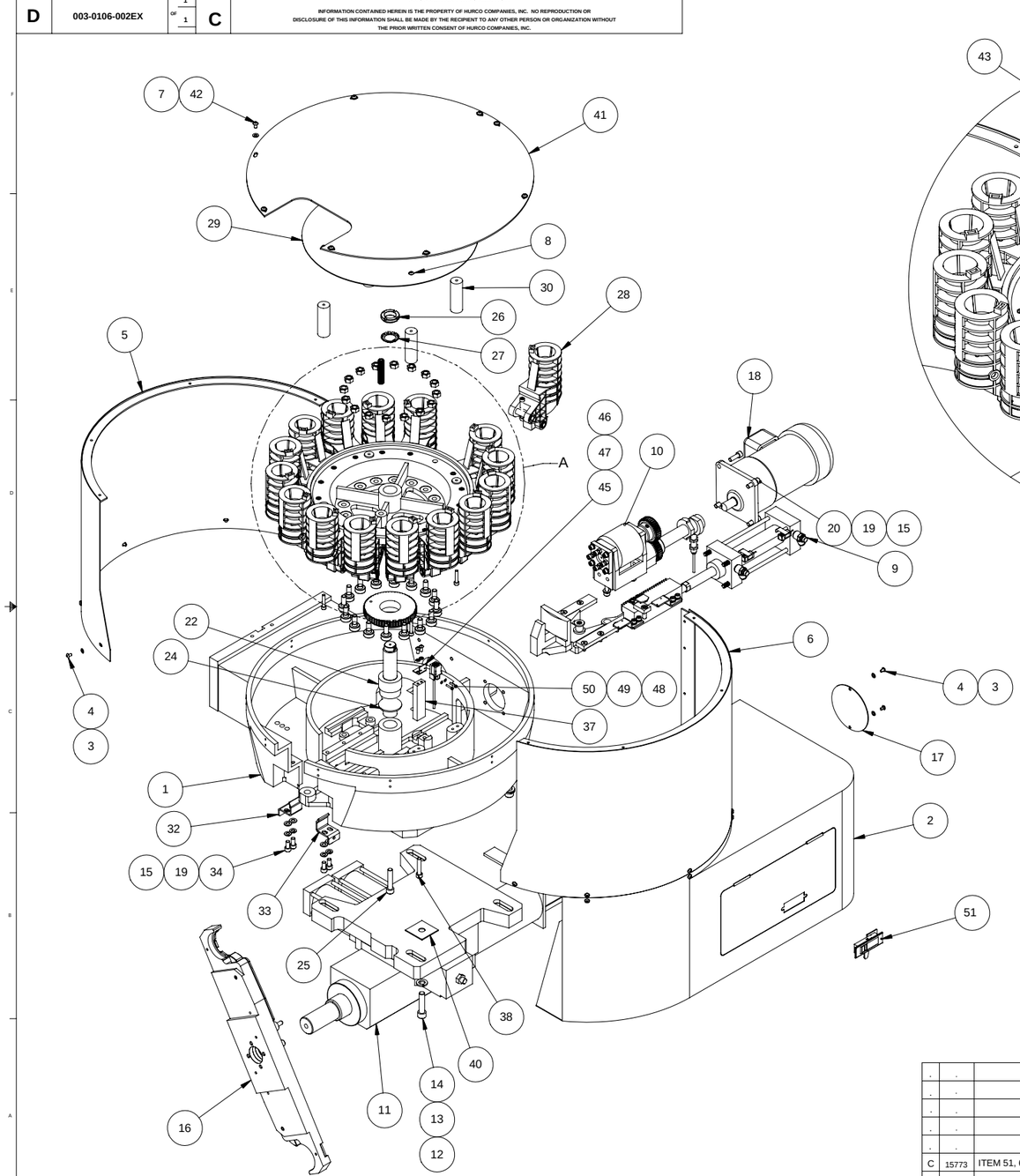


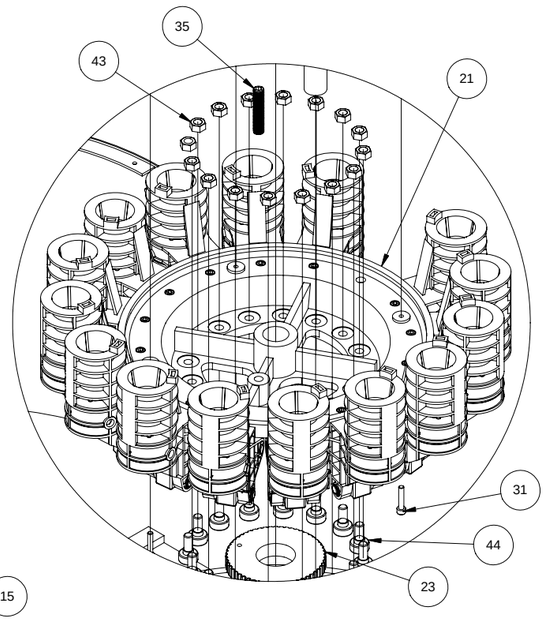


DETAIL A
SCALE 1 : 3

| | QTY. | PART NO. | DESCRIPTION | ITEM |
|---|---|---|---|---|
| C | 1 | 603-0003-003 | HANDLE, PLUSH, RIGHT | 51 |
| B3 | 2 | 101-5006-006 | SHCS, M 3 X 0.5 P X 16 LG | 50 |
| B3 | 2 | 110-0046-003 | LOCKWASHER, M3, HELICAL SPRING | 49 |
| B3 | 1 | 418-5002-022 | INDUCTIVE PROXIMITY SENSOR | 48 |
| B3 | 2 | 108-5003-004 | BHCS, M 5 X 0.8 P X 12 LG | 47 |
| B3 | 2 | 110-0046-006 | LOCKWASHER, M5, HELICAL SPRING | 46 |
| B3 | 1 | 803-0101-053 | BRACKET, PROXIMITY SWITCH | 45 |
| | 16 | 604-3403-001 | BEARING, CAM FOLLOWER | 44 |
| | 16 | 117-5016-001 | NUT, HEX M10 X 1.5 P | 43 |
| | 8 | 108-5004-001 | BHSCS, M 6 X 1.0 P X 10 LG | 42 |
| | 1 | 803-0102-033 | COVER, FRONT, ATC | 41 |
| | 4 | 803-0108-024 | PLATE, ATC | 40 |
| B2 | 0 | 101-5006-004 | SHCS, M 3 X 0.5 P X 12 LG | 39 |
| | 1 | 101-5010-010 | SHCS, M8 X 1.25P X 40 LG | 38 |
| | 1 | 803-0108-023 | BAR, SENSOR | 37 |
| B1 | 0 | 803-0101-050 | BRACKET, PROX. SWITCH | 36 |
| | 1 | 803-0106-028 | SCREW, SET | 35 |
| | 4 | 101-5010-003 | SHCS, M 8 X 1.25 P X 16 LG | 34 |
| | 1 | 803-0101-048 | BRACKET, TOOL GUIDE, LH | 33 |
| | 1 | 803-0101-049 | BRACKET, TOOL GUIDE, RH | 32 |
| | 4 | 101-5008-009 | SHCS, M 6 X 1.0 P X 30 LG | 31 |
| | 4 | 803-0106-026 | SPACER, ATC COVER | 30 |
| | 1 | 803-0108-019 | COVER, FRONT ATC | 29 |
| | 16 | 003-0106-008 | ASS'Y, TOOL HOLDER | 28 |
| | 1 | 211-0088-031 | WASHER, LOCKNUT AW-05 | 27 |
| | 1 | 211-0087-063 | LOCKNUT, BEARING AN-05 | 26 |
| | 1 | 101-5011-012 | SHCS, M10 X 1.5 P X 50 LG | 25 |
| | 1 | 803-0106-027 | WASHER, TOOL DISK | 24 |
| | 1 | 803-0108-022 | GEAR, DRIVE, ATC | 23 |
| | 1 | 803-0108-021 | SHAFT, TOOL DISK | 22 |
| | 1 | 803-0108-020 | TOOL DISK, ATC | 21 |
| | 4 | 101-5010-007 | SHCS, M8 X 1.25P X 25 LG | 20 |
| | 8 | 110-0046-008 | LOCKWASHER, M8, HELICAL SPRING | 19 |
| | 1 | 401-3002-009 | GEAR MOTOR, I/4HP, 220V, 1:20 | 18 |
| | 1 | 803-0108-018 | COVER, TOP ATC | 17 |
| | 1 | 003-0106-003 | ASS'Y, CAT SWING ARM | 16 |
| | 8 | 110-5001-005 | WASHER, FLAT, M8 | 15 |
| | 4 | 101-5012-007 | SHCS, M12 X 1.75 P X 50 LG | 14 |
| | 4 | 110-0046-010 | LOCKWASHER, M12, HELICAL SPRING | 13 |
| | 4 | 110-5001-007 | WASHER, FLAT, M12 | 12 |
| | 1 | 003-1004-022 | ASS'Y, MECHANICAL HOUSING | 11 |
| | 1 | 003-0106-010 | ASS'Y, ATC DRIVE | 10 |
| | 1 | 003-0106-009 | ASS'Y, TOOL HOLDER UP/DOWN | 9 |
| | 8 | 108-5004-002 | BHSCS, M 6 X 1.0 P X 12 LG | 8 |
| | 12 | 110-5001-004 | WASHER, FLAT, M6 | 7 |
| | 1 | 803-0108-017 | COVER, ATC MAGAZINE, LH | 6 |
| | 1 | 803-0108-016 | COVER, ATC MAGAZINE, RH | 5 |
| | 15 | 108-5003-002 | BHSCS, M 5 X 0.8 P X 8 LG | 4 |
| | 15 | 110-5001-003 | WASHER, FLAT, M5 | 3 |
| | 1 | 803-0102-028 | COVER, ATC | 2 |
| | 1 | 803-0108-009 | CASTING, ATC BODY | 1 |

| REV | E.C.N. NO. | REVISION DESCRIPTION | REV BY | DATE | CHK BY | DATE | APPD BY | DATE |
|---|---|---|---|---|---|---|---|---|
| C | 15773 | ITEM 51, 603-0003-003 ADDED | JLW | 09/15/2004 | SMA | 09/15/2004 | PFB | 09/15/2004 |
| B | 15540 | (1)QTY WAS 2, (2)QTY WAS 2, (3)ADDED ITEMS 45 THRU 50 | ROD | 6/03 | PFB | 6/03 | | |
| A | 15531 | ORIGINAL RELEASE | | | | | | |

SURFACE TREATMENT: NONE

HEAT TREATMENT: NONE

FIRST USED ON: VM1

EXCEPT AS NOTED: ALL CORNERS MUST BE AS FOLLOWS
INSIDE: 1.3 X 45° OR 1.3 R MAX
OUTSIDE: 0.8 X 45° OR 1.3 R

EXCEPT AS NOTED: WELDING TOLERANCE MUST BE AS FOLLOWS ±3°

EXCEPT AS NOTED: ALL DIMENSIONS IN METRIC TOLERANCE
DECIMAL
.0 ±0.8
.00 ±0.4
.000 ±0.33
.0000 ±0.013
ANGULAR ±0°30'

HURCO COMPANIES, INC.
INDIANAPOLIS, IN U.S.A.

DESCRIPTION: ASS'Y, CAT ATC 16T

| DRAWN | DATE | CHECKED | DATE | APPROVED | DATE |
|---|---|---|---|---|---|
| GLH | 12/12/2002 | PFB | 12/12/2002 | | |

SCALE 1:5 | UNIT OF MEASURE: PC | SIZE: D | DRAWING: 003-0106-002EX | SHT. 1 OF 1 | REV. C

| SIZE | DRAWING | SHT. | REV. |
|---|---|---|---|
| D | 003-0106-003EX | 1 OF 1 | B |

PROPRIETARY INFORMATION

INFORMATION CONTAINED HEREIN IS THE PROPERTY OF HURCO COMPANIES, INC. NO REPRODUCTION OR DISCLOSURE OF THIS INFORMATION SHALL BE MADE BY THE RECIPIENT TO ANY OTHER PERSON OR ORGANIZATION WITHOUT THE PRIOR WRITTEN CONSENT OF HURCO COMPANIES, INC.

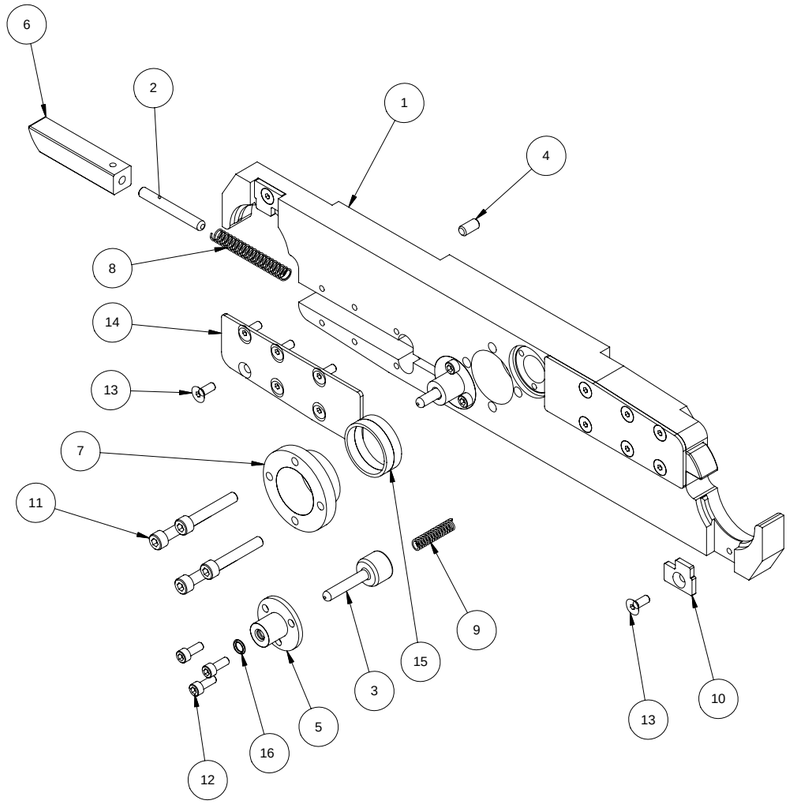


| | QTY. | PART NO. | DESCRIPTION | ITEM |
|---|---|---|---|---|
| B | 2 | 608-2003-071 | O-RING, 8X11X1.9 | 16 |
| | 2 | 219-0001-048 | RING, RETAINING | 15 |
| | 2 | 803-0108-006 | COVER, PLATE, FINGER | 14 |
| | 14 | 102-5004-005 | FHSCS, M 6 X 1.0 P X 16 LG | 13 |
| | 6 | 101-5008-004 | SHCS, M 6 X 1.0 P X 16 LG | 12 |
| | 4 | 101-5010-012 | SHCS, M 8 X 1.25 P X 50 LG | 11 |
| | 2 | 803-0108-005 | KEY | 10 |
| | 2 | 803-1012-028 | SPRING, ARM PIN | 9 |
| | 2 | 803-1012-027 | SPRING, ARM, FINGER | 8 |
| | 1 | 803-1003-078 | COVER | 7 |
| | 2 | 803-0108-008 | FINGER | 6 |
| | 2 | 803-0108-015 | BUSHING, PIN, ATC | 5 |
| | 2 | 803-1022-007 | PIN, 8.0 DIA X 16 LG | 4 |
| | 2 | 803-0108-002 | PIN, STOP (CAT) | 3 |
| | 2 | 803-0108-004 | PIN, SLIDE BLOCK | 2 |
| | 1 | 803-0108-001 | ARM, SWING, CAT | 1 |

| REV | E.C.N. NO. | REVISION DESCRIPTION | REV BY | DATE | CHK BY | DATE | APPD BY | DATE |
|---|---|---|---|---|---|---|---|---|
| B | 15769 | ITEM 16 ADDED | JLW | 09/03 2004 | PFB | 09/03 2004 | PFB | 09/03 2004 |
| A | 15531 | ORIGINAL RELEASE | | | | | | |

SURFACE TREATMENT: NONE

HEAT TREATMENT: NONE

FIRST USED ON: VM1

EXCEPT AS NOTED: ALL CORNERS MUST BE AS FOLLOWS
INSIDE: 1.3 X 45° OR 1.3 R MAX
OUTSIDE: 0.8 X 45° OR 1.3 R

EXCEPT AS NOTED: ALL DIMENSIONS IN METRIC TOLERANCE
DECIMAL: .0 ±0.8, .00 ±0.4, .000 ±0.13, .0000 ±0.013
ANGULAR ±0°30'

EXCEPT AS NOTED: WELDING TOLERANCE MUST BE AS FOLLOWS
±3

HURCO COMPANIES, INC.
INDIANAPOLIS, IN U.S.A.

DESCRIPTION: ASS'Y, CAT SWING ARM

| DRAWN | DATE | CHECKED | DATE | APPROVED | DATE |
|---|---|---|---|---|---|
| GLH | 11/11/02 | ML | 11/11/02 | PFB | 11/11/02 |

| SCALE | SIZE | DRAWING | SHT. | REV. |
|---|---|---|---|---|
| 1:5 | D | 003-0106-003EX | 1 OF 1 | B |

UNIT OF MEAS.: PC

# Ass'y., BT ATC 16T, 003-0106-005—Rev. C

| SIZE | DRAWING | SHT. | REV. |
|---|---|---|---|
| D | 003-0106-005 | 1 OF 3 | C |

PROPRIETARY INFORMATION

INFORMATION CONTAINED HEREIN IS THE PROPERTY OF HURCO COMPANIES, INC. NO REPRODUCTION OR DISCLOSURE OF THIS INFORMATION SHALL BE MADE BY THE RECIPIENT TO ANY OTHER PERSON OR ORGANIZATION WITHOUT THE PRIOR WRITTEN CONSENT OF HURCO COMPANIES, INC.

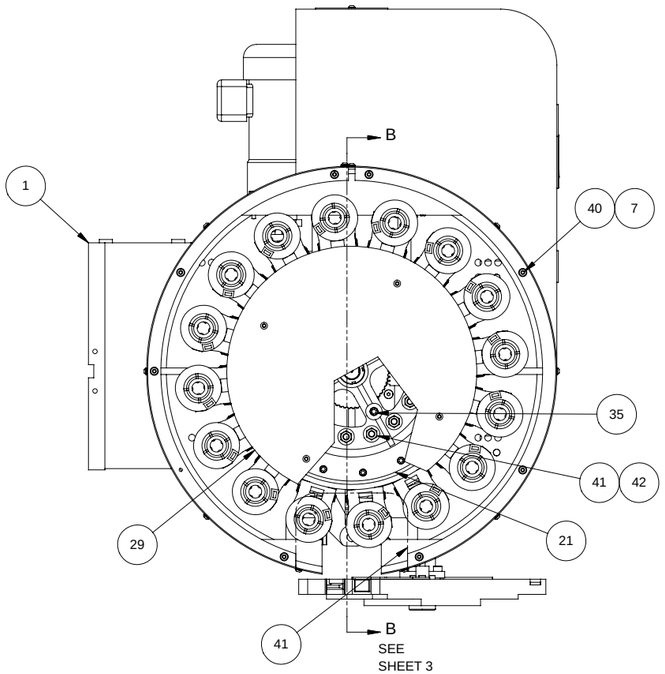


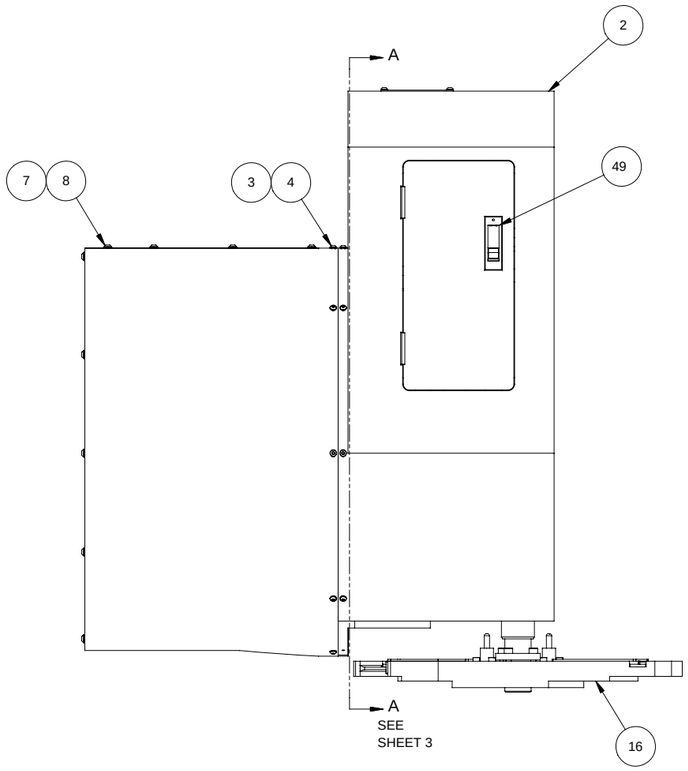


| ITEM | QTY. | PART NO. | DESCRIPTION |
|---|---|---|---|
| C | 1 | 603-0003-003 | HANDLE, PLUSH, RIGHT |
| B8 | 2 | 101-5006-006 | SHCS, M 3 X 0.5 P X 16 LG |
| B7 | 2 | 110-0046-003 | LOCKWASHER, M3, HELICAL SPRING |
| B6 | 2 | 108-5003-004 | BHCS, M 5 X 0.8 P X 12 LG |
| B5 | 2 | 110-0046-006 | LOCKWASHER, M5, HELICAL SPRING |
| B4 | 1 | 418-5002-022 | INDUCTIVE PROXIMITY SENSOR |
| B3 | 1 | 803-0101-053 | BRACKET, PROX. SWITCH |
| | 16 | 604-3403-001 | BEARING, CAM FOLLOWER |
| | 16 | 117-5016-001 | NUT, HEX M10 X 1.5 P |
| | 8 | 108-5004-001 | BHSCS, M 6 X 1.0 P X 10 LG |
| B2 | 1 | 803-0102-033 | COVER, FRONT, ATC |
| | 4 | 803-0108-024 | PLATE, ATC |
| | 1 | 101-5010-010 | SHCS, M8 X 1.25P X 40 LG |
| B1 | 1 | 803-0108-023 | BAR, SENSOR |
| | 1 | 803-0106-028 | SCREW, SET |
| | 4 | 101-5010-003 | SHCS, M 8 X 1.25 P X 16 LG |
| | 1 | 803-0101-048 | BRACKET, TOOL GUIDE, LH |
| | 1 | 803-0101-049 | BRACKET, TOOL GUIDE, RH |
| | 4 | 101-5008-009 | SHCS, M 6 X 1.0 P X 30 LG |
| | 4 | 803-0106-026 | SPACER, ATC COVER |
| | 1 | 803-0108-019 | COVER, FRONT ATC |
| | 16 | 003-0106-008 | ASS'Y, TOOL HOLDER |
| | 1 | 211-0088-031 | WASHER, LOCKNUT AW-05 |
| | 1 | 211-0087-063 | LOCKNUT, BEARING AN-05 |
| | 1 | 101-5011-012 | SHCS, M10 X 1.5 P X 50 LG |
| | 1 | 803-0106-027 | WASHER, TOOL DISK |
| | 1 | 803-0108-022 | GEAR, DRIVE, ATC |
| | 1 | 803-0108-021 | SHAFT, TOOL DISK |
| | 1 | 803-0108-020 | TOOL DISK, ATC |
| | 4 | 101-5010-007 | SHCS, M8 X 1.25P X 25 LG |
| | 8 | 110-0046-008 | LOCKWASHER, M8, HELICAL SPRING |
| | 1 | 401-3002-009 | GEAR MOTOR, I/4HP, 220V, 1:20 |
| | 1 | 803-0108-018 | COVER, TOP ATC |
| | 1 | 003-0106-006 | ASS'Y, BT SWING ARM |
| | 8 | 110-5001-005 | WASHER, FLAT, M8 |
| | 4 | 101-5012-007 | SHCS, M12 X 1.75 P X 50 LG |
| | 4 | 110-0046-010 | LOCKWASHER, M12, HELICAL SPRING |
| | 4 | 110-5001-007 | WASHER, FLAT, M12 |
| | 1 | 003-1004-022 | ASS'Y, MECHANICAL HOUSING |
| | 1 | 003-0106-010 | ASS'Y, ATC DRIVE |
| | 1 | 003-0106-009 | ASS'Y, TOOL HOLDER UP/DOWN |
| | 8 | 108-5004-002 | BHSCS, M 6 X 1.0 P X 12 LG |
| | 12 | 110-5001-004 | WASHER, FLAT, M6 |
| | 1 | 803-0108-017 | COVER, ATC MAGAZINE, LH |
| | 1 | 803-0108-016 | COVER, ATC MAGAZINE, RH |
| | 15 | 108-5003-002 | BHSCS, M 5 X 0.8 P X 8 LG |
| | 15 | 110-5001-003 | WASHER, FLAT, M5 |
| | 1 | 803-0102-028 | COVER, ATC |
| | 1 | 803-0108-009 | CASTING, ATC BODY |

| REV | E.C.N. NO. | REVISION DESCRIPTION | REV BY | DATE | CHK BY | DATE | APPD BY | DATE |
|---|---|---|---|---|---|---|---|---|
| C | 15773 | P/N 603-0003-003 ADDED | JLW | 09/15/2004 | SMc | 09/15/2004 | PFB | 09/15/2004 |
| B | 15540 | 3 THRU 8) ITEM ADDED;<br>1) WAS 803-0101-050 QTY 1 CHANGE TO ITEM 43; 2) WAS 101-5006-004 QTY2; | ROD | 06/18/2003 | PFB | 06-30-2003 | - | - |
| A | 15531 | ORIGINAL RELEASE | | | | | | |

SURFACE TREATMENT: NONE

HEAT TREATMENT: NONE

FIRST USED ON: VM1

EXCEPT AS NOTED: ALL CORNERS MUST BE AS FOLLOWS
INSIDE: 1.3 X 45° OR 1.3 R MAX
OUTSIDE: 0.8 X 45° OR 1.3 R

EXCEPT AS NOTED: WELDING TOLERANCE MUST BE AS FOLLOWS ±3

EXCEPT AS NOTED: ALL DIMENSIONS IN METRIC TOLERANCE
DECIMAL .0 ±0.8; .00 ±0.4; .000 ±0.13; .0000 ±0.013; ANGULAR ±0°30'

HURCO COMPANIES, INC.
INDIANAPOLIS, IN U.S.A.

DESCRIPTION: ASS'Y, BT ATC 16T

| DRAWN | DATE | CHECKED | DATE | APPROVED | DATE |
|---|---|---|---|---|---|
| GLH | 12/12/02 | PFB | 12/12/02 | | |

| SCALE | SIZE | DRAWING | SHT. | REV. |
|---|---|---|---|---|
| 1:4 | D | 003-0106-005 | 1 OF 3 | C |

UNIT OF MEAS.: PC

| SIZE | DRAWING | SHT. | REV. |
|---|---|---|---|
| D | 003-0106-005 | 2 OF 3 | C |

PROPRIETARY INFORMATION

INFORMATION CONTAINED HEREIN IS THE PROPERTY OF HURCO COMPANIES, INC. NO REPRODUCTION OR DISCLOSURE OF THIS INFORMATION SHALL BE MADE BY THE RECIPIENT TO ANY OTHER PERSON OR ORGANIZATION WITHOUT THE PRIOR WRITTEN CONSENT OF HURCO COMPANIES, INC.

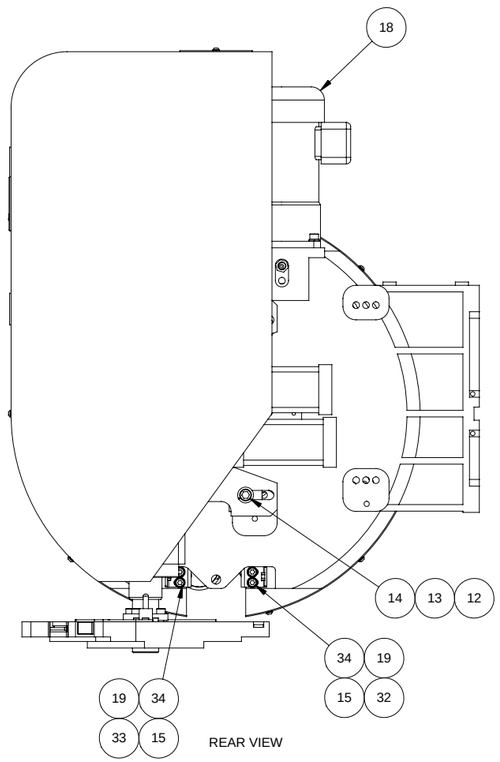


REAR VIEW

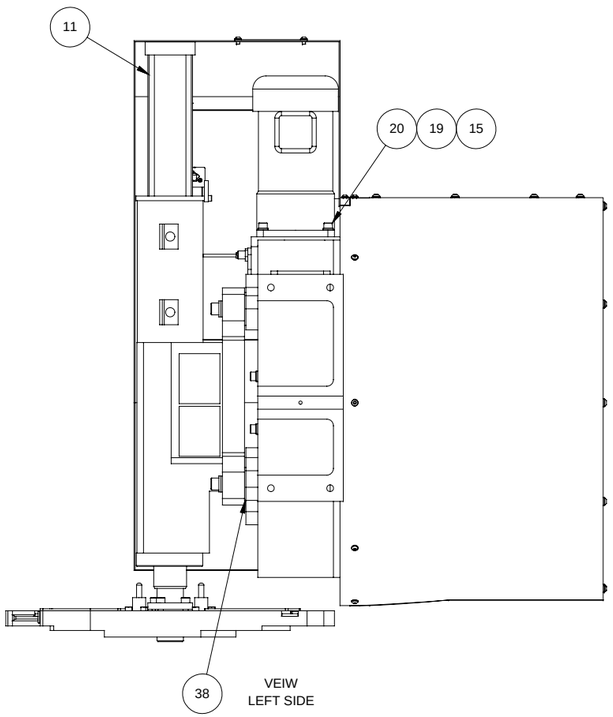


VEIW
LEFT SIDE

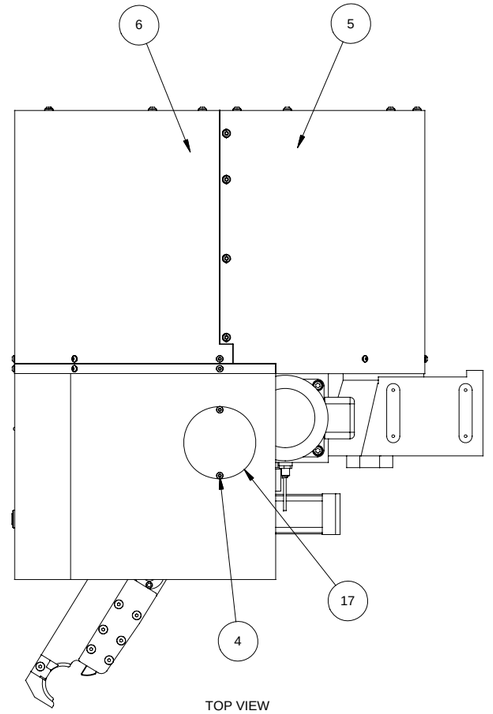


TOP VIEW

PARTS LIST

| . | QTY. | PART NUMBER | ITEM DESCRIPTION | ITEM |
|---|---|---|---|---|

| REV | E.C.N. NO. | REVISION DESCRIPTION | REV BY | DATE | CHK BY | DATE | APPD BY | DATE |
|---|---|---|---|---|---|---|---|---|
| A | 15531 | ORIGINAL RELEASE | | | | | | |

SURFACE TREATMENT: NONE

HEAT TREATMENT: NONE

FIRST USED ON: VM1

EXCEPT AS NOTED: ALL CORNERS MUST BE AS FOLLOWS
INSIDE: 1.3 X 45° OR 1.3 R MAX
OUTSIDE: 0.8 X 45° OR 1.3 R

EXCEPT AS NOTED: WELDING TOLERANCE MUST BE AS FOLLOWS ±1°

EXCEPT AS NOTED: ALL DIMENSIONS IN METRIC TOLERANCE
DECIMAL
.0 ±0.8
.00 ±0.4
.000 ±0.13
.0000 ±0.013
ANGULAR ±5°30'

HURCO COMPANIES, INC.
INDIANAPOLIS, IN U.S.A.

DESCRIPTION: ASS'Y, BT ATC 16T

| DRAWN | DATE | CHECKED | DATE | APPROVED | DATE |
|---|---|---|---|---|---|
| GLH | 12/12/02 | PFB | 12/12/02 | | |

| SCALE | SIZE | DRAWING | SHT. | REV. |
|---|---|---|---|---|
| 1:4 | D | 003-0106-005 | 2 OF 3 | C |

UNIT OF MEAS.: PC

| SIZE | DRAWING | SHT. | REV. |
|---|---|---|---|
| D | 003-0106-005 | 3 OF 3 | C |

PROPRIETARY INFORMATION

INFORMATION CONTAINED HEREIN IS THE PROPERTY OF HURCO COMPANIES, INC. NO REPRODUCTION OR DISCLOSURE OF THIS INFORMATION SHALL BE MADE BY THE RECIPIENT TO ANY OTHER PERSON OR ORGANIZATION WITHOUT THE PRIOR WRITTEN CONSENT OF HURCO COMPANIES, INC.

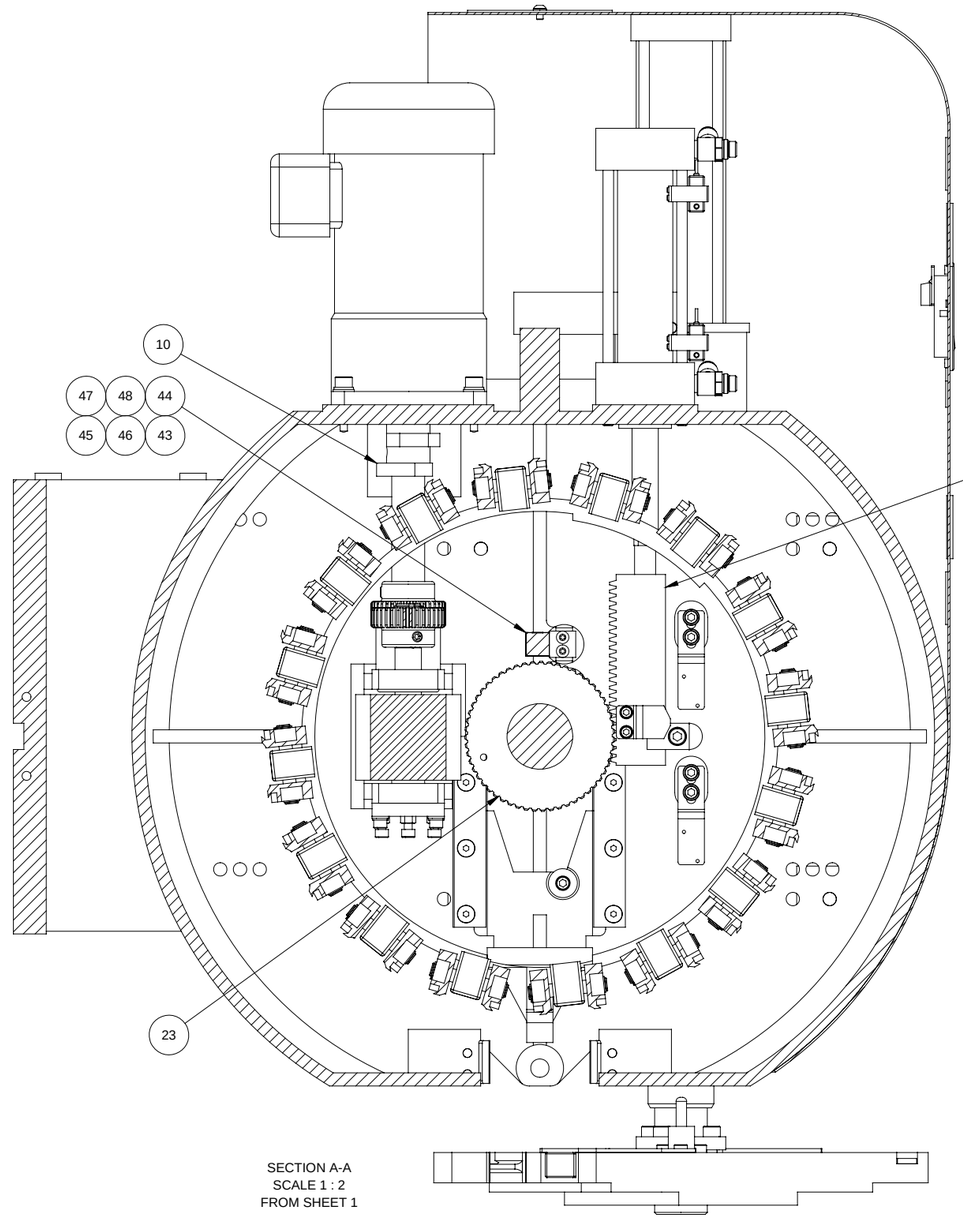


SECTION A-A
SCALE 1 : 2
FROM SHEET 1

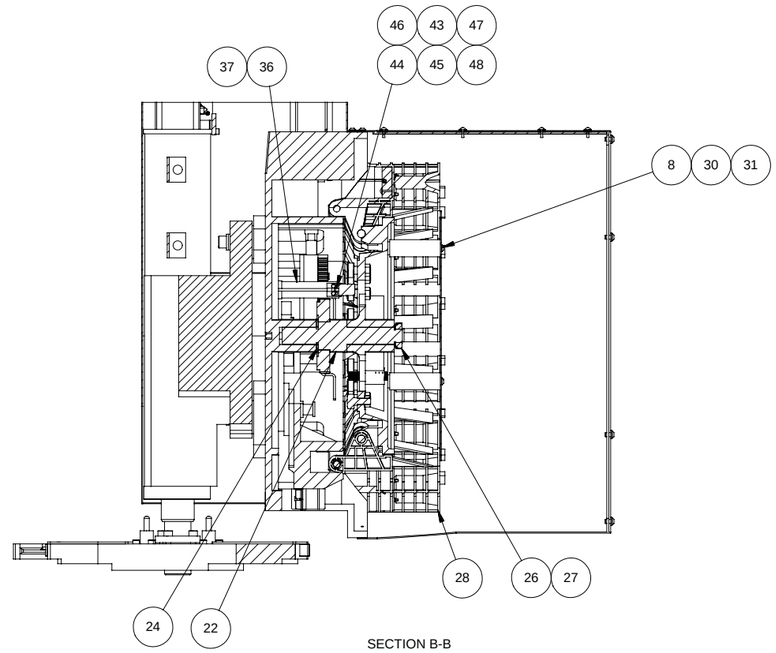


SECTION B-B
FROM SHEET 1

| REV | E.C.N. NO. | REVISION DESCRIPTION | REV BY | DATE | CHK BY | DATE | APPD BY | DATE |
|---|---|---|---|---|---|---|---|---|
| A | 15531 | ORIGINAL RELEASE | | | | | | |

| QTY. | PART NUMBER | ITEM DESCRIPTION | ITEM |
|---|---|---|---|

PARTS LIST

SURFACE TREATMENT: NONE

HEAT TREATMENT: NONE

FIRST USED ON: VM1

EXCEPT AS NOTED: ALL CORNERS MUST BE AS FOLLOWS
INSIDE: 1.3 X 45° OR 1.3 R MAX
OUTSIDE: 0.8 X 45° OR 1.3 R

EXCEPT AS NOTED: ALL DIMENSIONS IN METRIC TOLERANCE
DECIMAL: .0 ±0.8, .00 ±0.4, .000 ±0.13, .0000 ±0.013
ANGULAR ±0°30'

EXCEPT AS NOTED: WELDING TOLERANCE MUST BE AS FOLLOWS ±3°

HURCO COMPANIES, INC.
INDIANAPOLIS, IN U.S.A.

DESCRIPTION: ASS'Y, BT ATC 16T

| DRAWN | DATE | CHECKED | DATE | APPROVED | DATE |
|---|---|---|---|---|---|
| GLH | 12/12/02 | PFB | 12/12/02 | | |

| SCALE | SIZE | DRAWING | SHT. | REV. |
|---|---|---|---|---|
| 1:4 | D | 003-0106-005 | 3 OF 3 | C |

UNIT OF MEAS.: PC

| SIZE | DRAWING | SHT. | REV. | PROPRIETARY INFORMATION |
|---|---|---|---|---|
| D | 003-0106-006EX | 1 OF 1 | A | INFORMATION CONTAINED HEREIN IS THE PROPERTY OF HURCO COMPANIES, INC. NO REPRODUCTION OR DISCLOSURE OF THIS INFORMATION SHALL BE MADE BY THE RECIPIENT TO ANY OTHER PERSON OR ORGANIZATION WITHOUT THE PRIOR WRITTEN CONSENT OF HURCO COMPANIES, INC. |

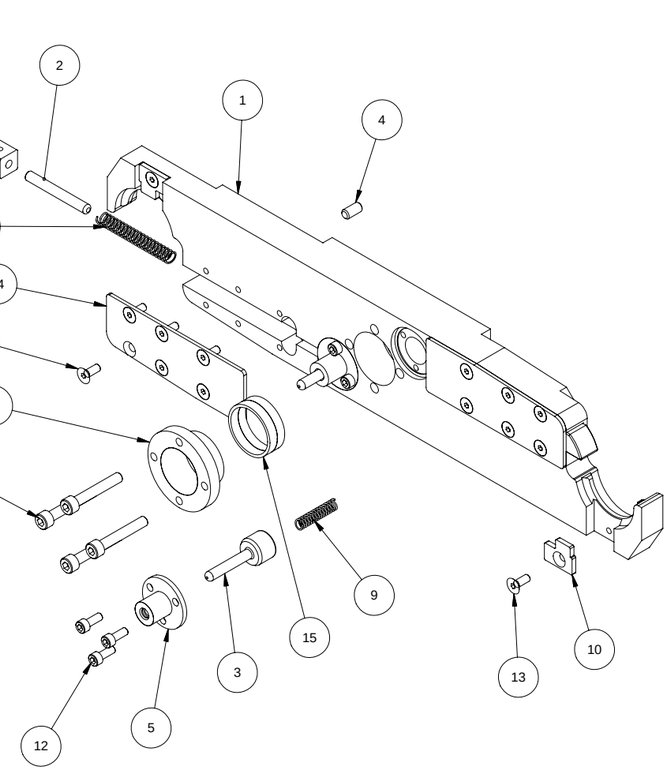


| QTY. | PART NO. | DESCRIPTION | ITEM |
|---|---|---|---|
| 2 | 219-0001-048 | RING, RETAINING | 15 |
| 2 | 803-0108-006 | COVER, PLATE, FINGER | 14 |
| 14 | 102-5004-005 | FHSCS, M 6 X 1.0 P X 16 LG | 13 |
| 6 | 101-5008-004 | SHCS, M 6 X 1.0 P X 16 LG | 12 |
| 4 | 101-5010-012 | SHCS, M 8 X 1.25 P X 50 LG | 11 |
| 2 | 803-0108-005 | KEY | 10 |
| 2 | 803-1012-028 | SPRING, ARM PIN | 9 |
| 2 | 803-1012-027 | SPRING, ARM, FINGER | 8 |
| 1 | 803-1003-078 | COVER | 7 |
| 2 | 803-0108-008 | FINGER | 6 |
| 2 | 803-0108-015 | BUSHING, PIN, ATC | 5 |
| 2 | 803-1022-007 | PIN, 8.0 DIA X 16 LG | 4 |
| 2 | 803-0108-003 | PIN, STOP (BT) | 3 |
| 2 | 803-0108-004 | PIN, SLIDE BLOCK | 2 |
| 1 | 803-0108-025 | ARM, SWING, BT | 1 |

| REV | E.C.N. NO. | REVISION DESCRIPTION | REV BY | DATE | CHK BY | DATE | APPD BY | DATE |
|---|---|---|---|---|---|---|---|---|
| A | 15531 | ORIGINAL RELEASE | | | | | | |

SURFACE TREATMENT: NONE

HEAT TREATMENT: NONE

FIRST USED ON: VM1

EXCEPT AS NOTED: ALL CORNERS MUST BE AS FOLLOWS
INSIDE: 1.3 X 45° OR 1.3 R MAX
OUTSIDE: 0.8 X 45° OR 1.3 R

EXCEPT AS NOTED: ALL DIMENSIONS IN METRIC TOLERANCE
DECIMAL
.X ±0.8
.XX ±0.4
.XXX ±0.13
.XXXX ±0.013
ANGULAR ±0°30'

EXCEPT AS NOTED: WELDING TOLERANCE MUST BE AS FOLLOWS
±3

HURCO COMPANIES, INC.
INDIANAPOLIS, IN U.S.A.

DESCRIPTION: ASS'Y, BT SWING ARM

| DRAWN | DATE | CHECKED | DATE | APPROVED | DATE |
|---|---|---|---|---|---|
| GLH | 11/11/2002 | ML | 11/11/2002 | | |

| SCALE | SIZE | DRAWING | SHT. | REV. |
|---|---|---|---|---|
| 1:2 | D | 003-0106-006EX | 1 OF 1 | A |

UNIT OF MEAS.: PC

# Ass'y., Tool Holder, 003-0106-008—Rev. A

| SIZE | DRAWING | SHT. | REV. | PROPRIETARY INFORMATION |
|---|---|---|---|---|
| D | 003-0106-008EX | 1 OF 1 | A | INFORMATION CONTAINED HEREIN IS THE PROPERTY OF HURCO COMPANIES, INC. NO REPRODUCTION OR DISCLOSURE OF THIS INFORMATION SHALL BE MADE BY THE RECIPIENT TO ANY OTHER PERSON OR ORGANIZATION WITHOUT THE PRIOR WRITTEN CONSENT OF HURCO COMPANIES, INC. |

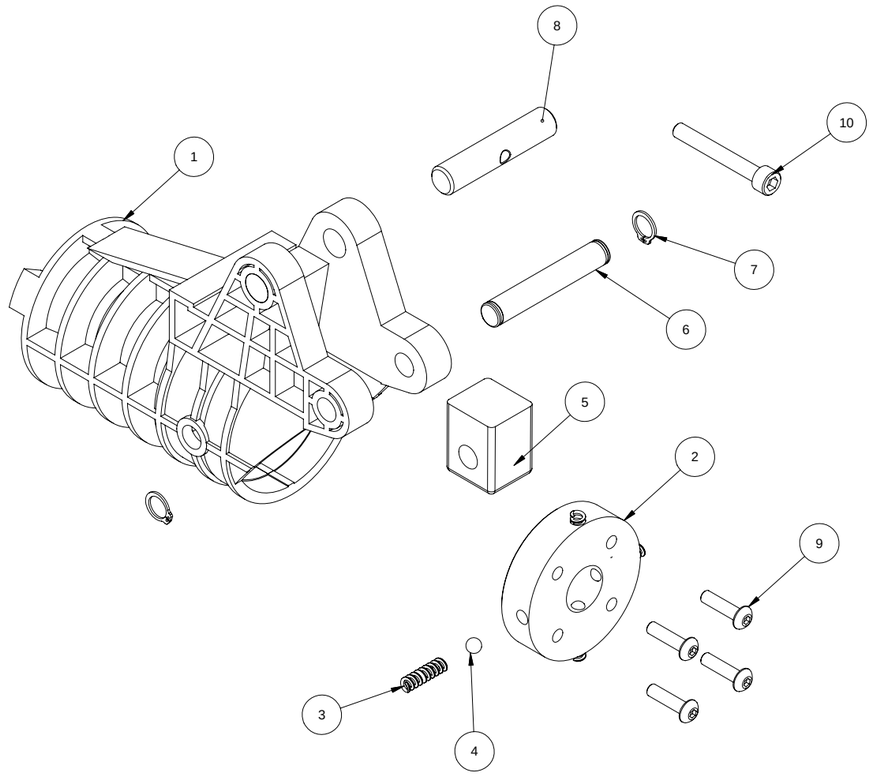


| QTY. | PART NO. | DESCRIPTION | ITEM |
|---|---|---|---|
| 1 | 101-5008-012 | SHCS, M 6 X 1.0 P X 45 LG | 10 |
| 4 | 108-5003-008 | BHSCS, M 5 X 0.8 P X 20 LG | 9 |
| 1 | 803-0108-007 | SHAFT, POCKET | 8 |
| 2 | 113-0002-044 | SNAP RING, EXTERNAL S10 | 7 |
| 1 | 803-6005-022 | PIN | 6 |
| 1 | 803-6001-042 | BLOCK, GUIDE | 5 |
| 4 | 610-0501-022 | BALL, STEEL 6mm DIA. | 4 |
| 4 | 605-0029-019 | SPRING, COMPRESSION | 3 |
| 1 | 803-6005-025 | RETAINER, TOOL (CAT) | 2 |
| 1 | 803-6001-038 | HOLDER, TOOL | 1 |

| REV | E.C.N. NO. | REVISION DESCRIPTION | REV BY | DATE | CHK BY | DATE | APPD BY | DATE |
|---|---|---|---|---|---|---|---|---|
| A | 15531 | ORIGINAL RELEASE | | | | | | |

SURFACE TREATMENT: NONE

HEAT TREATMENT: NONE

FIRST USED ON: VM1

EXCEPT AS NOTED: ALL CORNERS MUST BE AS FOLLOWS
INSIDE: 1.3 X 45° OR 1.3 R MAX
OUTSIDE: 0.8 X 45° OR 1.3 R

EXCEPT AS NOTED: WELDING TOLERANCE MUST BE AS FOLLOWS
±3

EXCEPT AS NOTED: ALL DIMENSIONS IN METRIC TOLERANCE
DECIMAL
.0 ±0.8
.00 ±0.4
.000 ±0.13
.0000 ±0.013
ANGULAR ±1°30'

HURCO COMPANIES, INC.
INDIANAPOLIS, IN U.S.A.

DESCRIPTION: ASS'Y, TOOL HOLDER

| DRAWN | DATE | CHECKED | DATE | APPROVED | DATE |
|---|---|---|---|---|---|
| GLH | 11/14/2002 | PFB | 11/14/2002 | | |

SCALE: 1:1
UNIT OF MEAS.: PC
SIZE: D
DRAWING: 003-0106-008EX
SHT. 1 OF 1
REV. A

# Ass'y., Tool Holder Up/Down, 003-0106-009—Rev. A

| SIZE | DRAWING | SHT. | REV. |
|---|---|---|---|
| D | 003-0106-009EX | 1 OF 1 | A |

PROPRIETARY INFORMATION

INFORMATION CONTAINED HEREIN IS THE PROPERTY OF HURCO COMPANIES, INC. NO REPRODUCTION OR DISCLOSURE OF THIS INFORMATION SHALL BE MADE BY THE RECIPIENT TO ANY OTHER PERSON OR ORGANIZATION WITHOUT THE PRIOR WRITTEN CONSENT OF HURCO COMPANIES, INC.

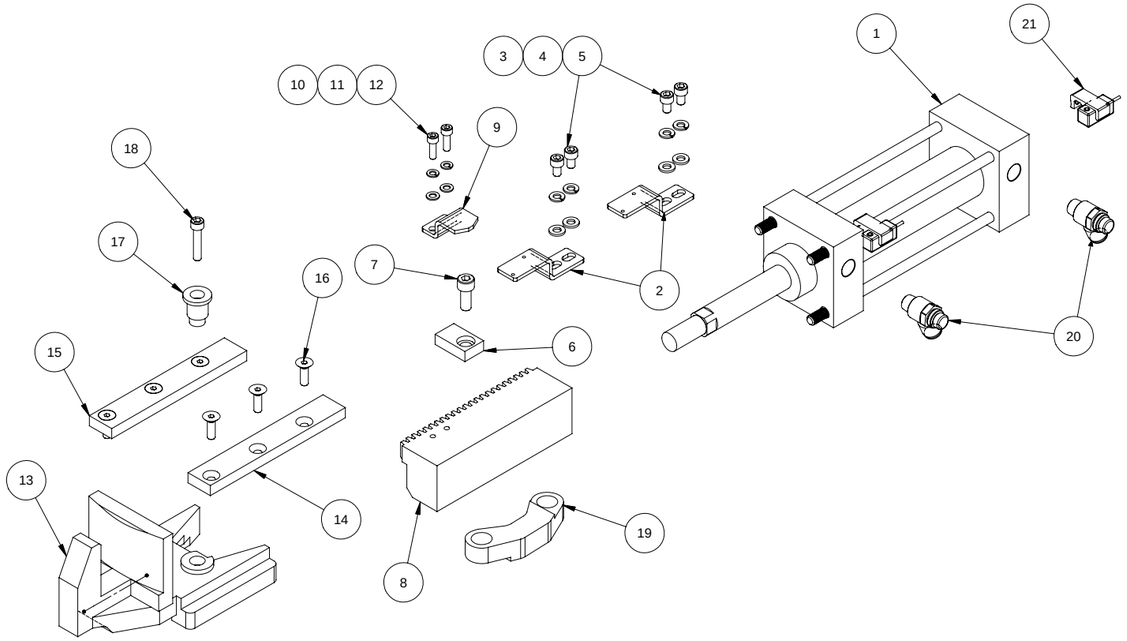


| ITEM | DESCRIPTION | PART NO. | QTY. |
|---|---|---|---|
| 21 | SWITCH, LIMIT | 404-5202-041 | 2 |
| 20 | ELBOW, FLOW CONTROL | 502-0027-009 | 2 |
| 19 | BRACKET, JOINT, TOOL CLAW | 803-0101-045 | 1 |
| 18 | SHCS, M 6 X 1.0 P X 30 LG | 101-5008-009 | 1 |
| 17 | SHAFT, ADJUSTMENT | 803-0108-011 | 1 |
| 16 | FHSCS, M 6 X 1.0 P X 20 LG | 102-5004-007 | 6 |
| 15 | PLATE, CLAMP, TOOL CLAW, RH | 803-0100-017 | 1 |
| 14 | PLATE, CLAMP, TOOL CLAW, LH | 803-0100-018 | 1 |
| 13 | BRACKET, TOOL CLAW, ATC | 803-0101-044 | 1 |
| 12 | SHCS, M 5 X 0.8 P X 16 LG | 101-5007-022 | 2 |
| 11 | LOCKWASHER, M5, HELICAL SPRING | 110-0046-006 | 2 |
| 10 | WASHER, FLAT, M5 | 110-5001-003 | 2 |
| 9 | BRACKET, DOG, ATC | 803-0101-043 | 1 |
| 8 | GEAR RACK, ATC | 803-0108-010 | 1 |
| 7 | SHCS, M 8 X 1.25 P X 20 LG | 101-5010-005 | 1 |
| 6 | BRACKET, GEAR RACK, ATC | 803-0101-042 | 1 |
| 5 | SHCS, M 6 X 1.0 P X 10 LG | 101-5008-002 | 4 |
| 4 | LOCKWASHER, M6, HELICAL SPRING | 110-0046-007 | 4 |
| 3 | WASHER, FLAT, M6 | 110-5001-004 | 4 |
| 2 | BRACKET, LIMIT SWITCH, ATC | 803-0101-041 | 2 |
| 1 | CYLINDER | 501-0965-039 | 1 |

| REV | E.C.N. NO. | REVISION DESCRIPTION | REV BY | DATE | CHK BY | DATE | APPD BY | DATE |
|---|---|---|---|---|---|---|---|---|
| A | 15531 | ORIGINAL RELEASE | | | | | | |

SURFACE TREATMENT: NONE

HEAT TREATMENT: NONE

FIRST USED ON: VM1

EXCEPT AS NOTED: ALL CORNERS MUST BE AS FOLLOWS
INSIDE: 1.3 X 45° OR 1.3 R MAX
OUTSIDE: 0.8 X 45° OR 1.3 R

EXCEPT AS NOTED: ALL DIMENSIONS IN METRIC TOLERANCE
DECIMAL .0 ±0.8, .00 ±0.4, .000 ±0.13, .0000 ±0.013, ANGULAR ±0°30'

EXCEPT AS NOTED: WELDING TOLERANCE MUST BE AS FOLLOWS ±3

HURCO COMPANIES, INC.
INDIANAPOLIS, IN U.S.A.

DESCRIPTION: ASS'Y, TOOL HOLDER UP/DOWN

| DRAWN | DATE | CHECKED | DATE | APPROVED | DATE |
|---|---|---|---|---|---|
| GLH | 11/15/2002 | PFB | 11/15/2002 | | |

| SCALE | SIZE | DRAWING | SHT. | REV. |
|---|---|---|---|---|
| 1:2 | D | 003-0106-009EX | 1 OF 1 | A |

UNIT OF MEAS.: PC

# Ass'y., ATC Drive, 003-0106-010—Rev. B

| SIZE | DRAWING | SHT. | REV. | PROPRIETARY INFORMATION |
|---|---|---|---|---|
| D | 003-0106-010EX | 1 OF 1 | B | INFORMATION CONTAINED HEREIN IS THE PROPERTY OF HURCO COMPANIES, INC. NO REPRODUCTION OR DISCLOSURE OF THIS INFORMATION SHALL BE MADE BY THE RECIPIENT TO ANY OTHER PERSON OR ORGANIZATION WITHOUT THE PRIOR WRITTEN CONSENT OF HURCO COMPANIES, INC. |

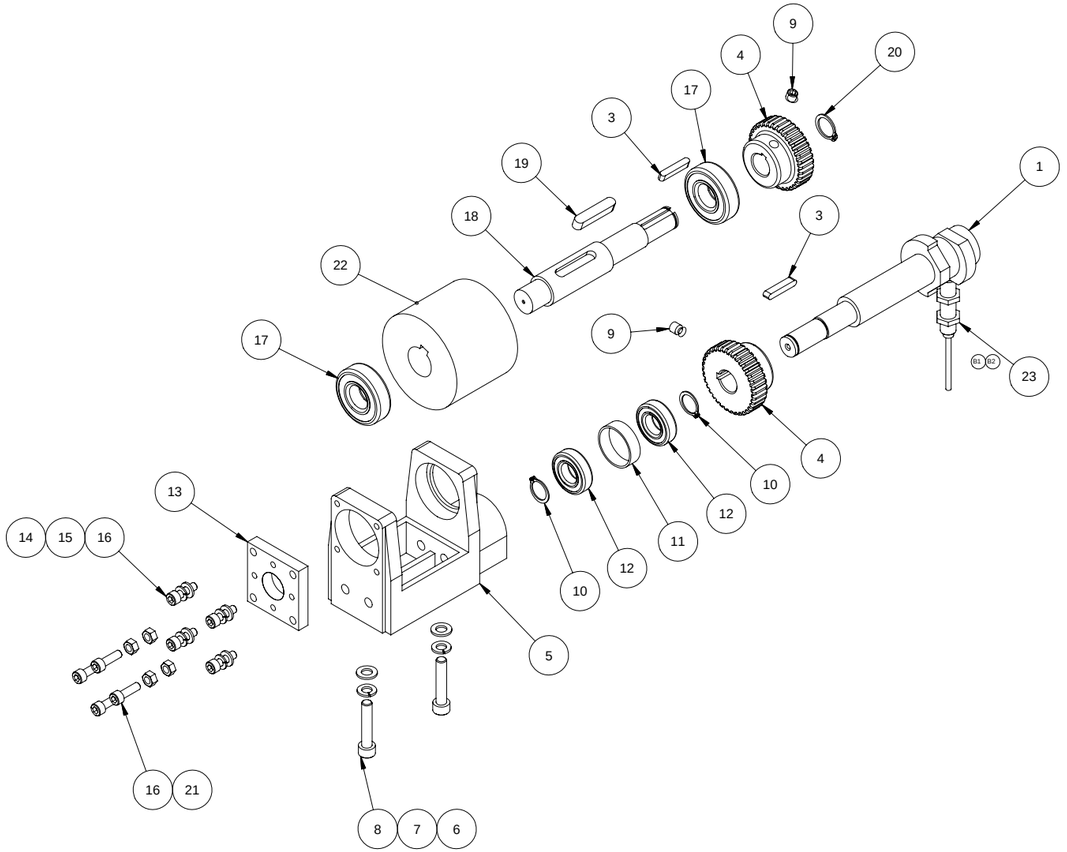


| | ITEM | DESCRIPTION | PART NO. | QTY. |
|---|---|---|---|---|
| 02 | 23 | SWITCH, PROXIMITY | 404-9300-022 | 1 |
| | 22 | CAM, INDEXING | 803-0108-014 | 1 |
| | 21 | NUT, HEX, M6 x 1.0P | 117-5013-001 | 4 |
| | 20 | RING, RETAINING S18 | 113-0002-068 | 1 |
| | 19 | KEY, 8mm x 8mm x 41 LG | 609-0513-023 | 1 |
| | 18 | SHAFT, CAM, ATC | 803-0108-013 | 1 |
| | 17 | BEARING, ANGULAR CONTACT | 211-0028-017 | 2 |
| | 16 | SHCS, M 6 X 1.0 P X 20 LG | 101-5008-006 | 8 |
| | 15 | LOCKWASHER, M6, HELICAL SPRING | 110-0046-007 | 4 |
| | 14 | WASHER, FLAT, M6 | 110-5001-004 | 4 |
| | 13 | PLATE, ADJUSTING | 803-1000-078 | 1 |
| | 12 | BEARING, BALL 6003ZZ | 211-0001-073 | 2 |
| | 11 | SPACER, BEARING | 803-0106-024 | 1 |
| | 10 | RING, RETAINING S17 | 113-0002-067 | 2 |
| | 9 | SSS, M8 X 1.25 P X 8 LG, CUP PT. | 103-5009-004 | 2 |
| | 8 | SHCS, M8 X 1.25P X 40 LG | 101-5010-010 | 2 |
| | 7 | LOCKWASHER, M8, HELICAL SPRING | 110-0046-008 | 2 |
| | 6 | WASHER, FLAT, M8 | 110-5001-005 | 2 |
| | 5 | BRACKET, CAM SUPPORT | 803-0101-046 | 1 |
| | 4 | GEAR, 36T | 803-1046-055 | 2 |
| | 3 | KEY, 5mm X 6mm X 30 LG | 609-0513-022 | 3 |
| 01 | 2 | SWITCH, PROXIMITY | 404-9300-008 | 0 |
| | 1 | SHAFT, DRIVE, ATC | 803-0108-012 | 1 |

| REV | E.C.N. NO. | REVISION DESCRIPTION | REV BY | DATE | CHK BY | DATE | APPD BY | DATE |
|---|---|---|---|---|---|---|---|---|
| B | . | 1) WAS 404-9300-008 X 2 BY ERROR; 2) ADDED 404-9300-022 X 1; | ROD | 0618 0003 | . | . | . | . |
| A | 15531 | ORIGINAL RELEASE | | | | | | |

SURFACE TREATMENT: NONE

HEAT TREATMENT: NONE

FIRST USED ON: VM1

EXCEPT AS NOTED: ALL CORNERS MUST BE AS FOLLOWS
INSIDE: 1.3 X 45° OR 1.3 R MAX
OUTSIDE: 0.8 X 45° OR 1.3 R

EXCEPT AS NOTED: WELDING TOLERANCE MUST BE AS FOLLOWS ±3

EXCEPT AS NOTED: ALL DIMENSIONS IN METRIC TOLERANCE
DECIMAL .0 ±0.8, .00 ±0.4, .000 ±0.13, .0000 ±0.013
ANGULAR ±0°30'

HURCO COMPANIES, INC.
INDIANAPOLIS, IN U.S.A.

DESCRIPTION: ASS'Y, ATC DRIVE

| DRAWN | DATE | CHECKED | DATE | APPROVED | DATE |
|---|---|---|---|---|---|
| GLH | 11/21/2002 | PFB | 11/21/2002 | | |

SCALE 1:2 | UNIT OF MEAS. PC | SIZE D | DRAWING 003-0106-010EX | SHT. 1 OF 1 | REV. B

# Ass'y., Enclosure, VM1, 003-0107-001—Rev. A

| SIZE | DRAWING | SHT. | REV. |
|---|---|---|---|
| D | 003-0107-001 | 1 OF 2 | A |

**PROPRIETARY INFORMATION**

INFORMATION CONTAINED HEREIN IS THE PROPERTY OF HURCO COMPANIES, INC. NO REPRODUCTION OR DISCLOSURE OF THIS INFORMATION SHALL BE MADE BY THE RECIPIENT TO ANY OTHER PERSON OR ORGANIZATION WITHOUT THE PRIOR WRITTEN CONSENT OF HURCO COMPANIES, INC.

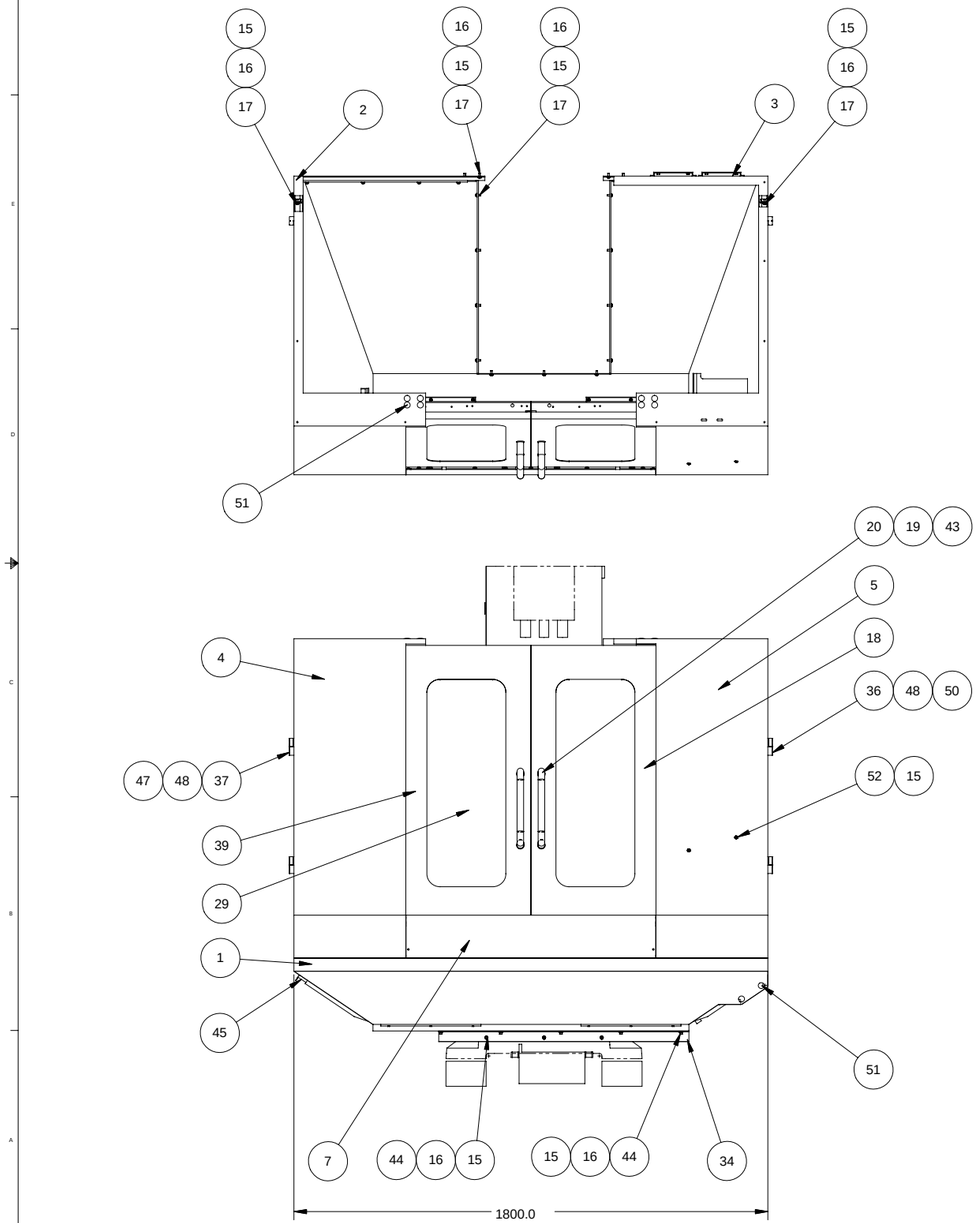


| ITEM | DESCRIPTION | PART NO. | QTY. |
|---|---|---|---|
| 53 | NUT, HEX, M6 x 1.0P | 117-5013-001 | 2 |
| 52 | BHCS, M6 X 1.0P X 8 LG | 108-5004-013 | 2 |
| 51 | PLUG, HOLE 3/4" DIA | 408-8001-071 | 10 |
| 50 | SHCS, M 5 X 0.8 P X 12 LG | 101-5007-003 | 26 |
| 49 | BHCS, M 5 X 0.8 P X 12 LG | 108-5003-004 | 28 |
| 48 | LOCKWASHER, M5, HELICAL SPRING | 110-0046-006 | 54 |
| 47 | WASHER, FLAT, M5 | 110-5001-003 | 36 |
| 46 | BHSCS, M 6 X 1.0 P X 10 LG | 108-5004-001 | 12 |
| 45 | COVER, PAN CHIP | 803-0102-023 | 2 |
| 44 | SHCS, M 6 X 1.0 P X 16 LG | 101-5008-004 | 8 |
| 43 | SHCS, M 8 X 1.25 P X 20 LG | 101-5010-005 | 4 |
| 42 | NUT, HEX M10 X 1.5 P | 117-5016-001 | 4 |
| 41 | LOCKWASHER, M10, HELICAL SPRING | 110-0046-009 | 4 |
| 40 | RING, RETAINING, R28 | 113-0001-045 | 4 |
| 39 | DOOR, LEFT ENCLOSURE | 803-0103-006 | 1 |
| 38 | PANEL, ACCESS, ENCLOSURE, LEFT | 803-0114-005 | 1 |
| 37 | HINGE, R.H. | 603-5002-002 | 2 |
| 36 | HINGE, L.H. | 603-5002-001 | 2 |
| 35 | PANEL, ACCESS, ENCLOSURE, RIGHT | 803-0114-004 | 1 |
| 34 | BRACKET, PAN, CHIP | 803-0101-031 | 1 |
| 33 | ELBOW, 1/2" PTMx1/2" I.D. H | 506-6051-057 | 1 |
| 32 | TANK, RECLAIM, OIL, WAY | 803-1049-003 | 1 |
| 31 | ANGLE, WINDOW VERTICAL | 803-0103-011 | 4 |
| 30 | ANGLE, WINDOW HORIZONTAL | 803-0103-010 | 4 |
| 29 | WINDOW, FRONT ENCLOSURE DOOR | 803-0103-008 | 2 |
| 28 | SHAFT, ROLLER | 803-0112-001 | 4 |
| 27 | SPACER, ROLLER | 803-0100-012 | 4 |
| 26 | SPACER, RAIL, BEARING | 803-0112-002 | 4 |
| 25 | BEARING, ROLLER | 211-2601-021 | 4 |
| 24 | ROLLER, ENCLOSURE DOOR | 803-0112-003 | 4 |
| 23 | CUSHION, DOOR, FRONT | 803-1036-008 | 4 |
| 22 | CUSHION, ENCLOSURE | 803-1036-009 | 4 |
| 21 | RAIL, DOOR, UPPER | 803-0113-002 | 2 |
| 20 | HANDLE, DOOR, ENCLOSURE | 803-1026-003 | 2 |
| 19 | WASHER, HANDLE, DOOR, ENCLOSURE | 803-1013-001 | 4 |
| 18 | DOOR, RIGHT ENCLOSURE | 803-0103-007 | 1 |
| 17 | BHSCS, M 6 X 1.0 P 16 LG | 108-5004-004 | 80 |
| 16 | LOCKWASHER, M6, HELICAL SPRING | 110-0046-007 | 100 |
| 15 | WASHER, FLAT, M6 | 110-5001-004 | 90 |
| 14 | LOCKWASHER, M8, HELICAL SPRING | 110-0046-008 | 12 |
| 13 | NUT, HEX M8 X 1.25 P | 117-5015-001 | 8 |
| 12 | WASHER, FLAT, M8 | 110-5001-005 | 12 |
| 11 | SHCS, M8 X 1.25P X 40 LG | 101-5010-010 | 8 |
| 10 | BEARING, ROLLER, TAPERED 75 X 115 X 25 MM | 211-0009-041 | 8 |
| 9 | SPACER, BEARING, RAIL, UPPER | 803-1042-053 | 8 |
| 8 | RAIL, DOOR, LOWER | 803-0113-001 | 2 |
| 7 | PANEL, ENCLOSURE, CENTER | 803-0103-009 | 1 |
| 6 | PLATE, PAN CHIP | 803-0100-011 | 2 |
| 5 | ENCLOSURE, RIGHT SIDE | 803-0103-005 | 1 |
| 4 | ENCLOSURE, LEFT SIDE | 803-0103-004 | 1 |
| 3 | ENCLOSURE, RIGHT REAR SIDE | 803-0103-003 | 1 |
| 2 | ENCLOSURE, LEFT REAR SIDE | 803-0103-002 | 1 |
| 1 | PAN, CHIP | 803-0103-001 | 1 |

| REV | E.C.N. NO. | REVISION DESCRIPTION | REV BY | DATE | CHK BY | DATE | APPD BY | DATE |
|---|---|---|---|---|---|---|---|---|
| A | 15484 | ORIGINAL RELEASE | | | | | | |

SURFACE TREATMENT: NONE

HEAT TREATMENT: NONE

FIRST USED ON: VM1

EXCEPT AS NOTED: ALL CORNERS MUST BE AS FOLLOWS
INSIDE: 1.3 X 45° OR 1.3 R MAX
OUTSIDE: 0.8 X 45° OR 1.3 R

EXCEPT AS NOTED: WELDING TOLERANCE MUST BE AS FOLLOWS ±3

EXCEPT AS NOTED: ALL DIMENSIONS IN METRIC TOLERANCE
DECIMAL: .0 ±0.8, .00 ±0.4, .000 ±0.13, .0000 ±0.013
ANGULAR ±0°30'

HURCO COMPANIES, INC.
INDIANAPOLIS, IN U.S.A.

DESCRIPTION: ASS'Y, ENCLOSURE, VM1

| DRAWN | DATE | CHECKED | DATE | APPROVED | DATE |
|---|---|---|---|---|---|
| Kevin | 07-05-02 | MEL | 07-05-02 | JLW | 09-16-02 |

| SCALE | SIZE | DRAWING | SHT. | REV. |
|---|---|---|---|---|
| 1:10 | D | 003-0107-001 | 1 OF 2 | A |

UNIT OF MEAS.: PC

| SIZE | DRAWING | SHT. | REV. | PROPRIETARY INFORMATION |
|---|---|---|---|---|
| D | 003-0107-001 | 2 OF 2 | A | INFORMATION CONTAINED HEREIN IS THE PROPERTY OF HURCO COMPANIES, INC. NO REPRODUCTION OR DISCLOSURE OF THIS INFORMATION SHALL BE MADE BY THE RECIPIENT TO ANY OTHER PERSON OR ORGANIZATION WITHOUT THE PRIOR WRITTEN CONSENT OF HURCO COMPANIES, INC. |

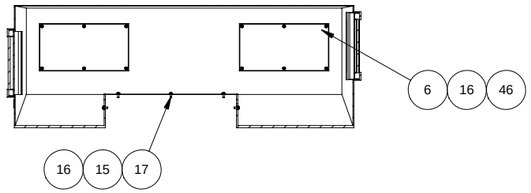


SECTION: D-D

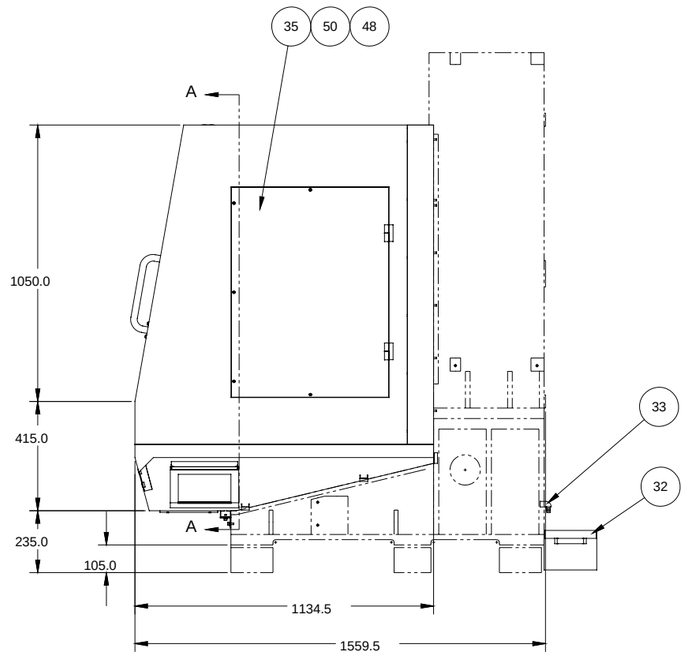


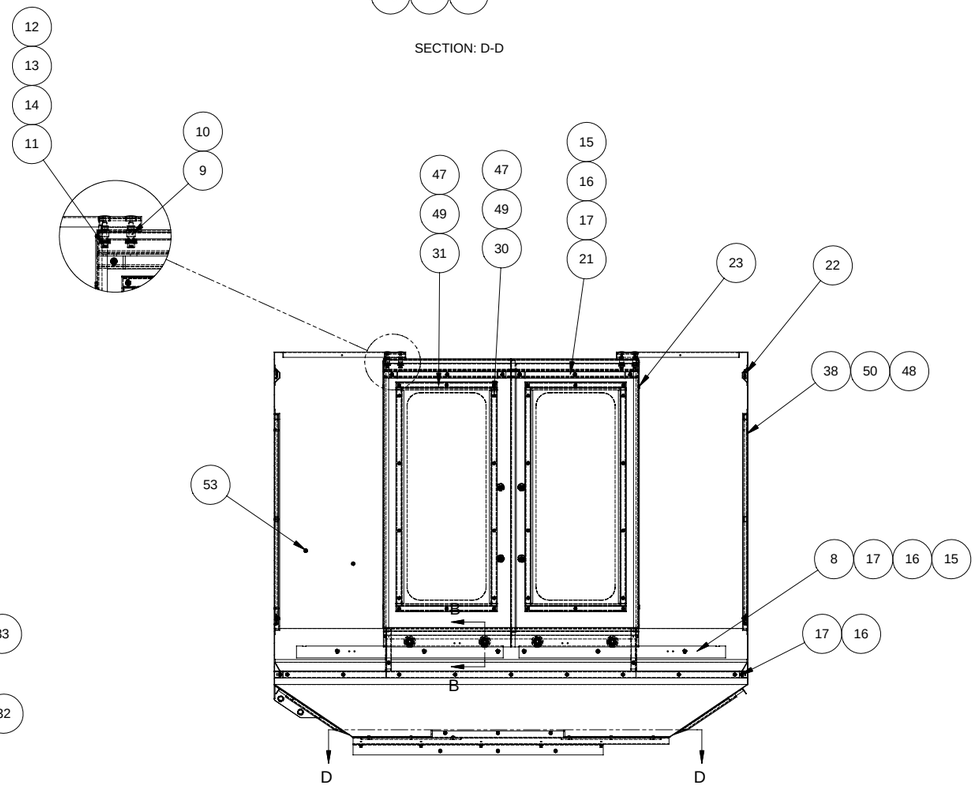


SECTION: A-A

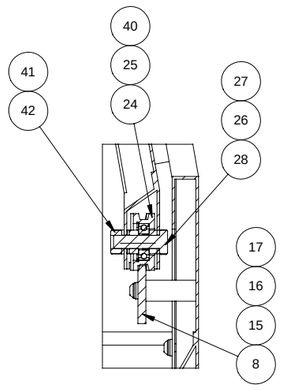


SECTION: B-B
SCALE: 1 : 2

| REV | E.C.N. NO. | REVISION DESCRIPTION | REV BY | DATE | CHK BY | DATE | APPD BY | DATE |
|---|---|---|---|---|---|---|---|---|
| A | 15484 | ORIGINAL RELEASE | | | | | | |

SURFACE TREATMENT: NONE

HEAT TREATMENT: NONE

FIRST USED ON: VM1

EXCEPT AS NOTED: ALL CORNERS MUST BE AS FOLLOWS
INSIDE: 1.3 x 45° OR 1.3 R MAX
OUTSIDE: 0.8 x 45° OR 1.3 R

EXCEPT AS NOTED: WELDING TOLERANCE MUST BE AS FOLLOWS ±3

EXCEPT AS NOTED: ALL DIMENSIONS IN METRIC TOLERANCE
DECIMAL
.0 ±0.8
.00 ±0.4
.000 ±0.13
.0000 ±0.013
ANGULAR ±3°30'

HURCO COMPANIES, INC.
INDIANAPOLIS, IN U.S.A.

DESCRIPTION: ASS'Y, ENCLOSURE, VM1

| DRAWN | DATE | CHECKED | DATE | APPROVED | DATE |
|---|---|---|---|---|---|
| Kevin | 07-05-02 | MEL | 07-05-02 | JLW | 09-16-02 |

| SCALE | SIZE | DRAWING | SHT. | REV. |
|---|---|---|---|---|
| 1:10 | D | 003-0107-001 | 2 OF 2 | A |

UNIT OF MEAS.: PC

# Ass'y., Enclosure Door Switch, 003-0107-002—Rev. C

| SIZE | DRAWING | SHT. | REV. |
|---|---|---|---|
| C | 003-0107-002EX | 1 OF 1 | C |

**PROPRIETARY INFORMATION**

INFORMATION CONTAINED HEREIN IS THE PROPERTY OF HURCO COMPANIES, INC. NO REPRODUCTION OR DISCLOSURE OF THIS INFORMATION SHALL BE MADE BY THE RECIPIENT TO ANY OTHER PERSON OR ORGANIZATION WITHOUT THE PRIOR WRITTEN CONSENT OF HURCO COMPANIES, INC.

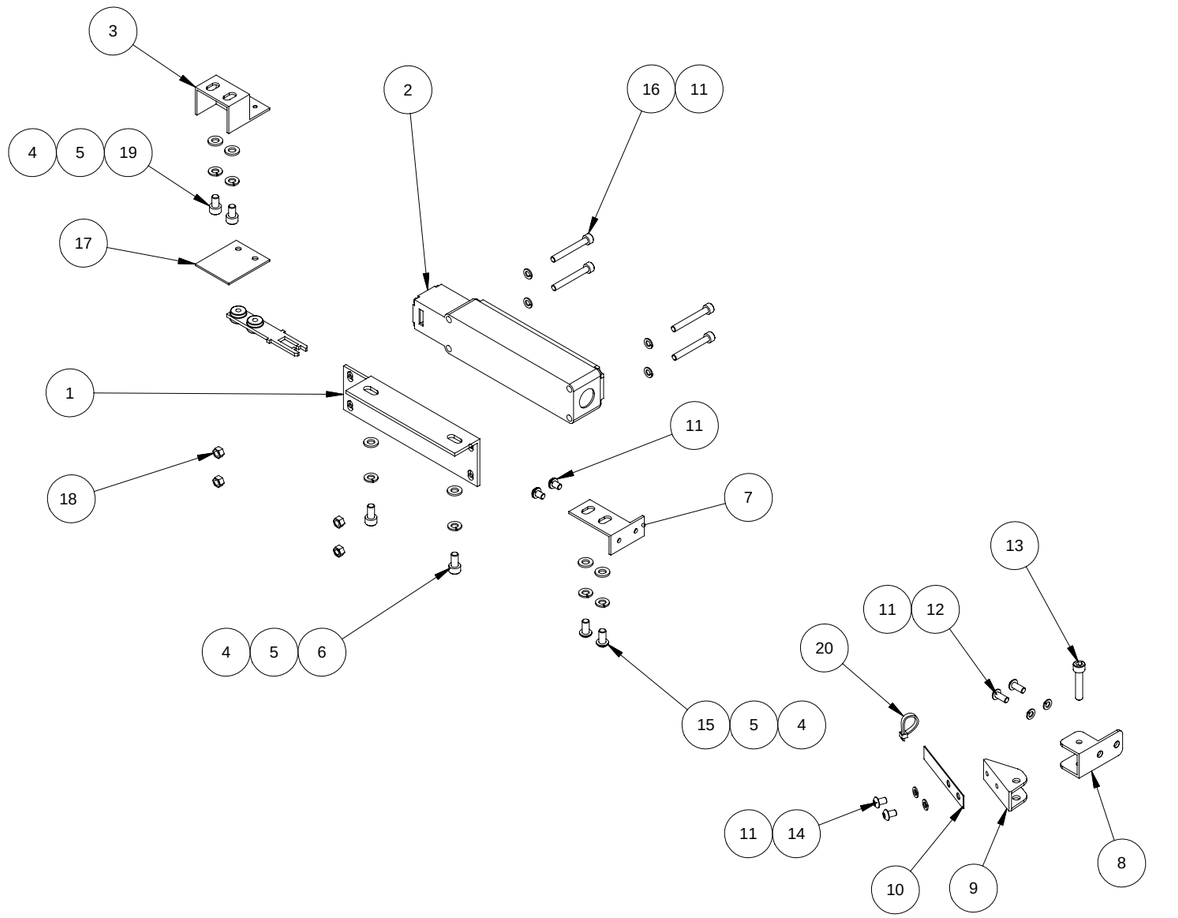


| | ITEM | QTY. | PART NO. | DESCRIPTION |
|---|---|---|---|---|
| C2 | 20 | 6 | 406-5001-005 | TIE WRAP, MEDIUM |
| C2 | 19 | 2 | 101-5008-002 | SHCS, M 6 X 1.0 P X 10 LG |
| B1 | 18 | 4 | 117-5012-001 | NUT, HEX M5 X 0.8 P |
| | 17 | 1 | 803-0102-027 | COVER,BRACKET, SWITCH, KEY |
| | 16 | 4 | 101-5007-011 | SHCS, M 5 X 0.8 P X 40 LG |
| | 15 | 2 | 108-5004-002 | BHSCS, M 6 X 1.0 P X 12 LG |
| | 14 | 4 | 108-5003-002 | BHSCS, M 5 X 0.8 P X 8 LG |
| | 13 | 1 | 101-5008-009 | SHCS, M 6 X 1.0 P X 30 LG |
| | 12 | 2 | 108-5003-004 | BHCS, M 5 X 0.8 P X 12 LG |
| | 11 | 10 | 110-0046-006 | LOCKWASHER, M5, HELICAL SPRING |
| | 10 | 1 | 803-1000-007 | PLATE, SPRING, X AXIS |
| | 9 | 1 | 803-0106-020 | HINGE (B), CABLE SPRING |
| | 8 | 1 | 803-0106-019 | HINGE (A), CABLE SPRING |
| | 7 | 1 | 803-0101-025 | BRACKET, SPRING PLATE |
| C1 | 6 | 2 | 101-5008-003 | SHCS, M 6 X 1.0 P X 12 LG |
| | 5 | 6 | 110-0046-007 | LOCKWASHER, M6, HELICAL SPRING |
| | 4 | 6 | 110-5001-004 | WASHER, FLAT, M6 |
| | 3 | 1 | 803-0101-024 | BRACKET, SWITCH, KEY |
| | 2 | 1 | 404-8241-051 | SWITCH, SAFETY |
| | 1 | 1 | 803-0101-023 | BRACKET, DOOR SWITCH |

| REV | E.C.N. NO. | REVISION DESCRIPTION | REV BY | DATE | CHK BY | DATE | APPD BY | DATE |
|---|---|---|---|---|---|---|---|---|
| C | 15710 | (1)WAS QTY. 4, (2)ADDED ITEMS 19 & 20 | GLH | 22 04 | GLH | 22 04 | . | . |
| B | 15640 | (1) ITEM 18 ADDED; (2) ADDED "VM2" MODEL | KEN | 07-04 2003 | MLE | 07-07 2003 | JLW | 07-22 2003 |
| A | 15485 | ORIGINAL RELEASE | | | | | | |

SURFACE TREATMENT: NONE

HEAT TREATMENT: NONE

FIRST USED ON: B2 VM1 VM2

EXCEPT AS NOTED: ALL CORNERS MUST BE AS FOLLOWS
INSIDE: 1.3 X 45° OR 1.3 R MAX
OUTSIDE: 0.8 X 45° OR 1.3 R

EXCEPT AS NOTED: ALL DIMENSIONS IN METRIC TOLERANCE
DECIMAL: .0 ±0.8; .00 ±0.4; .000 ±0.13; .0000 ±0.013; ANGULAR ±0°30'

EXCEPT AS NOTED: WELDING TOLERANCE MUST BE AS FOLLOWS ±3

THIRD ANGLE PROJECTION

HURCO

HURCO COMPANIES, INC
INDIANAPOLIS, IN. U.S.A.

DESCRIPTION: ASS'Y, ENCLOSURE DOOR SWITCH

| DRAWN | DATE | CHECKED | DATE | APPROVED | DATE |
|---|---|---|---|---|---|
| ROD | 7-04-02 | MLE | 7-08-02 | JLW | 10-07-03 |

| SCALE | SIZE | DRAWING | SHT. | REV. |
|---|---|---|---|---|
| 1:5 | C | 003-0107-002EX | 1 OF 1 | C |

UNIT OF MEAS.: PC

# Ass'y., Cylinder, Unclamp, 003-1003-001—Rev. C

| SIZE | DRAWING | SHT. | REV. | PROPRIETARY INFORMATION |
|---|---|---|---|---|
| D | 003-1003-001EX | 1 OF 1 | C | INFORMATION CONTAINED HEREIN IS THE PROPERTY OF HURCO COMPANIES, INC. NO REPRODUCTION OR DISCLOSURE OF THIS INFORMATION SHALL BE MADE BY THE RECIPIENT TO ANY OTHER PERSON OR ORGANIZATION WITHOUT THE PRIOR WRITTEN CONSENT OF HURCO COMPANIES, INC. |

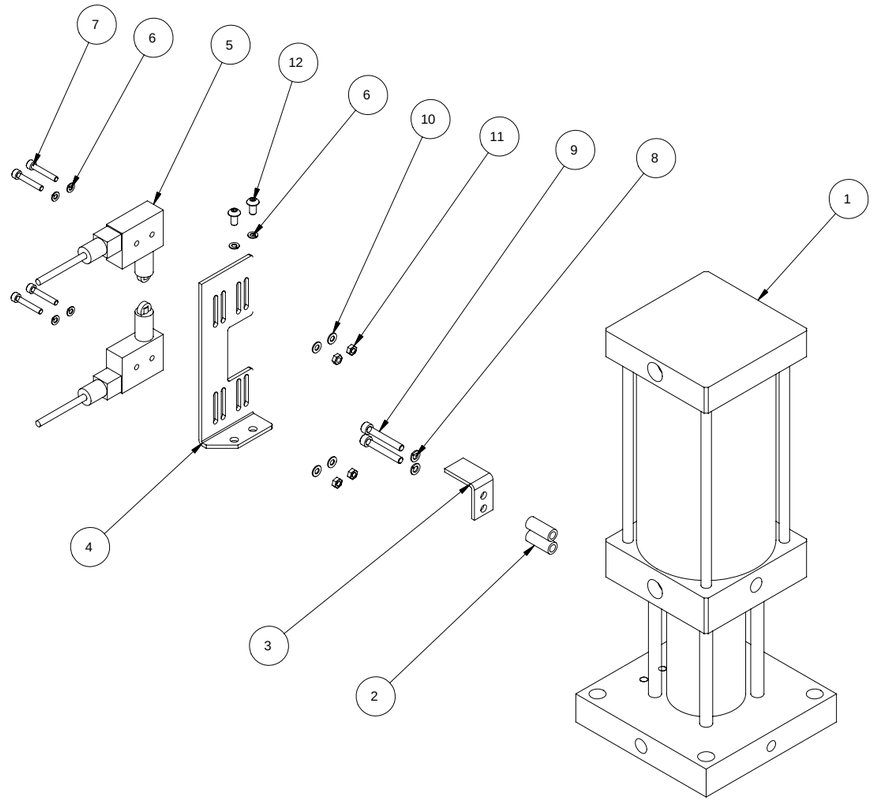


| ITEM | QTY. | PART NO. | DESCRIPTION |
|---|---|---|---|
| 12 | 2 | 108-5003-003 | BHSCS, M 5 X 0.8 P X 10 LG |
| 11 | 4 | 117-5011-001 | NUT, HEX M4 X 0.7 P |
| 10 | 4 | 110-5001-002 | WASHER, FLAT, M4 |
| 9 | 2 | 101-5007-010 | SHCS, M 5 X 0.8 P X 35 LG |
| 8 | 2 | 110-0046-006 | LOCKWASHER, M5, HELICAL SPRING |
| 7 | 4 | 101-5021-010 | SHCS, M 4 X 0.7 P X 25 LG |
| 6 | 6 | 110-0046-005 | LOCKWASHER, M4, HELICAL SPRING |
| 5 | 2 | 404-5202-035 | SWITCH, LIMIT |
| 4 | 1 | 803-1002-151 | BRKT, MOUNTING, SWITCH |
| 3 | 1 | 803-1020-007 | DOG, SWITCH, LIMIT |
| 2 | 2 | 803-1042-042 | STANDOFF, DOG, SWITCH |
| 1 | 1 | 501-1201-005 | CYLINDER, BOOSTER |

| REV | E.C.N. NO. | REVISION DESCRIPTION | REV BY | DATE | CHK BY | DATE | APPD BY | DATE |
|---|---|---|---|---|---|---|---|---|
| C | 15414 | REDRAWN IN SOLID WORKS-NO CHANGES | JAS | 2-26-02 | JAS | 2-26-02 | JAS | 2-26-02 |
| B | 15206 | | | | | | | |
| A | 14718 | ORIGINAL RELEASE | | | | | | |

SURFACE TREATMENT: NONE

HEAT TREATMENT: NONE

FIRST USED ON: BMC30

EXCEPT AS NOTED: ALL CORNERS MUST BE AS FOLLOWS
INSIDE: 1.3 X 45° OR 1.3 R MAX
OUTSIDE: 0.8 X 45° OR 1.3 R

EXCEPT AS NOTED: ALL DIMENSIONS IN METRIC TOLERANCE
DECIMAL: .0 ±0.8, .00 ±0.4, .000 ±0.13, .0000 ±0.013
ANGULAR ±1°30'

EXCEPT AS NOTED: WELDING TOLERANCE MUST BE AS FOLLOWS
±3

HURCO COMPANIES, INC.
INDIANAPOLIS, IN U.S.A.

DESCRIPTION: ASS'Y, CYLINDER, UNCLAMP

| DRAWN | DATE | CHECKED | DATE | APPROVED | DATE |
|---|---|---|---|---|---|
| SAD | 9/21/99 | JAS | 9/23/99 | | |

| SCALE | SIZE | DRAWING | SHT. | REV. |
|---|---|---|---|---|
| 1:2 | D | 003-1003-001EX | 1 OF 1 | C |

UNIT OF MEAS.: PC

| SIZE | DRAWING | SHT. | REV. |
|---|---|---|---|
| D | 003-1015-027 | 1 OF 2 | C |

PROPRIETARY INFORMATION

INFORMATION CONTAINED HEREIN IS THE PROPERTY OF HURCO COMPANIES, INC. NO REPRODUCTION OR DISCLOSURE OF THIS INFORMATION SHALL BE MADE BY THE RECIPIENT TO ANY OTHER PERSON OR ORGANIZATION WITHOUT THE PRIOR WRITTEN CONSENT OF HURCO COMPANIES, INC.

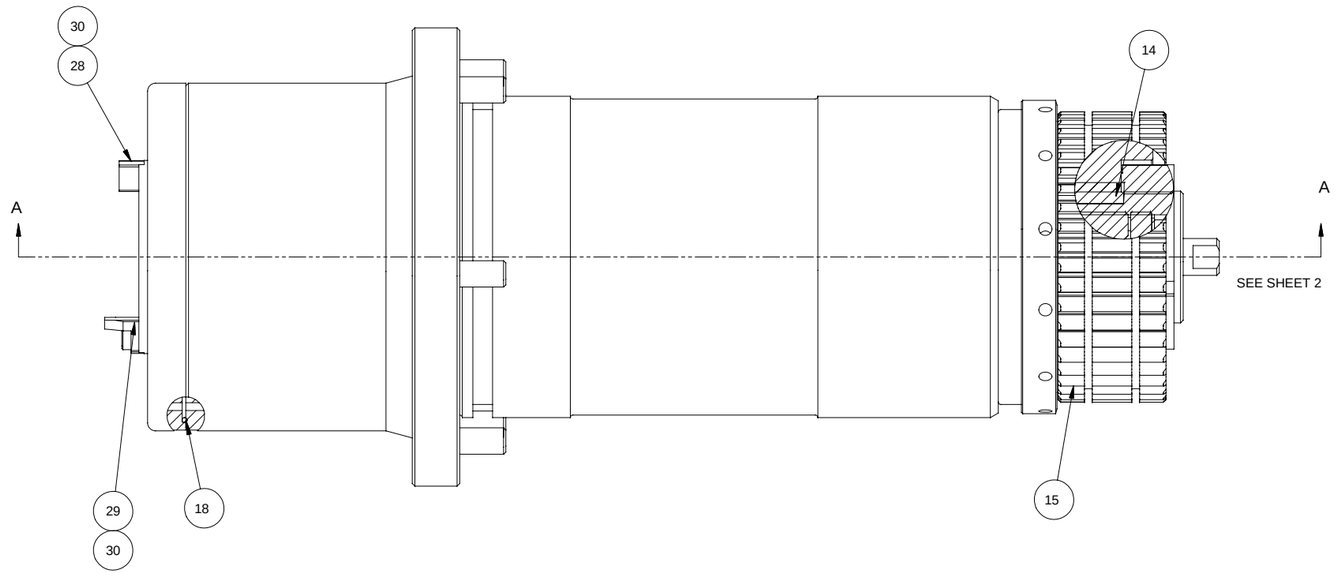


1/4" PT AIR PURGE CONNECTION FOR SET-UP PURPOSES. USE A LOW PRESSURE GAGE WITH A TEE FITTING. CONNECT ONE LEG OF THE TEE TO FILTER/REGULATOR AIR SUPPLY AND ADJUST PRESSURE TO READ 2 TO 4 PSI MIN ON THE SET-UP GAGE. REMOVE LOW PRESSURE GAGE TOGETHER WITH TEE AND CONNECT AIR SUPPLY LINE PERMANENTLY.

| | QTY. | PART NO. | DESCRIPTION | ITEM |
|---|---|---|---|---|
| C | 6 | 101-5011-007 | SHCS, M10 X 1.5 P X 25 LG | 39 |
| | 4 | 110-0046-006 | LOCKWASHER, M5, HELICAL SPRING | 38 |
| | 4 | 101-5007-022 | SHCS, M 5 X 0.8 P X 16 LG | 37 |
| | 1 | 110-0046-012 | LOCKWASHER, M16, HELICAL SPRING | 36 |
| | 1 | 803-0107-004 | WHEEL, BALANCE | 35 |
| | 4 | 101-5008-004 | SHCS, M 6 X 1.0 P X 16 LG | 34 |
| | 1 | 803-0112-004 | SPACER, UPPER | 33 |
| | 1 | 803-0110-006 | RETAINER, SPINDLE BEARING UPPER | 32 |
| | 1 | 608-2003-091 | O-RING P26 | 31 |
| | 6 | 101-5007-003 | SHCS, M 5 X 0.8 P X 12 LG | 30 |
| | 1 | 803-1023-010 | KEY, SPINDLE NOSE DRIVE, RIGHT | 29 |
| | 1 | 803-1023-009 | KEY, SPINDLE NOSE DRIVE, LEFT | 28 |
| | 1 | 803-1013-004 | WASHER, DISK SPRING | 27 |
| | 1 | 803-1010-006 | NUT, SPINDLE | 26 |
| | 1 | 219-0002-009 | BUSHING, 14 X 16 X 10 mm | 25 |
| | 1 | 803-1010-005 | NUT, DRAWBAR | 24 |
| | 1 | 608-2003-066 | O-RING | 23 |
| | 1 | 803-1042-037 | SPACER, DISK SPRING | 22 |
| | 6 | 101-5007-006 | SHCS, M 5 X 0.8 P X 20 LG | 21 |
| | 1 | 117-1004-003 | NUT, PRECISION | 20 |
| | 1 | 803-1070-002 | COLLET, TOOL RETENTION | 19 |
| | 1 | 608-2003-013 | O-RING, 9.0 X 12.0 X 1.9 mm | 18 |
| | 1 | 803-1042-036 | SPACER, FRONT | 17 |
| | 1 | 117-1004-002 | NUT, PRECISION | 16 |
| | 1 | 803-1046-029 | PULLEY, SPINDLE, 44T | 15 |
| B | 2 | 803-1023-006 | KEY, SPINDLE PULLEY | 14 |
| | 2 | 211-0087-058 | NUT, SPINDLE HOUSING | 13 |
| | 2 | 211-0001-033 | BEARING | 12 |
| | 1 | 803-1054-007 | CARTRIDGE, SPINDLE | 11 |
| | 1 | 803-1016-008 | SHAFT, SPINDLE | 10 |
| | 1 | 803-1065-004 | DRAWBAR, TOOL RETENTION | 9 |
| | 74 | 713-0020-840 | DISK SPRING | 8 |
| | 1 | 803-1042-032 | SPACER , MIDDLE | 7 |
| | 2 | 211-0085-040 | BEARING, HSS7012E.T.P4S | 6 |
| | 1 | 803-1042-031 | SPACER, INNER | 5 |
| | 1 | 803-1042-030 | SPACER, OUTER | 4 |
| | 1 | 608-2003-049 | O-RING | 3 |
| | 1 | 803-1012-018 | RETAINER, SPINDLE BEARING, LOWER | 2 |
| | 6 | 101-5010-005 | SHCS, M 8 X 1.25 P X 20 LG | 1 |

NOTES:

1. TOOL RETENTION FORCE: 7 - 9 KN
2. TOOL RELEASE STROKE: 11.0 mm
3. SPRING STACK FREE HEIGHT: 180.75 mm
4. SPRING STACK WITH NO TOOL: 165.0 mm
5. EACH DISC SPRING TO BE COATED WITH APPROVED LUBRICANT. THE O.D. OF SPRING STACK & O.D. OF DRAWBAR SHAFT TO BE COATED WITH APPROVED LUBRICANT OR ANDOK-C GREASE.

| REV | E.C.N. NO. | REVISION DESCRIPTION | REV BY | DATE | CHK BY | DATE | APPD BY | DATE |
|---|---|---|---|---|---|---|---|---|
| C | 15583 | ADDED ITEM 39 | GLH | 04-9 2003 | PFB | 04-9 2003 | | |
| B | 15517 | ITEM 14 WAS QTY 1 | KEN | 08-19 2002 | MLE | 09-20 2002 | JLW | 10-09 2002 |
| A | 15483 | REL | | | | | | |

SURFACE TREATMENT: NONE

HEAT TREATMENT: NONE

FIRST USED ON: VM1

EXCEPT AS NOTED: ALL CORNERS MUST BE AS FOLLOWS INSIDE: 1.3 X 45° OR 1.3 R MAX OUTSIDE: 0.8 X 45° OR 1.3 R

EXCEPT AS NOTED: WELDING TOLERANCE MUST BE AS FOLLOWS ±1°

EXCEPT AS NOTED: ALL DIMENSIONS IN METRIC TOLERANCE DECIMAL: .0 ±0.8, .00 ±0.4, .000 ±0.13, .0000 ±0.013 ANGULAR ±0°30'

HURCO COMPANIES, INC. INDIANAPOLIS, IN U.S.A.

DESCRIPTION: ASS'Y, SPINDLE (10K)

| DRAWN | DATE | CHECKED | DATE | APPROVED | DATE |
|---|---|---|---|---|---|
| KEN | 06-22-02 | MLE | 06-25-02 | JLW | 09-09-02 |

| SCALE | SIZE | DRAWING | SHT. | REV. |
|---|---|---|---|---|
| 1:1 | D | 003-1015-027 | 1 OF 2 | C |

UNIT OF MEAS. PC

# Ass'y., Spindle (10K), 003-1015-027—Rev. C

| SIZE | DRAWING | SHT. | REV. |
|---|---|---|---|
| D | 003-1015-027 | 2 OF 2 | C |

PROPRIETARY INFORMATION

INFORMATION CONTAINED HEREIN IS THE PROPERTY OF HURCO COMPANIES, INC. NO REPRODUCTION OR DISCLOSURE OF THIS INFORMATION SHALL BE MADE BY THE RECIPIENT TO ANY OTHER PERSON OR ORGANIZATION WITHOUT THE PRIOR WRITTEN CONSENT OF HURCO COMPANIES, INC.

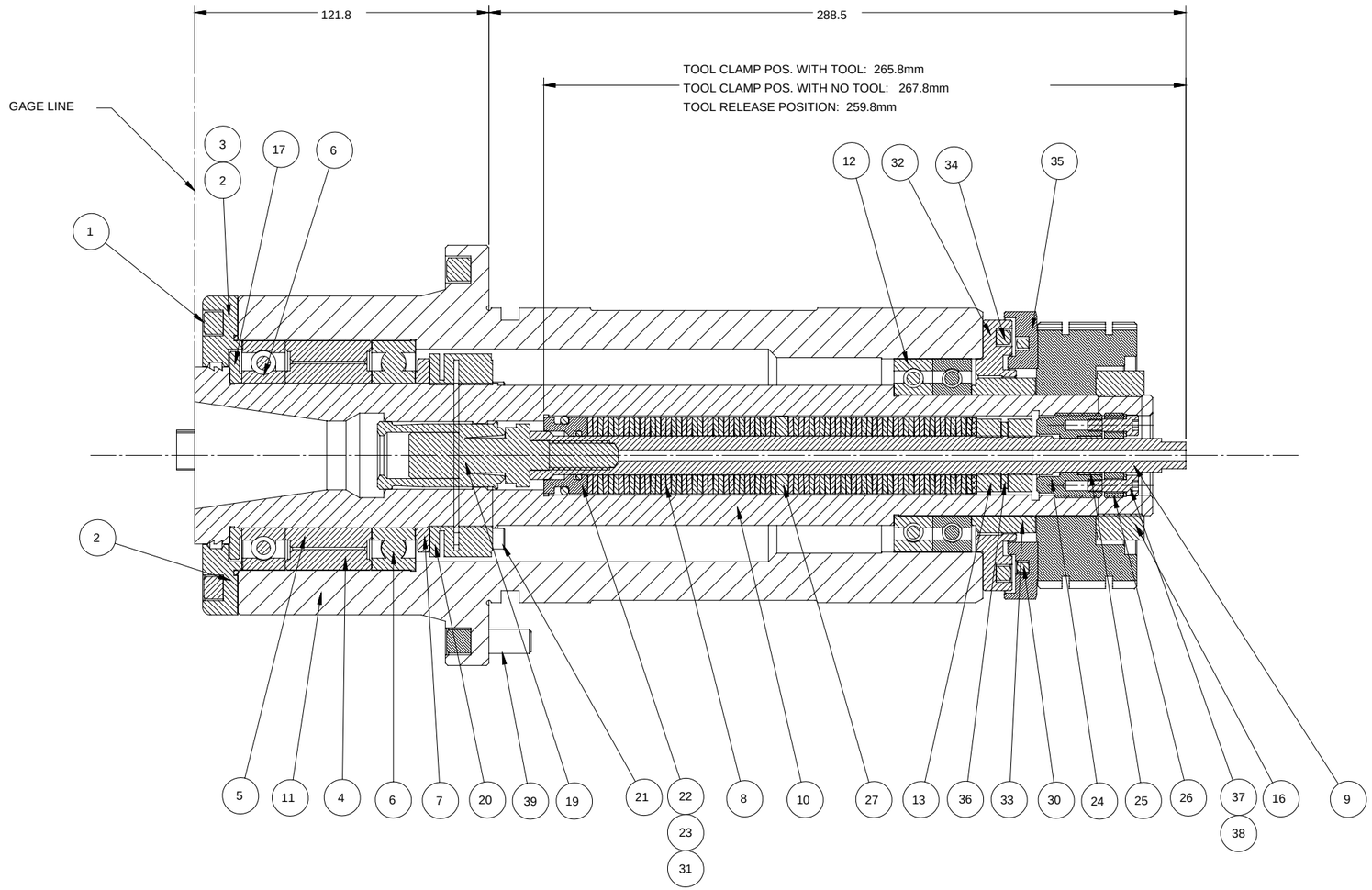


SECTION A-A
FROM SHEET 1

| REV | E.C.N. NO. | REVISION DESCRIPTION | REV BY | DATE | CHK BY | DATE | APPD BY | DATE |
|---|---|---|---|---|---|---|---|---|
| A | 15483 | REL | | | | | | |

SURFACE TREATMENT: NONE

HEAT TREATMENT: NONE

FIRST USED ON: VM1

EXCEPT AS NOTED: ALL CORNERS MUST BE AS FOLLOWS
INSIDE: 1.3 X 45° OR 1.3 R MAX
OUTSIDE: 0.8 X 45° OR 1.3 R

EXCEPT AS NOTED: WELDING TOLERANCE MUST BE AS FOLLOWS ±3°

EXCEPT AS NOTED: ALL DIMENSIONS IN METRIC TOLERANCE
DECIMAL
.0 ±0.8
.00 ±0.4
.000 ±0.13
.0000 ±0.013
ANGULAR ±0°30'

HURCO COMPANIES, INC.
INDIANAPOLIS, IN U.S.A.

DESCRIPTION: ASS'Y, SPINDLE (10K)

| DRAWN | DATE | CHECKED | DATE | APPROVED | DATE |
|---|---|---|---|---|---|
| KEN | 06-22-02 | MLE | 06-25-02 | JLW | 09-09-02 |

SCALE: 1:1
UNIT OF MEAS.: PC
SIZE: D
DRAWING: 003-1015-027
SHT.: 2 OF 2
REV.: C

PARTS LIST

| QTY. | PART NUMBER | ITEM DESCRIPTION | ITEM |
|---|---|---|---|

# Electrical Cabinet and Control Drawings

## Hurco VM1 Machining Center


Ass'y., Comm Port w/CDRom & USB Port, .002-4421-012—Rev. A . . . . Page 2 - 2

Ass'y., Electrical Cabinet, VM1, Edit II, . . .003-1007-048—Rev. F . . . . Page 2 - 3

Ass'y., Electrical Cabinet, VM1, Edit II, . . .003-1007-049—Rev. F . . . . Page 2 - 3

Ass'y., Electrical Cabinet, VM1, Edit II, . . .003-1007-050—Rev. F . . . . Page 2 - 3

Ass'y., Electrical Cabinet, VM1, Edit II, . . .003-1007-059—Rev. F . . . . Page 2 - 3

Ass'y., Console, Max, . . . . . .007-0012-003—Rev. D . . . . Page 2 - 7

Ass'y., C/C, S7, SVGA, CNC++VT, 44 I/O,..007-3002-011—Rev. T . . . . Page 2 - 8

Ass'y., C/C, S7, DVGA, CNC++VT, 44 I/O, 007-3002-012—Rev. T . . . . Page 2 - 8

Ass'y., C/C, S370, SVGA, OCV 5 CH.,
44 I/O, . . . . . .007-3002-030—Rev. T . . . . Page 2 - 8

Ass'y., C/C, S7, SVGA, XMP, 44 I/O,
3 I/0 Slots, . . . . . .007-3002-034—Rev. A . . . . Page 2 - 9

Ass'y., C/C, S7, DVGA, XMP, 44 I/O,
3 I/0 Slots, . . . . . .007-3002-035—Rev. A . . . . Page 2 - 9

Ass'y., C/C, S370, SVGA, XMP, 44 I/O,
3 I/0 Slots, . . . . . .007-3002-036—Rev. A . . . . Page 2 - 9

Ass'y., Dual TFT Flat Panel Console, . . . . .007-3004-005—Rev. D . . . . Page 2 - 10

Control Kit, Max 4 TFT, . . . . . .007-3005-018—Rev. H . . . . Page 2 - 11

Kit, Max Control, . . . . . .007-3005-054—Rev. C . . . . Page 2 - 12

Kit, Max S370 OCV-5CH 44 IO ASF, . . . . .007-3005-056—Rev. C . . . . Page 2 - 13

Control Kit, DSM, S7, SYNQNET, 1RMB,
44 I/O, . . . . . .007-3005-058—Rev. A . . . . Page 2 - 14

Control Kit, Max, S7, SYNQNET, 1RMB,
44 I/O, . . . . . .007-3005-059—Rev. A . . . . Page 2 - 15

Control Kit, Max, ASF, SYNQNET, 1RMB,
44 I/O, . . . . . .007-3005-061—Rev. A . . . . Page 2 - 16

Ass'y., Dual TFT Flat Panel Display, . . . . .007-3015-002—Rev. D . . . . Page 2 - 17

Ass'y., Dual Flat Panel PEK, . . . . . .007-3016-001—Rev. C . . . . Page 2 - 20

Ass'y., Detented Jog, . . . . . .007-3017-001—Rev. D . . . . Page 2 - 21

| SIZE | DRAWING | SHT. | REV. |
|---|---|---|---|
| C | 002–4421–012 | 1 OF 1 | A |

PROPRIETARY INFORMATION
INFORMATION CONTAINED HEREIN IS THE PROPERTY OF HURCO MANUFACTURING COMPANY, INC. NO REPRODUCTION OR DISCLOSURE OF THIS INFORMATION SHALL BE MADE BY THE RECIPIENT TO ANY OTHER PERSON OR ORGANIZATION WITHOUT THE PRIOR WRITTEN CONSENT OF HURCO MANUFACTURING COMPANY, INC.

NOTES:

1. MOUNT MALE CONNECTOR TO PANEL.
2. M4 NUTS & LOCKWASHERS USED TO SECURE BLANKING PLATE TO COMM PANEL.
3. PLACE M4 FLAT WASHER BETWEEN COMM PANEL & CDROM BLANKING PLATE TO PREVENT GASKET DISTORTION.

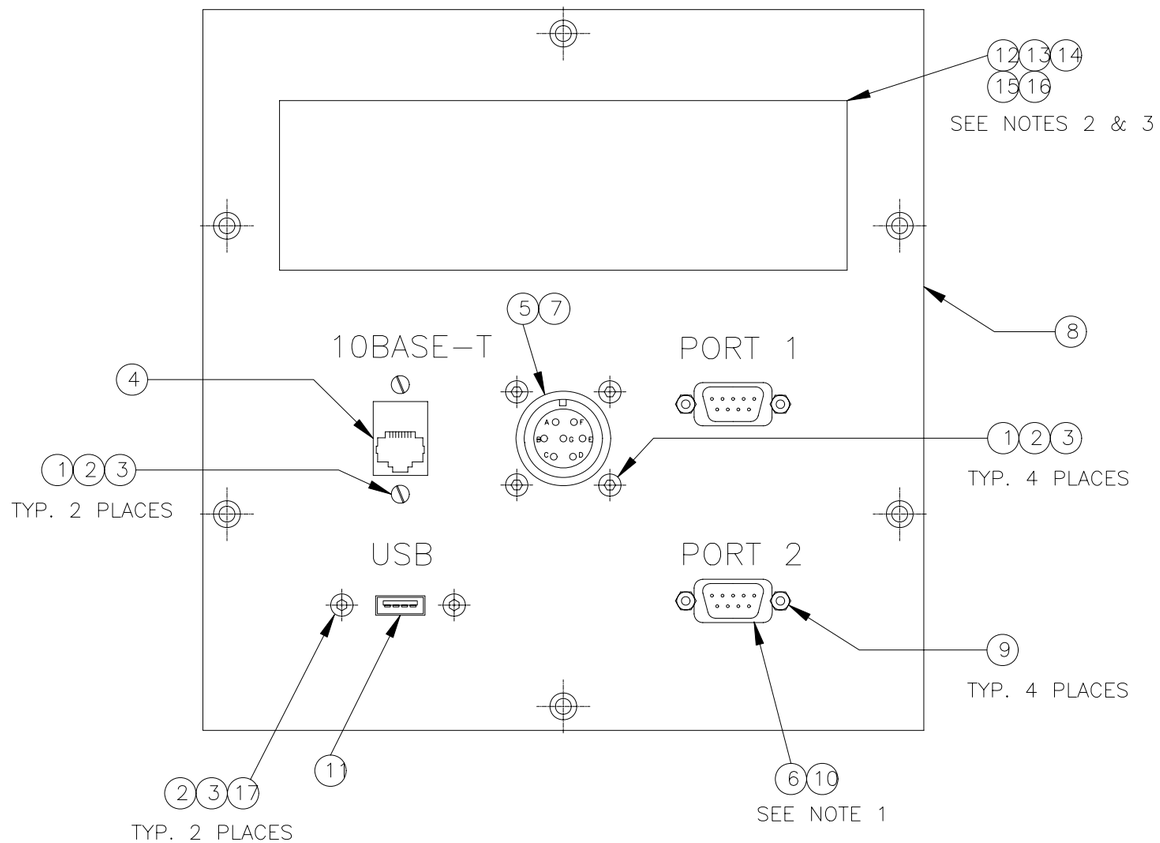


| QTY | PART NUMBER | ITEM DESCRIPTION | ITEM |
|---|---|---|---|
| 2 | 108–5001–003 | BHSCS, M3 X 10 LG | 17 |
| 4 | 110–5001–002 | WASHER, FLAT M4 | 16 |
| 4 | 110–0066–006 | LOCKWASHER, M4 EXT TOOTH | 15 |
| 4 | 117–5011–001 | NUT, M4 HEX | 14 |
| 1 | 410–4001–029 | PLATE, CDROM BLANKING | 13 |
| 1 | 807–0023–002 | GASKET, CDROM BEZEL | 12 |
| 1 | 423–4401–968 | HARNESS, USB TYPE A M–F, 3000mm | 11 |
| 2 | 423–4405–080 | HARNESS, SHIELDED RS232C PORT | 10 |
| 4 | 110–0134–051 | THREADED STANDOFF 1/4"OD, NO. 4–40, LG. 3/16" | 9 |
| 1 | 802–2700–029 | PANEL, COMM PORT W/ CDROM & USB PORT | 8 |
| 1 | 423–4405–094 | HARNESS, INDEXER PORT | 7 |
| 2 | 406–0961–023 | DUST CAP, DB–9 PINS | 6 |
| 1 | 406–0961–003 | CAP, MS25043–16D | 5 |
| 1 | 406–0804–047 | CONNECTOR, RJ45–BULKHEAD | 4 |
| 8 | 117–5009–001 | HEX NUT, M3 X .5 | 3 |
| 8 | 110–0066–004 | LOCKWASHER, M3 EXTERNAL | 2 |
| 6 | 108–5001–002 | BHSCS, M3 X 8 LG | 1 |

PARTS LIST

| REV | E.C.N. NO. | REVISION DESCRIPTION | REV BY | DATE | CHK BY | DATE | APPD BY | DATE | DF |
|---|---|---|---|---|---|---|---|---|---|
| A | 15745 | RELEASE | | | | | | | |

SURFACE TREATMENT

HEAT TREATMENT

FIRST USED ON
TM6

EXCEPT AS NOTED:
ALL DIMENSIONS IN METRIC
TOLERANCE DECIMAL
.0 ±0.8
.00 ±0.4
.000 ±0.13
.0000 ±0.013
ANGULAR ± 0°30'
BREAK ALL SHARP EDGES

THIRD ANGLE PROJECTION

HURCO MANUFACTURING COMPANY, INC.
INDIANAPOLIS, IN U.S.A.

DESCRIPTION
ASSY, COMM PORT W/ CDROM & USB PORT

| DRAWN | DATE | CHECKED | DATE | APPROVED | DATE |
|---|---|---|---|---|---|
| WCM | 04JUN04 | DEO | 07JUN04 | DEO | 07JUN04 |

| SCALE | SIZE | DRAWING | SHT. | REV. |
|---|---|---|---|---|
| NONE | C | 002–4421–012 | 1 OF 1 | A |

UNIT OF MEAS
PC

# Ass'y., Electrical Cabinet, VM1, Edit II, 003-1007-048, 003-1007-049, 003-1007-050, 003-1007-059—Rev. F

| SIZE | DRAWING | SHT. | REV. |
|---|---|---|---|
| D | 003-1007-048<br>003-1007-049<br>003-1007-050<br>003-1007-059 | 1 OF 4 | F |

PROPRIETARY INFORMATION
INFORMATION CONTAINED HEREIN IS THE PROPERTY OF HURCO MANUFACTURING COMPANY, INC. NO REPRODUCTION OR DISCLOSURE OF THIS INFORMATION SHALL BE MADE BY THE RECIPIENT TO ANY OTHER PERSON OR ORGANIZATION WITHOUT THE PRIOR WRITTEN CONSENT OF HURCO MANUFACTURING COMPANY, INC.

NOTES:
1) ITEMS 55, 82–121, 146 & 160–164 ARE NOT DELINEATED.
2) ITEMS 28, 29, 30, 31, 32, 48, 49, 50, 159 ARE PART OF THE HURCO CONTROL KIT.
3) ITEMS 3, 7 ARE PART OF THE YASKAWA DRIVE KIT, REFER TO 002–4101–166.
4) VM1/VMX1 EDITION II HAS Z–AXIS MOTOR BRAKE (I.E., NO COUNTERBALANCE)
5) ITEM 12, 153 ARE PART OF THE YASKAWA INVERTER KIT, REFER TO 002–4101–182.

| QTY. –059 DSM NCE | QTY. –050 DSM CE | QTY. –049 MAX CE | QTY. –048 MAX NCE | PART NUMBER | ITEM DESCRIPTION | ITEM |
|---|---|---|---|---|---|---|
| 2 | 2 | 2 | 2 | 407–0041–022 | RESISTOR, 27.2 OHMS, 1200 WATTS, STAND TYPE | 165 |
| 1 | 1 | 1 | 1 | 423–4405–260 | HARNESS, UNCLAMP/PURGE/BLR SOL | 164 |
| 1 | 1 | 1 | 1 | 423–4405–259 | HARNESS, SPINDLE HEAD I/O SIGNAL | 163 |
| 2 | 2 | 2 | 2 | 406–1663–006 | HARNESS, RJ45 SHLD, CAT5E 5' | 162 |
| 1 | 1 | 1 | 1 | 423–4401–993 | HARNESS, DC POWER | 161 |
| | | | | | | 160 |
| 1 | 1 | 1 | 1 | 007–5002–001 | ASSY, RMB MODULE 4M–1E | 159 |
| 1 | 1 | 1 | 1 | 108–5002–003 | BHSCS, M4 X 0.7P X 12 LG. | 158 |
| 1 | 1 | 1 | 1 | 803–0202–033 | COVER, INVERTER RESISTOR | 157 |
| 1 | 1 | 1 | 1 | 404–9081–088 | SWITCH, CONT DISCONNECT, SA53C–40A, FUJI | 156 |
| 4 | 4 | 4 | 4 | 108–5004–002 | BHSCS, M6 X 1.0P X 12.0 LG | 155 |
| 1 | 1 | 1 | 1 | 409–1001–264 | FUSE, 5 X 20MM, 2 AMP | 154 |
| 1 | 1 | 1 | 1 | 402–6009–266 | MC5 PG–X2 CARD | 153 |
| | | | | | | 152 |
| 2 | 2 | 2 | 2 | 608–0020–005 | GASKET, COVER, VM1 CABINET | 151 |
| 2 | 2 | 2 | 2 | 803–0102–038 | COVER, CABINET, VM1 | 150 |
| 4 | 4 | 4 | 4 | 102–5001–002 | FHSCS, M3 X 0.5P X 8.0 LG. | 149 |
| 2 | 2 | 2 | 2 | 423–4401–822 | HARNESS, WORKLIGHT RECEPTACLE | 148 |
| 1 | 1 | 1 | 1 | 406–4002–008 | BAR, GROUNDING, 8 POS. | 147 |
| 1 | 1 | – | – | 423–4401–791 | HARNESS, MAIN DISCONNECT WITH TRANSFORMER | 146 |
| | | | | | | 145 |
| | | | | | | 144 |
| 1 | 1 | 1 | 1 | 703–1005–614 | LABEL, FUSE MAP, SMARTMILL | 143 |
| 2 | 2 | 2 | 2 | 803–1042–055 | SPACER, CABINET DOOR BAR | 142 |
| 4 | 4 | 4 | 4 | 409–1001–257 | FUSE, 4A, S.B. | 141 |
| | | | | | | 140 |
| 1 | 1 | 1 | 1 | 413–0003–152 | TRANSFORMER, TOROIDAL DUAL OUTPUT 500VA | 139 |
| 1 | 1 | 1 | 1 | 003–6010–004 | ASS'Y, TERMINAL BLOCK, AC POWER | 138 |
| 4 | 4 | 4 | 4 | 101–5021–005 | SHCS, M4 X 0.7 P X 12.0 LG | 137 |
| | | | | | | 136 |
| 1 | 1 | 1 | 1 | 403–2501–006 | RELAY, TIME DELAY CONTACT MODULE | 135 |
| | | | | | | 134 |
| | | | | | | 133 |
| | | | | | | 132 |
| 1 | 1 | 1 | 1 | 406–4002–007 | BAR, GROUNDING, 20 POS. | 131 |
| 1 | 1 | 1 | 1 | 402–0003–016 | REVERSING, SWITCH WIRING UNIT | 130 |
| | | | | | | 129 |
| 2 | 2 | 2 | 2 | 408–8003–057 | GRIP, CORD CG20 (6MM–13MM) | 128 |
| 1 | 1 | 1 | 1 | 408–8003–062 | GRIP, CORD CG32 (16MM–22MM) | 127 |
| 1 | 1 | 1 | 1 | 002–2250–001 | ASS'Y, WRIST STRAP STATIC CONTROL | 126 |
| 22 | 22 | 22 | 22 | 117–5012–001 | NUT, HEX M5 X 0.8P | 125 |
| | | | | | | 124 |
| 2 | 2 | 2 | 2 | 117–5011–001 | NUT, HEX M4 X 0.7P | 123 |
| 12 | 15 | 15 | 12 | 417–0001–047 | SUPPRESSOR + INDICATOR DIODE MODULE | 122 |
| 1 | 1 | 1 | 1 | 423–4401–734 | HARNESS, ATC AIR RELIEF | 121 |
| 1 | 1 | 1 | 1 | 423–4401–735 | HARNESS, ATC CW / CCW MOTOR POWER | 120 |
| 1 | 1 | 1 | 1 | 423–4401–731 | HARNESS, IOIF J1 | 119 |
| 1 | 1 | 1 | 1 | 423–4401–730 | HARNESS, DCIO J2 | 118 |
| 1 | 1 | 1 | 1 | 423–4401–729 | HARNESS, DCIO J1 | 117 |
| 1 | 1 | 1 | 1 | 423–4401–736 | HARNESS, DISK ATC | 116 |
| 1 | 1 | 1 | 1 | 423–4401–737 | HARNESS, DC POWER | 115 |
| 1 | 1 | 1 | 1 | 423–4401–996 | HARNESS, RMB, IOIF J2 | 114 |
| 1 | 1 | 1 | 1 | 423–4401–738 | HARNESS, SPINDLE MOTOR FAN | 113 |
| 1 | 1 | 1 | 1 | 423–4401–739 | HARNESS, WAYLUBE MOTOR | 112 |
| 1 | 1 | 1 | 1 | 423–4401–740 | HARNESS, XX" IEC FEM POWER | 111 |
| 1 | 1 | 1 | 1 | 423–4401–741 | HARNESS, AIR PRESSURE | 110 |
| | | | | | | 109 |
| | | | | | | 108 |
| | | | | | | 107 |
| | | | | | | 106 |
| 1 | 1 | 1 | 1 | 423–4401–955 | HARNESS, SPINDLE HEAD SWS, VM1 | 105 |
| | | | | | | 104 |
| | | | | | | 103 |
| 1 | 1 | 1 | 1 | 423–4401–749 | HARNESS, SPINDLE HEAD FAN | 102 |
| 1 | 1 | 1 | 1 | 423–4401–750 | HARNESS, PREPARE FOR CHIP AUGER | 101 |
| 1 | 1 | 1 | 1 | 423–4401–751 | HARNESS, PREPARE FOR FLOOD PUMP | 100 |
| 1 | 1 | 1 | 1 | 423–4401–752 | HARNESS, TRANSFORMER 230V PRIMARY | 99 |
| 1 | 1 | 1 | 1 | 423–4401–753 | HARNESS, X–AXIS LIMIT SWITCH | 98 |
| 1 | 1 | 1 | 1 | 423–4401–754 | HARNESS, Y–AXIS LIMIT SWITCH | 97 |
| 1 | 1 | 1 | 1 | 423–4401–755 | HARNESS, Z–AXIS LIMIT SWITCH | 96 |
| 1 | 1 | 1 | 1 | 423–4401–756 | HARNESS, X–AXIS, 1CN TO MX4/TB1 | 95 |
| 1 | 1 | 1 | 1 | 423–4401–757 | HARNESS, Y–AXIS, 1CN TO MX4/TB1 | 94 |
| 1 | 1 | 1 | 1 | 423–4401–866 | HARNESS, Z–AXIS, 1CN TO MX4/TB1 | 93 |
| 1 | 1 | 1 | 1 | 423–4401–759 | HARNESS, SPINDLE MOTOR ENCODER | 92 |
| 1 | 1 | 1 | 1 | 423–4401–760 | HARNESS, X–AXIS MOTOR ENCODER | 91 |
| 1 | 1 | 1 | 1 | 423–4401–761 | HARNESS, Y–AXIS MOTOR ENCODER | 90 |
| 1 | 1 | 1 | 1 | 423–4401–762 | HARNESS, Z–AXIS MOTOR ENCODER | 89 |
| – | – | 1 | 1 | 423–4401–763 | HARNESS, MAIN DISCONNECT | 88 |
| 1 | 1 | 1 | 1 | 423–4401–764 | HARNESS, X–AXIS MOTOR POWER | 87 |
| 1 | 1 | 1 | 1 | 423–4401–765 | HARNESS, Y–AXIS MOTOR POWER | 86 |
| 1 | 1 | 1 | 1 | 423–4401–865 | HARNESS, Z–AXIS MOTOR POWER | 85 |
| 1 | 1 | 1 | 1 | 423–4401–767 | HARNESS, SPINDLE MOTOR POWER | 84 |
| 1 | 1 | 1 | 1 | 423–4401–768 | HARNESS, MX4 TO SPINDLE DRIVE | 83 |
| 1 | 1 | 1 | 1 | 423–4401–997 | HARNESS, SPINDLE I/O | 82 |
| 12 | 15 | 15 | 12 | 403–5001–020 | SOCKET, MINIATURE RELAY, DIN RAIL MOUNT | 81 |
| 1 | 1 | 1 | 1 | 402–0003–017 | CONTACTOR, 3–POLE, 24VDC COIL, 3RT1025–1BB40 | 80 |
| 2 | 2 | 2 | 2 | 402–0003–014 | CONTACTOR, 3–POLE, 24VDC COIL W/SURGE SUPPRESSION | 79 |
| 4 | 4 | 4 | 4 | 406–4005–301 | TERMINAL BLOCK, 4–COND, ORANGE | 78 |
| 3 | 3 | 3 | 3 | 402–0004–003 | INTERFACE MODULE, DIN DB37M, TERMINAL | 77 |
| 23 | 23 | 23 | 23 | 406–4006–048 | JUMPER BAR, HORIZONTAL | 76 |
| 1 | 1 | 1 | 1 | 417–6001–031 | SUPPRESSOR, RC NETWORK | 75 |
| 4 | 4 | 4 | 4 | 406–4005–344 | TERMINAL, RAIL MOUNT FUSE BLOCK | 74 |
| 2 | 2 | 2 | 2 | 406–4006–086 | END PLATE, 2–COND, GRAY | 73 |
| 21 | 21 | 21 | 21 | 406–4005–294 | TERMINAL BLOCK, 2–COND, GRAY | 72 |
| 3 | 3 | 3 | 3 | 406–4006–088 | END PLATE, 4–COND, GRAY | 71 |
| 2 | 2 | 2 | 2 | 406–4005–304 | TERMINAL BLOCK, 4–COND, GROUND | 70 |
| 11 | 11 | 11 | 11 | 406–4005–300 | TERMINAL BLOCK, 4–COND, BLUE | 69 |
| 17 | 17 | 17 | 17 | 406–4005–299 | TERMINAL BLOCK, 4–COND, GRAY | 68 |
| 835mm | 835mm | 835mm | 835mm | 408–0207–019 | WIRE DUCT, 33.0 X 100.0 MM | 67 |
| 1 | 1 | 1 | 1 | 403–5502–052 | CONTACTOR, 3–POLE, 24VDC COIL, 32A | 66 |
| 1 | 1 | 1 | 1 | 409–2001–060 | FUSE HOLDER, 1–POLE, CLASS CC SERIES | 65 |
| 2 | 2 | 2 | 2 | 409–2001–061 | FUSE HOLDER, 2–POLE, CLASS CC SERIES | 64 |
| 2 | 2 | 2 | 2 | 409–2001–062 | FUSE HOLDER, 3–POLE, CLASS CC SERIES | 63 |
| 9 | 9 | 9 | 9 | 712–0003–003 | SADDLE, TIE MOUNT | 62 |
| 1 | 1 | 1 | 1 | 406–4006–045 | END PLATE, FUSE, GRAY 282–311 | 61 |
| 1 | 1 | 1 | 1 | 403–5503–033 | RELAY, OVERLOAD 1.4–2.0A | 60 |
| 14 | 14 | 14 | 14 | 406–4006–002 | END STOP, GRAY | 59 |
| 1 | 1 | 1 | 1 | 403–2001–061 | RELAY, AUXILIARY CONTACT BLOCK, 2–POLE | 58 |
| 2 | 2 | 2 | 2 | 417–6001–029 | COIL SUPPRESSOR MODULE, SNAP–ON 24VDC | 57 |
| 1 | 1 | 1 | 1 | 002–4421–012 | ASSY COMM PORT w/CDROM & USB PORT | 56 |
| – | 1 | 1 | – | 423–4401–733 | HARNESS, DOOR INTERLOCK | 55 |
| 2 | 2 | 2 | 2 | 101–5008–004 | SHCS, M6 X 1.0 P X 16 LG | 54 |
| 1 | 1 | 1 | 1 | 703–1005–577 | LABEL, GROUND SYMBOL | 53 |
| 370mm | 370mm | 370mm | 370mm | 408–0207–013 | WIRE DUCT, 48.0 X 100.0 MM | 52 |
| 12 | 15 | 15 | 12 | 403–2001–054 | RELAY, MINIATURE, DPDT, 8A | 51 |
| 1 | 1 | 1 | 1 | 416–0003–010 | BUTTON HOLDER, SOFTWARE SECURITY | 50 |
| 1 | 1 | – | – | 007–3002–035 | ASS'Y, C/C, S7, DVGA, XMP, 44 I/O, 3 I/O SLOTS | 49 |
| – | – | 1 | 1 | 002–4403–038 | ASS'Y, SMARTMAX CONTROL I/F HARNESS | 48 |
| 3 | 3 | 3 | 3 | 408–8001–057 | PLUG, HOLE 19.0 MM DIA. | 47 |
| 10 | 10 | 10 | 10 | 108–5003–002 | BHSCS, M5 X 0.8 P X 12 LG | 46 |
| 1 | 1 | 1 | 1 | 803–1000–081 | PLATE, HARNESS MOUNTING LOWER | 45 |
| 3 | 3 | 3 | 3 | 409–1001–253 | FUSE, 10A, TIME DELAY | 44 |
| 6 | 6 | 6 | 6 | 110–0046–009 | LOCKWASHER, M10 HELICAL SPRING | 43 |
| 1 | 1 | 1 | 1 | 803–0114–006 | PANEL, ELECTRICAL CABINET | 42 |
| 6 | 6 | 6 | 6 | 110–5001–006 | WASHER, M10 FLAT | 41 |
| 6 | 6 | 6 | 6 | 110–5011–005 | SHCS, M10 X 1.5 P X 20 LG | 40 |
| 1 | 1 | 1 | 1 | 803–0117–007 | CABINET, ELECTRICAL | 39 |
| 1505mm | 1505mm | 1505mm | 1505mm | 406–4007–002 | RAIL, DIN | 38 |
| 10 | 10 | 10 | 10 | 110–5001–002 | WASHER, M4 FLAT | 37 |
| 10 | 10 | 10 | 10 | 110–0046–005 | LOCKWASHER, M4 HELICAL SPRING | 36 |
| 4 | 4 | 4 | 4 | 101–5021–010 | SHCS, M4 X 0.7 P X 25 LG | 35 |
| | | | | | | 34 |
| 1 | 1 | 1 | 1 | 803–1026–007 | PAWL, DOOR LOCKING | 33 |
| 1 | 1 | 1 | 1 | 712–0002–005 | BAG, 13" X 18" ZIPLOCK | 32 |
| 1 | 1 | 1 | 1 | 708–0001–013 | FOLDER, MAX3 SOFTWARE | 31 |
| 4 | 4 | 4 | 4 | 703–0010–003 | LABEL, BLANK DISKETTE | 30 |
| 4 | 4 | 4 | 4 | 427–0005–003 | DISK, FLOPPY BLANK 3.5" | 29 |
| 1 | 1 | 1 | 1 | 416–0003–009 | BUTTON, SOFTWARE SECURITY | 28 |
| 1 | 1 | 1 | 1 | 417–0001–003 | DIODE, IN4002 | 27 |
| 2" | 2" | 2" | 2" | 406–6481–001 | HEATSHRINK TUBING, 1/16" DIA | 26 |
| 2 | 2 | 2 | 2 | 803–0106–025 | BAR, DOOR LOCKING | 25 |
| 1 | 1 | 1 | 1 | 603–5001–017 | HANDLE, LIFT AND TURN DOOR | 24 |
| 3 | 3 | 3 | 3 | 409–1001–249 | FUSE, 25A TIME DELAY | 23 |
| | | | | | | 22 |
| – | – | 1 | 1 | 007–3002–034 | ASS'Y, C/C, S7, SVGA, XMP, 44 I/O, 3 I/O SLOTS | 21 |
| 1 | 1 | 1 | 1 | 409–1001–247 | FUSE, 6A TIME DELAY | 20 |
| 3 | 3 | 3 | 3 | 409–1001–263 | FUSE, 5 X 20MM, 1 AMP | 19 |
| 8 | 8 | 8 | 8 | 110–5001–004 | WASHER, M6 FLAT | 18 |
| 1 | 1 | 1 | 1 | 803–1002–269 | BRACKET, DISCONNECT MOUNTING | 17 |
| 1 | 1 | – | – | 002–4403–039 | ASS'Y, 105" ISA CNC/CONSOLE HARNESS | 16 |
| | | | | | | 15 |
| 1 | 1 | 1 | 1 | 407–0041–023 | RESISTOR, 20 OHMS, 500 WATTS, STAND TYPE | 14 |
| 28 | 28 | 28 | 28 | 109–5025–002 | PPHMS, M5 X 0.8 P X 8 LG | 13 |
| 1 | 1 | 1 | 1 | 402–6009–283 | F7 INVERTER, 200VAC, 11KW | 12 |
| 8 | 8 | 8 | 8 | 110–0046–007 | LOCKWASHER, M6 HELICAL SPRING | 11 |
| 8 | 8 | 8 | 8 | 101–5008–003 | SHCS, M6 X 1.0 P X 12 LG | 10 |
| 1 | 1 | 1 | 1 | 420–0003–015 | HEAT EXCHANGER, 110V, 5W/°C INTERNAL | 9 |
| 2 | 2 | 2 | 2 | 407–0041–017 | RESISTOR, 30 OHMS, 100 WATTS | 8 |
| 2 | 2 | 2 | 2 | 402–6009–209 | SGDH AMP, 1.0KW, 200V | 7 |
| 10 | 10 | 10 | 10 | 406–4006–006 | MARKING, HORIZONTAL, 11–20 | 6 |
| 10 | 10 | 10 | 10 | 406–4006–005 | MARKING, HORIZONTAL, 1–10 | 5 |
| 50 | 50 | 50 | 50 | 110–0046–006 | LOCKWASHER, M5 HELICAL SPRING | 4 |
| 1 | 1 | 1 | 1 | 402–6009–199 | SGDH AMP, 2.0 KW, 200V | 3 |
| 43 | 43 | 43 | 43 | 110–5001–003 | WASHER, M5 FLAT | 2 |
| 18 | 18 | 18 | 18 | 101–5007–003 | SHCS, M5 X 0.8 P X 12 LG. | 1 |

PARTS LIST

| REV | P.I.N. NO. | REVISION DESCRIPTION | REV BY | DATE | CHK BY | DATE | APP'D BY | DATE | DF |
|---|---|---|---|---|---|---|---|---|---|
| F | 158771 | 3) WAS QTY 11, 14, 14, 11; 4) ADDED FRT RELAY.<br>1) WAS 406–1663–005; 2) WAS 002–4421–011 | WRS | 1 AUG 05 | FWG | 5 AUG 05 | FWG | 5 AUG 05 | |
| E | 158511 | 22) ADDED ITEM #164; 23) ADDED ITEM #165; 24) CORRECTED NOTES; 19) ADDED ITEM #161; 20) ADDED ITEM #162; 21) ADDED ITEM #163; 16) DEL 402–6009–263; 17) ADDED ITEM #159; 18) ADDED ITEM #160; 13) DEL 423–4401–743; 14) DEL 423–4401–742; 15) WAS 423–4401–240; 10) DEL 423–4401–748; 11) DEL 423–4401–747; 12) DEL 423–4401–745; 7) WAS QTY. 10; 8) WAS QTY. 20; 9) WAS 423–4401–769; 4) WAS 1280MM L.G.; 5) WAS 007–3002–012; 6) WAS QTY. 14, 17, 17, 14; 1) WAS 402–6009–262; 2) WAS 407–0041–013, QTY. 3; 3) WAS 007–3002–011; | ROD | 12 MAY 04 | | | | | |
| D | 15712 | 17) WAS QTY 2,0,0,2; 18) WAS QTY 6,6,6,6<br>14) WAS QTY 39,43,43,39; 15)WAS QTY 46,49,49,46; 16) WAS QTY 14,17,14,10 | ROD | 16 OCT 04 | | | | | |
| D | 15712 | 12) DEL 423–4401–744; 13) MOV ATC C'TACTORS TO R'SIDE SEE SHT2 SEC A–A; 8) WAS 409–1001–163; 9) ADD ITEM; 10) ADD ITEM; 11) WAS 423–4401–746; 5) WAS 406–4005–049; 6) WAS 417–6001–011; 7) WAS 409–1001–248; 1) WAS QTY 12,15,15,12; 2) WAS 409–1001–001; 3) WAS QTY. 8; 4) WAS QTY. | ROD | 16 OCT 04 | | | | | |
| C | 15636 | 10)ADDED 404–9081–088; 11) DEL 406–4005–339; 12) DEL 101–5006–004; 7) WAS 110–5001–005; 8) WAS 110–0046–008; 9)WAS 108–5005–003; 4) WAS 803–1000–131; 5) WAS 803–1000–032; 6) WAS 101–5021–013; 1) WAS 404–9081–084; 2) WAS 404–9081–085 FOR; 3) WAS 117–5015–001; | ROD | 24 FEB 04 | | | | | |
| B | 15649 | 14) ADDED ITEM 154; 15) WAS QTY.4; 16)SHT2 SEC B–B REARRANGED RISISTORS; 13) ADDED ITEM 152, 153 & NOTE 5 TO SPECIFY THE CONTENT OF INVERTER; 10), 11) & 12) WAS QTY. 16 etc., EACH ONE ADDED 8 PCS FOR ITEM 150; 7)&8) ADDED ITEM 149 & 148 FOR WORKLIGHT. 9) WAS 117–5011–011 BY ERROR; 4), 5)&6) ADDED ITEM 151, 150 & 155 FOR SPARE HOLES OF WIN MAX; 1) WAS 002–4421–009; 2) WAS QTY. 4 ; 3) WAS 108–5002–003 QTY. 4; | ROD | 24 JUL 03 | | | | | |
| A | 15540 | RELEASE | | | | | | | |

SURFACE TREATMENT

HEAT TREATMENT

FIRST USED ON: VM1

EXCEPT AS NOTED: ALL CORNERS MUST BE AS FOLLOWS
INSIDE: 1.3 X 45° OR 1.3 R MAX
OUTSIDE: 0.8 X 45° OR 1.3 R

EXCEPT AS NOTED: WELDING TOLERANCE MUST BE AS FOLLOWS ±3

EXCEPT AS NOTED: ALL DIMENSIONS IN METRIC TOLERANCE
DECIMAL
.0 ±0.8
.00 ±0.4
.000 ±0.13
.0000 ±0.013
ANGULAR ± 0°30'

THIRD ANGLE PROJECTION

HURCO MANUFACTURING COMPANY, INC.
INDIANAPOLIS, IN U.S.A.

DESCRIPTION: ASS'Y, ELECTRICAL CABINET, VM1, EDIT II

| DRAWN | DATE | CHECKED | DATE | APPROVED | DATE |
|---|---|---|---|---|---|
| ROD | 12–09–02 | | | | |

| SCALE | SIZE | DRAWING | SHT. | REV. |
|---|---|---|---|---|
| NONE | D | 003–1007–048<br>003–1007–049<br>003–1007–050<br>003–1007–059 | 1 OF 4 | F |

UNIT OF MEAS: EA

M

| SIZE | DRAWING | SHT. | REV. |
|---|---|---|---|
| D | 003-1007-048<br>003-1007-049<br>003-1007-050<br>003-1007-059 | 2 OF 4 | F |

PROPRIETARY INFORMATION
INFORMATION CONTAINED HEREIN IS THE PROPERTY OF HURCO MANUFACTURING COMPANY, INC. NO REPRODUCTION OR DISCLOSURE OF THIS INFORMATION SHALL BE MADE BY THE RECIPIENT TO ANY OTHER PERSON OR ORGANIZATION WITHOUT THE PRIOR WRITTEN CONSENT OF HURCO MANUFACTURING COMPANY, INC.

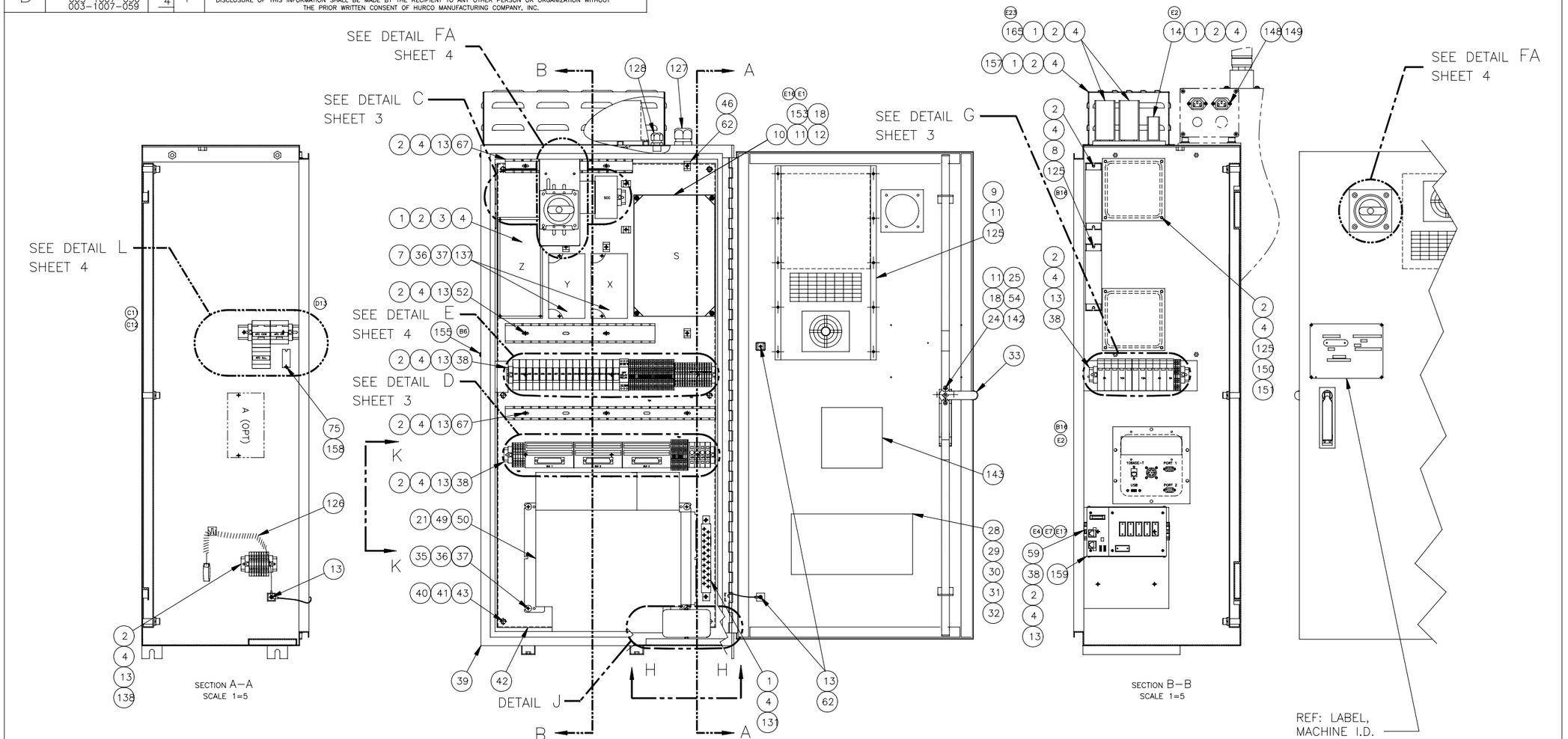


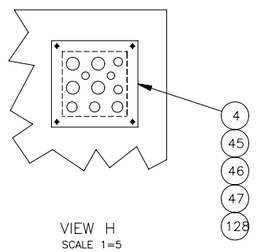


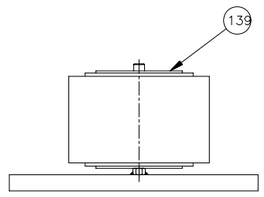


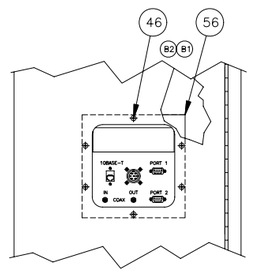


| | | | |
|---|---|---|---|
| SURFACE TREATMENT | EXCEPT AS NOTED: ALL CORNERS MUST BE AS FOLLOWS INSIDE: 1.3 X 45° OR 1.3 R MAX OUTSIDE: 0.8 X 45° OR 1.3 R | EXCEPT AS NOTED: ALL DIMENSIONS IN METRIC TOLERANCE DECIMAL .0 ±0.8 .00 ±0.4 .000 ±0.13 .0000 ±0.013 ANGULAR ± 0°30' | HURCO MANUFACTURING COMPANY, INC. INDIANAPOLIS, IN U.S.A. |
| HEAT TREATMENT | | | DESCRIPTION: ASS'Y, ELECTRICAL CABINET, VM1, EDIT II |
| FIRST USED ON: VM1 | EXCEPT AS NOTED: WELDING TOLERANCE MUST BE AS FOLLOWS ±3 | THIRD ANGLE PROJECTION | DRAWN: ROD; DATE: 12-09-02; CHECKED; DATE; APPROVED; DATE |
| | | | SCALE: 1=5; SIZE: D; DRAWING: 003-1007-048, 003-1007-049, 003-1007-050, 003-1007-059; SHT. 2 OF 4; REV. F |
| | | | UNIT OF MEAS: EA; M |

| SIZE | DRAWING | SHT. | REV. | PROPRIETARY INFORMATION |
|---|---|---|---|---|
| D | 003-1007-048<br>003-1007-049<br>003-1007-050<br>003-1007-059 | 3 OF 4 | F | INFORMATION CONTAINED HEREIN IS THE PROPERTY OF HURCO MANUFACTURING COMPANY, INC. NO REPRODUCTION OR DISCLOSURE OF THIS INFORMATION SHALL BE MADE BY THE RECIPIENT TO ANY OTHER PERSON OR ORGANIZATION WITHOUT THE PRIOR WRITTEN CONSENT OF HURCO MANUFACTURING COMPANY, INC. |

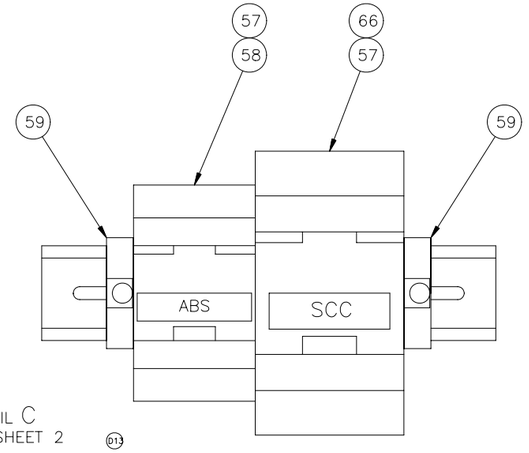


DETAIL C
FROM SHEET 2 (D13)

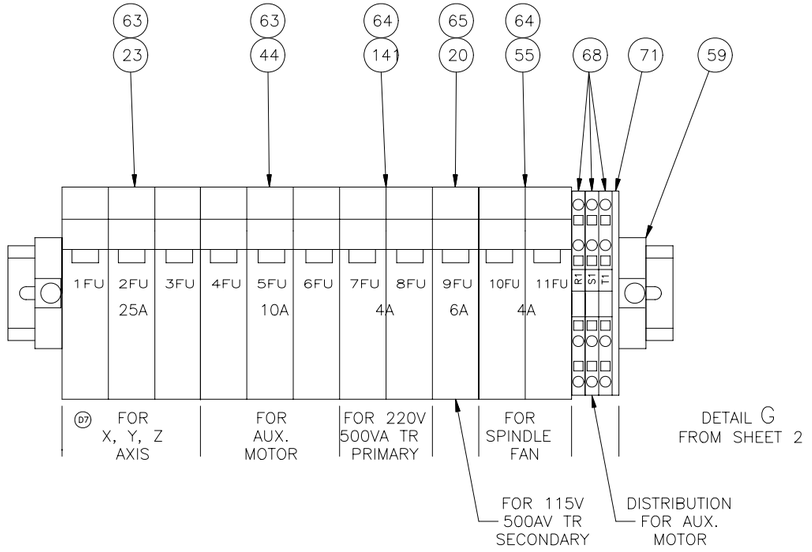


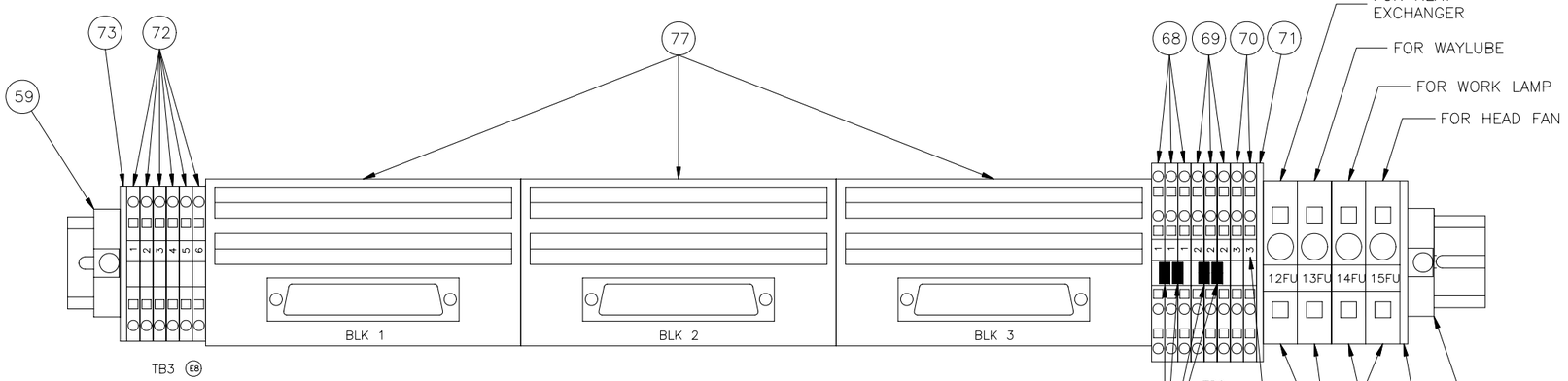


DETAIL D
FROM SHEET 2

NOTE:

CONSOLE ORIGIN
TB3–1 thru 5

24VDC SW ORIGIN
TB1–1

24VDC ORIGIN
TB1–2

MGND ORIGIN
TB1–3

MGND SW ORIGIN
TB1–19

LIMIT SWITCH ORIGIN
TB1–4 thru 18

110VAC ORIGIN
TB2–1 thru 8

| QTY. | PART NUMBER | ITEM DESCRIPTION | ITEM |
|---|---|---|---|

PARTS LIST

| | | | |
|---|---|---|---|
| SURFACE TREATMENT | EXCEPT AS NOTED: ALL CORNERS MUST BE AS FOLLOWS INSIDE: 1.3 X 45° OR 1.3 R MAX OUTSIDE: 0.8 X 45° OR 1.3 R | EXCEPT AS NOTED: ALL DIMENSIONS IN METRIC TOLERANCE DECIMAL .0 ±0.8, .00 ±0.4, .000 ±0.13, .0000 ±0.013 ANGULAR ± 0°30' | HURCO MANUFACTURING COMPANY, INC. INDIANAPOLIS, IN U.S.A. |
| HEAT TREATMENT | | | DESCRIPTION: ASS'Y, ELECTRICAL CABINET, VM1, EDIT II |
| FIRST USED ON: VM1 | EXCEPT AS NOTED: WELDING TOLERANCE MUST BE AS FOLLOWS ±3 | THIRD ANGLE PROJECTION | DRAWN: ROD; DATE: 12–09–02; CHECKED; DATE; APPROVED; DATE |
| | | | SCALE: NOTED; UNIT OF MEAS: EA; SIZE: D; DRAWING: 003–1007–048, 003–1007–049, 003–1007–050, 003–1007–059; SHT. 3 OF 4; REV. F; M |

| SIZE | DRAWING | SHT. | REV. |
|---|---|---|---|
| D | 003-1007-048<br>003-1007-049<br>003-1007-050<br>003-1007-059 | 4 OF 4 | F |

PROPRIETARY INFORMATION

INFORMATION CONTAINED HEREIN IS THE PROPERTY OF HURCO MANUFACTURING COMPANY, INC. NO REPRODUCTION OR DISCLOSURE OF THIS INFORMATION SHALL BE MADE BY THE RECIPIENT TO ANY OTHER PERSON OR ORGANIZATION WITHOUT THE PRIOR WRITTEN CONSENT OF HURCO MANUFACTURING COMPANY, INC.

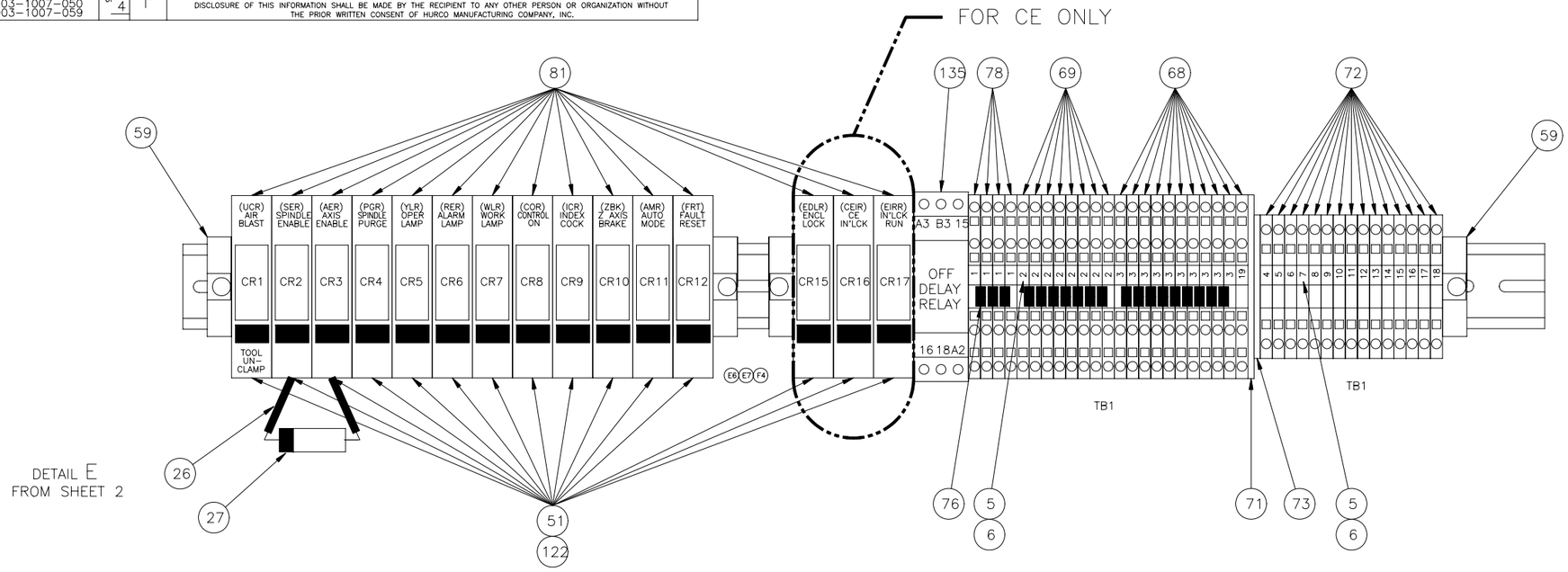


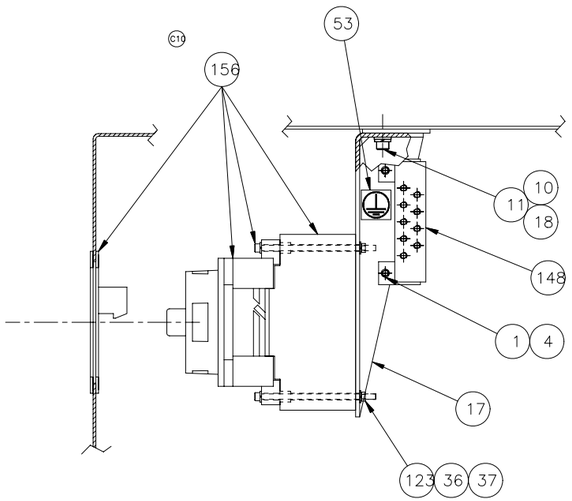


DETAIL FB
FROM SHEET 2

DETAIL FA
FROM SHEET 2

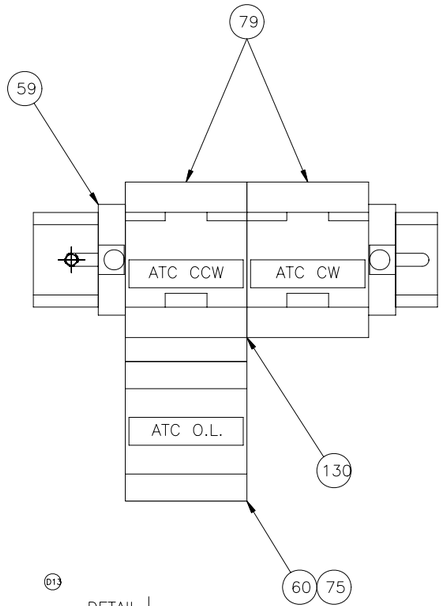


DETAIL L
FROM SHEET 2

NOTE:

CONSOLE ORIGIN
TB3–1 thru 5

24VDC SW ORIGIN
TB1–1

24VDC ORIGIN
TB1–2

MGND ORIGIN
TB1–3

MGND SW ORIGIN
TB1–19

LIMIT SWITCH ORIGIN
TB1–4 thru 18

110VAC ORIGIN
TB2–1 thru 8

| QTY. | PART NUMBER | ITEM DESCRIPTION | ITEM |
|---|---|---|---|

PARTS LIST

| | | | |
|---|---|---|---|
| SURFACE TREATMENT | EXCEPT AS NOTED: ALL CORNERS MUST BE AS FOLLOWS<br>INSIDE: 1.3 X 45° OR 1.3 R MAX<br>OUTSIDE: 0.8 X 45° OR 1.3 R | EXCEPT AS NOTED: ALL DIMENSIONS IN METRIC TOLERANCE<br>DECIMAL<br>.0 ±0.8<br>.00 ±0.4<br>.000 ±0.13<br>.0000 ±0.013<br>ANGULAR ± 0°30' | HURCO MANUFACTURING COMPANY, INC.<br>INDIANAPOLIS, IN U.S.A. |
| HEAT TREATMENT | | | DESCRIPTION: ASS'Y, ELECTRICAL CABINET, VM1, EDIT II |
| FIRST USED ON: VM1 | EXCEPT AS NOTED: WELDING TOLERANCE MUST BE AS FOLLOWS ±3 | THIRD ANGLE PROJECTION | SCALE: NOTED; UNIT OF MEAS: EA; SIZE: D; DRAWING: 003-1007-048, 003-1007-049, 003-1007-050, 003-1007-059; SHT. 4 OF 4; REV. F |

| DRAWN | DATE | CHECKED | DATE | APPROVED | DATE |
|---|---|---|---|---|---|
| ROD | 12-09-02 | | | | |

M

# Ass'y., Console, Max, 007-0012-003—Rev. D

| SIZE | DRAWING | SHT. | REV. |
|---|---|---|---|
| D | 007-0012-003 | 1 OF 3 | D |

**PROPRIETARY INFORMATION**
INFORMATION CONTAINED HEREIN IS THE PROPERTY OF HURCO COMPANIES, INC. NO REPRODUCTION OR DISCLOSURE OF THIS INFORMATION SHALL BE MADE BY THE RECIPIENT TO ANY OTHER PERSON OR ORGANIZATION WITHOUT THE PRIOR WRITTEN CONSENT OF HURCO COMPANIES, INC.

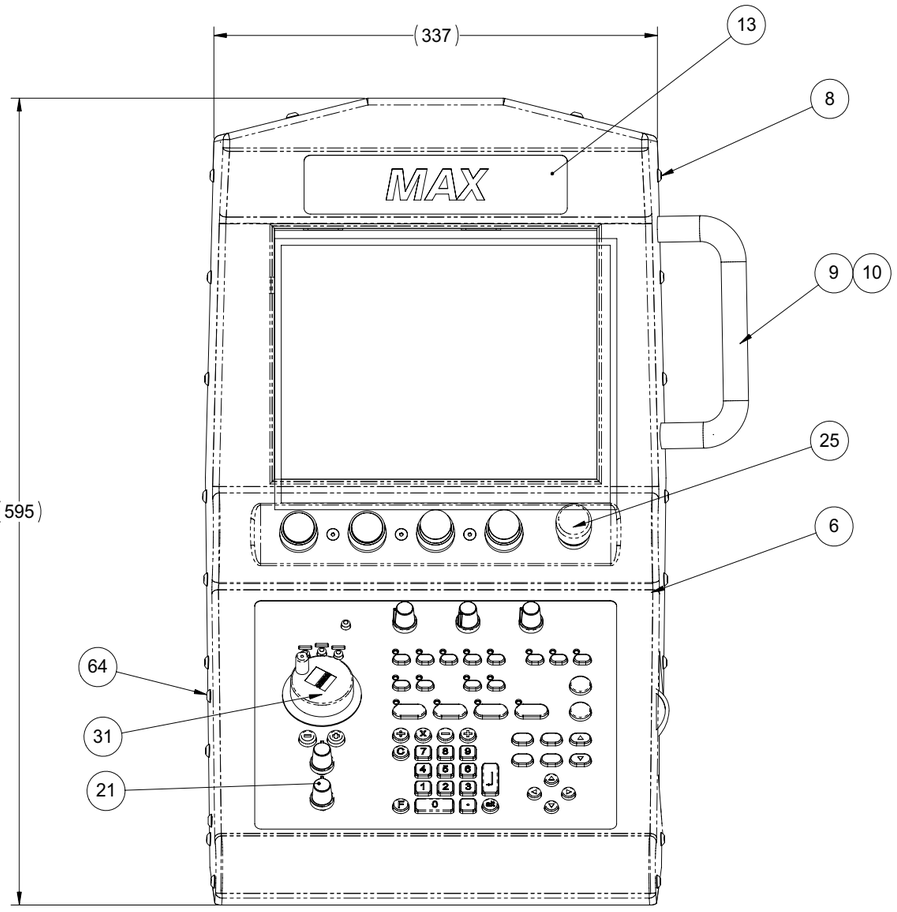


NOTES:
1. ITEM 41 NOT SHOWN ON ASSEMBLY.
2. (B2) ADD 17 MM x 2 MM THICK CLOSED CELL FOAM SEAL AROUND PERIMETER OF FRAME, ITEM 6, AND BEZEL, ITEM 7 AS REQUIRED.

(B1) **NOTE: DURING REVISION B, MOST ITEM NUMBERS CHANGED.**

| | QTY. | PART NO. | DESCRIPTION | ITEM |
|---|---|---|---|---|
| (D1) | 1 | 703-1005-648 | LABEL, PATENT NUMBERS | 66 |
| (B12) | 4 | 110-5001-003 | WASHER, FLAT, M5 | 65 |
| (B12) | 2 | 108-5003-006 | BHSCS, M 5 X 0.8 P X 16 LG | 64 |
| | 2 | 117-5012-001 | NUT, HEX M5 X 0.8 P | 63 |
| | 2 | 110-0046-006 | LOCKWASHER, M5, HELICAL SPRING | 62 |
| | 2 | 109-5008-013 | PPHMS, M3 X 0.5 P X 8 LG | 61 |
| | 3 | 212-0003-003 | WASHER, SPACER, SHOULDER | 60 |
| (B11) | 7 | 109-5024-003 | PPHMS, M4 X 0.7 9 X 8 LG | 59 |
| (B10) | 3 | 110-0140-046 | STANDOFF, HEX, M4 X 44 LG, FF | 58 |
| | 3 | 102-5002-002 | FHSCS, M 4 X 0.7 P X 10 LG | 57 |
| | 1 | 415-0628-901 | ASSY, FLAT PANEL NODE, PCB | 56 |
| (B9) | 1 | 807-0013-009 | KEYBOARD, REMOTE JOG, MAX | 55 |
| | 1 | 415-0638-001 | ASSY, PCB, DETENTED CONSOLE JOG | 54 |
| | 1 | 423-4401-793 | HARNESS, CONSOLE JOG, E-STOP BYPASS, 4 PIN | 53 |
| | 8 | 110-5001-027 | WASHER, M5 FENDER FLAT | 52 |
| | 1 | 703-1005-616 | LABEL, REMOTE JOG COVER | 51 |
| | 1 | 807-0023-003 | GASKET, COVER, REAR | 50 |
| | 1 | 423-4401-178 | HARNESS, E-STOP, CONSOLE | 49 |
| | 1 | 423-4401-723 | HARNESS, FPD POWER, MAX | 48 |
| | 1 | 423-4401-727 | HARNESS, TOUCH SCREEN EXTENSION | 47 |
| | 1 | 423-4401-724 | HARNESS, PROGRAM ENTRY TO FPN, MAX | 46 |
| | 1 | 423-4401-728 | HARNESS, PUSHBUTTON INTERCONNECT, MAX | 45 |
| | 1 | 423-4401-722 | HARNESS, FDD POWER, MAX | 44 |
| | 1 | 423-4401-726 | HARNESS, MACHINE FUNCTION TO FPN, MAX | 43 |
| | 1 | 423-4401-721 | HARNESS, FDD SIGNAL | 42 |
| | 1 | 757-4002-325 | PROCEDURE, MAX CONSOLE BUILD | 41 |
| | 2 | 109-5026-005 | PPHMS, M6 X 1.0 P X 16 LG | 40 |
| | 3 | 110-0066-006 | LOCKWASHER, M4 EXT TOOTH | 39 |
| | 1 | 110-0140-042 | STANDOFF, STAINLESS STEEL, 6 mm HEX - M4 MALE | 38 |
| | 2 | 408-8001-014 | EDGING, RUBBER | 37 |
| | 1 | 423-4401-732 | HARNESS, DETENTED JOG, E-STOP BYPASS | 36 |
| | 3 | 406-5001-021 | TIE MOUNT, MEDIUM | 35 |
| | 11 | 406-5001-006 | TIE WRAP, MEDIUM | 34 |
| | 1 | 423-4401-725 | HARNESS, CONSOLE JOG, 475 mm | 33 |
| | 1 | 007-0020-006 | ASSY, FLOPPY DRIVE | 32 |
| | 1 | 603-1001-028 | KNOB, SPINNER, 100 POS. GRAD. | 31 |
| | 1 | 415-0637-001 | PCB ASSY, PUSHBUTTON INTERCONNECT, MAX | 30 |
| | 4 | 117-5011-001 | NUT, HEX M4 X 0.7 P | 29 |
| | 17 | 117-5010-001 | NUT, HEX M3 X 0.5 P | 28 |
| (B8) | 17 | 108-5003-002 | BHSCS, M 5 X 0.8 P X 8 LG | 27 |
| | 1 | 404-7502-006 | BLOCK, CONTACT, EMERGENCY STOP | 26 |
| | 1 | 404-7502-005 | SWITCH, ACTUATOR, EMERGENCY STOP | 25 |
| | 2 | 404-9200-002 | DIFFUSER, EXTENDED, WHITE | 24 |
| | 1 | 404-9200-004 | DIFFUSER, EXTENDED WITH LEGEND, WHITE | 23 |
| | 4 | 411-0001-015 | LAMP, 24V SLIDE BASE | 22 |
| | 5 | 603-1001-027 | KNOB, 3/4" SKIRTED, 1/4" SHAFT | 21 |
| | 1 | 404-4161-013 | CAP, LENS, SWITCH, EXTENDED, YELLOW | 20 |
| | 1 | 404-9200-001 | DIFFUSER, SWITCH, WHITE | 19 |
| | 2 | 404-4161-012 | CAP, LENS, SWITCH, GREEN | 18 |
| | 1 | 404-4161-011 | CAP, LENS, SWITCH, EXTENDED, RED | 17 |
| | 4 | 404-4121-003 | RING, SWITCH, FRONT | 16 |
| | 3 | 404-3677-001 | SWITCH, P/B MOMENTARY, 2 MAKE | 15 |
| | 1 | 404-3677-004 | SWITCH, LOW LEVEL MAINTAINED | 14 |
| (B7) | 1 | 703-1005-613 | LABEL, MAX | 13 |
| | 1 | 807-0013-011 | KEYBOARD, PROGRAMMING, MAX | 12 |
| (B6) | 1 | 807-0021-003 | FRAME, KEYBOARD, MAX | 11 |
| | 2 | 101-5008-006 | SHCS, M 6 X 1.0 P X 20 LG | 10 |
| | 1 | 603-0521-050 | HANDLE, U-SHAPED | 9 |
| (B5) | 19 | 108-5003-004 | BHCS, M 5 X 0.8 P X 12 LG | 8 |
| | 1 | 807-0003-005 | BEZEL, CONSOLE, MAX | 7 |
| | 1 | 807-0021-001 | FRAME, CONSOLE, MAX | 6 |
| (B4) | 1 | 807-0003-007 | COVER, REAR, CONSOLE | 5 |
| | 1 | 602-0001-022 | CLAMP, CABLE, PVC COATED STEEL | 4 |
| | 2 | 807-0015-024 | BRACKET, MOUNTING, CHASSIS. LCD | 3 |
| | 8 | 101-5007-001 | SHCS, M 5 X 0.8 P X 8 LG | 2 |
| (B3) | 1 | 007-0022-009 | ASSY, LCD & TOUCHSCREEN, MAX | 1 |

| REV | E.C.N. NO. | REVISION DESCRIPTION | REV BY | DATE | CHK BY | DATE | APPD BY | DATE |
|---|---|---|---|---|---|---|---|---|
| . | . | . | . | . | . | . | . | . |
| . | . | . | . | . | . | . | . | . |
| . | . | . | . | . | . | . | . | . |
| D | 15877 | (1) ITEM 66, 703-1005-648 ADDED; (2) SHT 3, VIEW G-G ADDED | JLW | 09/08/2005 | WRS | 09/09/2005 | FWG | 09/09/2005 |
| C | 15628 | SHEET 3, NOTE RELOCATED TO UPPER LEFT OF BOARD | JLW | 7-1 2003 | FWG | 7-3 2003 | PFB | 7-3 2003 |
| B | 15535 | (12) ITEMS 64 & 65 ADDED; SHEET 3, (13) NOTE ADDED (8) WAS QTY 16; (9) WAS 807-0013-006; (10) WAS 110-0014-046; (11) WAS QTY 3; | JLW | 12-18 2002 | FWG | 12-18 2002 | PFB | 12-18 2002 |
| B | 15535 | (5) WAS QTY 16; (6) P/N 703-1005-611 REMOVED; (7) P/N 703-1005-612 REMOVED; (1) NOTE ADDED; (2) NOTE 2 REVISED; (3) WAS 007-0022-007; (4) WAS 807-0003-004 | JLW | 12-19 2002 | FWG | 12-18 2002 | PFB | 12-19 2002 |
| A | 15443 | **ORIGINAL RELEASE** | | | | | | |

SURFACE TREATMENT: NONE
HEAT TREATMENT: NONE
FIRST USED ON: MAX

EXCEPT AS NOTED: ALL CORNERS MUST BE AS FOLLOWS
INSIDE: 1.3 X 45° OR 1.3 R MAX
OUTSIDE: 0.8 X 45° OR 1.3 R
EXCEPT AS NOTED: WELDING TOLERANCE MUST BE AS FOLLOWS ±3

EXCEPT AS NOTED: ALL DIMENSIONS IN METRIC TOLERANCE
DECIMAL .0 ±0.8 .00 ±0.4 .000 ±0.13 .0000 ±0.013
ANGULAR ±0°30'

HURCO COMPANIES, INC. INDIANAPOLIS, IN U.S.A.

DESCRIPTION: ASSY, CONSOLE, MAX

| DRAWN | DATE | CHECKED | DATE | APPROVED | DATE |
|---|---|---|---|---|---|
| JLW | 11-28-01 | FWG | 12-3-01 | PFB | 12-3-01 |

| SCALE | SIZE | DRAWING | SHT. | REV. |
|---|---|---|---|---|
| 1:2 | D | 007-0012-003 | 1 OF 3 | D |

UNIT OF MEAS. EA

| SIZE | DRAWING | SHT. | REV. |
|---|---|---|---|
| D | 007-3002-011 | 1 OF 1 | T |

PROPRIETARY INFORMATION

INFORMATION CONTAINED HEREIN IS THE PROPERTY OF HURCO MANUFACTURING COMPANY, INC. NO REPRODUCTION OR DISCLOSURE OF THIS INFORMATION SHALL BE MADE BY THE RECIPIENT TO ANY OTHER PERSON OR ORGANIZATION WITHOUT THE PRIOR WRITTEN CONSENT OF HURCO MANUFACTURING COMPANY, INC.

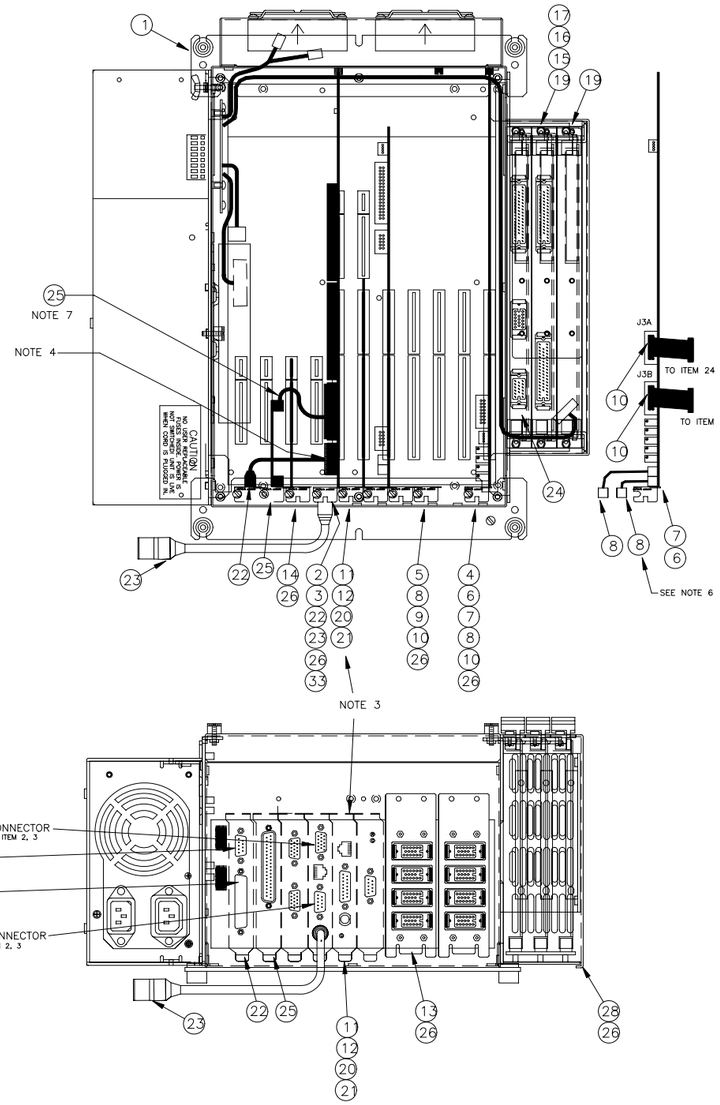


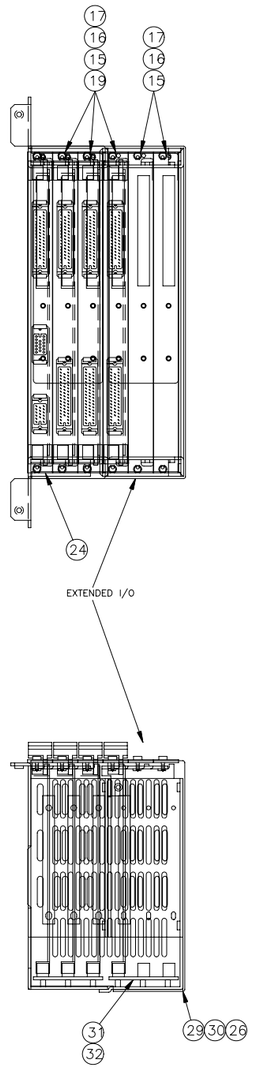


NOTES:

1. FROZEN LAYERS IN THIS DRAWING: AC, PS, SIDE2, FOAM, 25-HD.
2. ITEMS 5 THRU 10 USED ONLY ON 4TH, 5TH, AND 6TH AXIS OPTIONS.
3. ITEMS 11, 12, 20, AND 21 ARE USED ONLY ON NETWORK OPTION.
4. DUAL ROW CONNECTORS ON ITEM 22 HARNESS ASSY MUST BE PLUGGED INTO PARALLEL/SERIAL POER CONNECTORS ON ITEM 2 OR 3 ON ONE END, AND THE PARALLEL/SERIAL PORT CONNECTORS/BRACKET INSTALLED IN THE CHASSIS.
5. ITEM 22 IS CONTAINED WITHIN ITEM 2 AND 3.
6. CABLE POSITION WHEN ONLY QTY. =1.
7. FLOPPY DISK DRIVE CABLE CONNECTS ITEM 2 OR 3 TO ITEM 25.

*TABLE 1*

| PART NUMBER | DESCRIPTION |
|---|---|
| 007-3002-011 | ASSY, C/C, S7, SVGA, CNC++VT, 44 I/O |
| 007-3002-012 | ASSY, C/C, S7, DVGA CNC++ VT, 44 I/O |
| 007-3002-015 | ASSY, C/C, S7, SVGA CNC++ VT, 12 I/O |
| 007-3002-016 | ASSY, C/C, S7, DVGA CNC++ VT, 12 I/O |
| 007-3002-025 | ASSY, C/C, S370, DVGA OCV 5 CH., 44 I/O |
| 007-3002-026 | ASSY, C/C, S370, DVGA OCV 5 CH., 76 I/O |
| 007-3002-027 | ASSY, C/C, S370, DVGA OCV 6 CH., 76 I/O |
| Q 007-3002-030 | ASSY, C/C, S370, SVGA OCV 5 CH., 44 I/O |
| R1 007-3002-031 | ASSY, C/C, S370, DVGA, OCV 5 CH., 76 I/O, EXTENDED I/O |
| R1 007-3002-032 | ASSY, C/C, S370, DVGA, OCV 5 CH., 108 I/O, EXTENDED I/O |

PARTS LIST

| ITEM | DESCRIPTION | PART NUMBER | QTY. -011 | QTY. -012 | QTY. -015 | QTY. -016 | QTY. -025 | QTY. -026 | QTY. -027 | QTY. -030 | QTY. -031 | QTY. -032 |
|---|---|---|---|---|---|---|---|---|---|---|---|---|
| 33 | ASSY,PCI/ISA P/B SOC 7 64M CPU, W/O VIDEO | 007-3003-011 | – | – | – | – | – | – | – | – | – | – |
| 32 | PPHMS, 4-40 X 3/8" W/EXT L.W. SEMS | 109-0001-016 | 9 | 9 | – | – | – | – | – | – | – | – |
| 31 | PCB ASSY,CANBUS DC/IO BACKPLANE, SLOTS 4-6 | 415-0602-003 | 1 | 1 | – | – | – | – | – | – | – | – |
| 30 | COVER, EXTENDED I/O SIDE PANEL | 410-4001-032 | 1 | 1 | – | – | – | – | – | – | – | – |
| 29 | PANEL, I/O EXTENSION | 410-4001-031 | 1 | 1 | – | – | – | – | – | – | – | – |
| 28 | COVER, 6U SIDE PANEL | 410-4001-035 | – | – | 1 | 1 | 1 | 1 | 1 | 1 | 1 | 1 |
| 27 | BRACKET, ISA BLANK | 410-4001-017 | 3 | 3 | 4 | 3 | 3 | 3 | 4 | 3 | 4 | 3 |
| 26 | PPHMS, 6-32 X 1/4 W/EXT LOCKWASHER SEMS | 109-0002-020 | 12 | 12 | 8 | 10 | 10 | 8 | 8 | 8 | 8 | 8 |
| 25 | PCB ASSY, ISA FDD TRANSCEIVER SINGLE WIDE | 415-0606-904 | REF | REF | REF | REF | REF | REF | REF | REF | REF | REF |
| 24 | PCB ASSY, ISA I/O INTERFACE CONFIGURED | 415-0607-002 | REF | REF | REF | REF | REF | REF | REF | REF | REF | REF |
| 23 | ASSY, MINI-DIN TO DIN ADAPTER CABLE | 406-1663-003 | 1 | 1 | 1 | 1 | 1 | 1 | 1 | 1 | 1 | 1 |
| 22 | KIT, ISA PARALLEL, IDE, FDD, 2 SERIAL CABLE | NOTE 5 | REF | REF | REF | REF | REF | REF | REF | REF | REF | REF |
| 21 | CABLE, RG58 COAX W/BNC CONNECTORS, 6' | 406-1663-002 | – | – | – | – | – | – | – | – | – | – |
| 20 | CONNECTOR, BNC Y-TYPE | 406-0804-049 | – | – | – | – | – | – | – | – | – | – |
| 19 | PCB ASSY, CANBUS DC I/O NODE | 415-0601-002 | 3 | 2 | 1 | 2 | 2 | 1 | – | – | 1 | 1 |
| 18 | PPHMS, M4 X 8MM W/EXT T. LW SEMS | 109-5031-002 | – | – | – | – | – | 2 | 2 | – | – | – |
| 17 | SLEEVE, PLASTIC | 406-6010-010 | 4 | 6 | 2 | – | – | 2 | 4 | 4 | 2 | 2 |
| 16 | SCREW, COLLAR M2.5 X 11 | 212-0004-001 | 4 | 6 | 2 | – | – | 2 | 4 | 4 | 2 | 2 |
| 15 | PANEL, FRONT 6V, 4HP | 410-0001-043 | 2 | 3 | 1 | – | – | 1 | 2 | 1 | 1 | 1 |
| 14 | PCB ASSY, DUAL PCI VGA VIDEO CARD, (LEGACY) | 415-0220-009 | 1 | 1 | – | 1 | 1 | 1 | 1 | – | 1 | – |
| 13 | PCB ASSY, ISA/DSP HONDA BREAKOUT | 415-0609-901 | – | – | – | 1 | – | – | – | – | – | – |
| 12 | CABLE, CATEGORY-4 W/RJ-45 CONNECTORS, 6' | 406-1663-001 | – | – | – | – | – | – | – | – | – | – |
| 11 | PCB ASSY, ISA ETHERLINK III NET. INTERF. | 415-0600-004 | – | – | – | – | – | – | – | – | – | – |
| 10 | HARNESS, ISA/DSP TTL I/O | 423-4400-002 | 1 | 1 | 1 | 2 | 1 | 1 | 1 | 1 | 1 | 1 |
| 9 | HARNESS, ISA/DSP SYNC | 423-4400-011 | – | – | – | – | – | – | – | – | – | – |
| 8 | HARNESS, ISA/DSP SERVO I/O | 423-4400-006 | 1 | 1 | 1 | 2 | 1 | 1 | 1 | 1 | 1 | 1 |
| 7 | PCB ASSY, MX4 OCTAVIA 6-CH, XYZSab | 415-0247-012 | – | – | – | 1 | – | – | – | – | – | – |
| 6 | PCB ASSY, MX4 OCTAVIA 5-CH, XYZSa | 415-0247-011 | 1 | 1 | 1 | – | 1 | – | – | – | – | – |
| 5 | PCB ASSY, MX4 CNC++, a,b,c,d (VT) | 415-0247-010 | – | – | – | – | – | – | – | – | – | – |
| 4 | PCB ASSY, MX4 CNC++, X,Y,Z,S (VT) | 415-0247-009 | – | – | – | – | 2 | 1 | 1 | 1 | 1 | 1 |
| 3 | ASSY, PCI/ISA P/B SOC 370 128M CPU | 007-3003-009 | 1 | 1 | 1 | 1 | 1 | – | – | – | – | – |
| 2 | ASSY, PCI/ISA P/B SOC 7 64MB CPU | 007-3003-008 | – | – | – | – | – | 2 | 1 | 2 | 1 | 1 |
| 1 | ASSY, ISA/PCI P/B BASIC CARD CAGE | 007-3002-100 | 1 | 1 | 1 | 1 | 1 | 1 | 1 | 1 | 1 | 1 |

| REV | ECN NO. | REVISION DESCRIPTION | DRAWN BY | DATE | CHK BY | DATE | APP'D BY | DATE | DF |
|---|---|---|---|---|---|---|---|---|---|
| T | 15714 | T1) ADDED ITEM 33 T2) WAS QTY 1 | WRS | 26 FEB 2004 | FWG | 18 MAR 2004 | FWG | 18 MAR 2004 | |
| S | 15672 | ITEM 14 WAS 415-0220-008 | WRS | 15 OCT 2003 | FWG | 15 OCT 2003 | FWG | 15 OCT 2003 | |
| R | 15518 | R1) ADDED 007-3002-031 AND 007-3002-032 R2) ADDED ITEM 28 TO -011, -012, -015, -016, -025, -026, -027, -030 ASSEMBLIES. R3) QTY WAS4 R4) QTY WAS 6 | WRS | MAR 2003 | FWG | MAR 2003 | FWG | MAR 2003 | |
| Q | 15556 | ADDED 007-3002-030 | FWG | 14 FEB 2003 | DEO | 14 FEB 2003 | FWG | 14 FEB 2003 | |
| P | 15463 | P1) WAS 1. P2) WAS 2. | FWG | 5 JUN 2002 | WRS | 5 JUN 2002 | FWG | 5 JUN 2002 | |
| N | 15449 | N1) WAS 0. N2) WAS 1. N3) WAS 2. | | | | | | | |
| M | 15270 | PRINT UPDATED AND REDRAWN, PART OF BOM MOVED TO P/N 007-3002-100 | PES | 27 FEB 2002 | WRS | 28 FEB 2002 | FWG | 11 MAR 2002 | |

SURFACE TREATMENT

HEAT TREATMENT

FIRST USED ON
BMC30SSM
BMC4020HT/SSM
BMC4020HT/M
BMC 40/50M, 50/50M
HAWK 30 & 40 SSM
HAWK 30 & 40 DSM

EXCEPT AS NOTED: ALL DIMENSIONS IN INCHES
TOLERANCE
DECIMAL
.0 ±.0300
.00 ±.0150
.000 ±.0050
.0000 ±.0005
ANGULAR ± 0°30'
BREAK ALL SHARP EDGES
THIRD ANGLE PROJECTION

HURCO MANUFACTURING COMPANY, INC.
INDIANAPOLIS, IN U.S.A.

DESCRIPTION: (SEE TABLE 1)

| DRAWN | DATE | CHECKED | DATE | APPROVED | DATE |
|---|---|---|---|---|---|
| PES | 11SEPT01 | WRS | 11SEPT01 | FWG | 19OCT01 |

SCALE ~ UNIT OF MEAS. ~ | SIZE D | DRAWING 007-3002-011 | SHT. 1 OF 1 | REV. T

# Ass'y., C/C, S7, SVGA, XMP, 44 I/O, 3 I/0 Slots, 007-3002-034—Rev. A

# Ass'y., C/C, S7, DVGA, XMP, 44 I/O, 3 I/0 Slots, 007-3002-035—Rev. A

# Ass'y., C/C, S370, SVGA, XMP, 44 I/O, 3 I/0 Slots, 007-3002-036—Rev. A

| SIZE | DRAWING | SHT. | REV. |
|---|---|---|---|
| D | 007-3002 -034 THRU -040 | 1 OF 1 | A |

PROPRIETARY INFORMATION
INFORMATION CONTAINED HEREIN IS THE PROPERTY OF HURCO MANUFACTURING COMPANY, INC. NO REPRODUCTION OR DISCLOSURE OF THIS INFORMATION SHALL BE MADE BY THE RECIPIENT TO ANY OTHER PERSON OR ORGANIZATION WITHOUT THE PRIOR WRITTEN CONSENT OF HURCO MANUFACTURING COMPANY, INC.

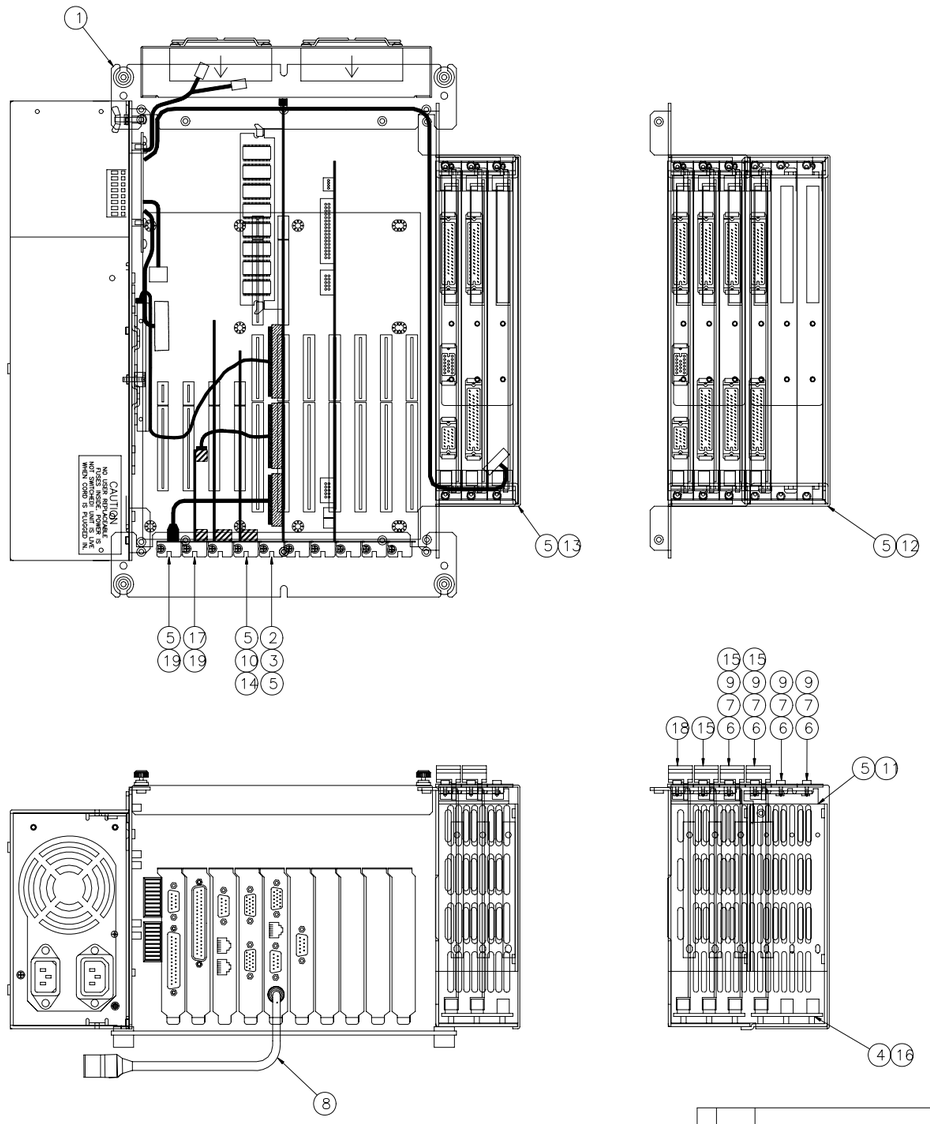


NOTES:

1. DUAL ROW CONNECTORS ON ITEM 19 HARNESS ASSY MUST BE PLUGGED INTO PARALLEL/SERIAL PORT CONNECTORS ON ITEM 2 OR 3 ON ONE END, AND THE PARALLEL/SERIAL PORT CONNECTORS/BRACKET INSTALLED IN THE CHASSIS.
2. ITEM 19 IS CONTAINED WITHIN ITEM 2 AND 3.
3. FLOPPY DISK DRIVE CABLE CONNECTS ITEM 2 OR 3 TO ITEM 17.
4. THE HDD IDE CABLE CONTAINED IN ITEM 19 IS NOT USED.

*TABLE 1*

| *PART NUMBER* | *DESCRIPTION* |
|---|---|
| 007-3002-034 | ASSY, C/C, S7, SVGA, XMP, 44 I/O, 3 I/O SLOTS |
| 007-3002-035 | ASSY, C/C, S7, DVGA, XMP, 44 I/O. 3 I/O SLOTS |
| 007-3002-036 | ASSY, C/C, S370, SVGA, XMP, 44 I/O, 3 I/O SLOTS |
| 007-3002-037 | ASSY, C/C, S370, DVGA, XMP, 44I/O, 3 I/O SLOTS |
| 007-3002-038 | ASSY, C/C, S370, DVGA, XMP, 76 I/O, 3 I/O SLOTS |
| 007-3002-039 | ASSY, C/C, S370, DVGA, XMP, 76 I/O, 6I/O SLOTS |
| 007-3002-040 | ASSY, C/C, S370, DVGA, XMP, 108 I/O, 6 I/O SLOTS |

PARTS LIST

| QTY. -040 | QTY. -039 | QTY. -038 | QTY. -037 | QTY. -036 | QTY. -035 | QTY. -034 | PART NUMBER | ITEM DESCRIPTION | ITEM |
|---|---|---|---|---|---|---|---|---|---|
| REF | REF | REF | REF | REF | REF | REF | NOTE 5 | KIT, ISA PARALLEL, IDE, FDD, 2 SERIAL CABLE | 19 |
| REF | REF | REF | REF | REF | REF | REF | 415-0607-002 | PCB ASSY, ISA I/O INTERFACE CONFIGURED | 18 |
| REF | REF | REF | REF | REF | REF | REF | 415-0606-904 | PCB ASSY, ISA FDD TRANSCEIVER SINGLE WIDE | 17 |
| 1 | 1 | – | – | – | – | – | 415-0602-003 | PCB ASSY,CANBUS DC/IO BACKPLANE, SLOTS 4-6 | 16 |
| 3 | 2 | 2 | 1 | 1 | 1 | 1 | 415-0601-002 | PCB ASSY, CANBUS DC I/O NODE | 15 |
| 1 | 1 | 1 | 1 | – | 1 | – | 415-0220-009 | PCB ASSY, DUAL PCI VGA VIDEO CARD, (LEGACY) | 14 |
| – | – | 1 | 1 | 1 | 1 | 1 | 410-4001-035 | COVER, 6U SIDE PANEL | 13 |
| 1 | 1 | – | – | – | – | – | 410-4001-032 | COVER, EXTENDED I/O SIDE PANEL | 12 |
| 1 | 1 | – | – | – | – | – | 410-4001-031 | PANEL, I/O EXTENSION | 11 |
| – | – | – | – | 1 | – | 1 | 410-4001-017 | BRACKET, ISA BLANK | 10 |
| 2 | 3 | – | 1 | 1 | 1 | 1 | 410-0001-043 | PANEL, FRONT 6V, 4HP | 9 |
| 1 | 1 | 1 | 1 | 1 | 1 | 1 | 406-1663-003 | ASSY, MINI-DIN TO DIN ADAPTER CABLE | 8 |
| 4 | 6 | – | 2 | 2 | 2 | 2 | 406-6010-010 | SLEEVE, PLASTIC | 7 |
| 4 | 6 | – | 2 | 2 | 2 | 2 | 212-0004-001 | SCREW, COLLAR M2.5 X 11 | 6 |
| 11 | 11 | 7 | 7 | 7 | 7 | 7 | 109-0002-020 | PPHMS, 6-32 X 1/4 W/EXT LOCKWASHER SEMS | 5 |
| 9 | 9 | – | – | – | – | – | 109-0001-016 | PPHMS, 4-40 X 3/8" W/EXT L.W. SEMS | 4 |
| 1 | 1 | 1 | 1 | 1 | – | – | 007-3003-009 | ASSY, PCI/ISA P/B SOC 370 128M CPU | 3 |
| – | – | – | – | – | 1 | 1 | 007-3003-008 | ASSY, PCI/ISA P/B SOC 7 64MB CPU | 2 |
| 1 | 1 | 1 | 1 | 1 | 1 | 1 | 007-3002-101 | ASSY, XMP BASIC CARD CAGE | 1 |

| REV | E.C.N. NO. | REVISION DESCRIPTION | REV BY | DATE | CHK BY | DATE | APPD BY | DATE | DF |
|---|---|---|---|---|---|---|---|---|---|
| A | 15829 | RELEASE | | | | | | | |

SURFACE TREATMENT

HEAT TREATMENT

FIRST USED ON: Mill

EXCEPT AS NOTED: ALL CORNERS MUST BE AS FOLLOWS
INSIDE: 1.3 X 45° OR 1.3 R MAX
OUTSIDE: 0.8 X 45° OR 1.3 R

EXCEPT AS NOTED: WELDING TOLERANCE MUST BE AS FOLLOWS ±3

EXCEPT AS NOTED: ALL DIMENSIONS IN METRIC TOLERANCE
DECIMAL
.0 ±0.8
.00 ±0.4
.000 ±0.13
.0000 ±0.013
ANGULAR ± 0°30'

THIRD ANGLE PROJECTION

HURCO MANUFACTURING COMPANY, INC.
INDIANAPOLIS, IN U.S.A.

DESCRIPTION: (SEE CHART ABOVE)

| DRAWN | DATE | CHECKED | DATE | APPROVED | DATE |
|---|---|---|---|---|---|
| WRS | 4/25/05 | FWG | 5/12/05 | FWG | 5/12/05 |

| SCALE | SIZE | DRAWING | SHT. | REV. |
|---|---|---|---|---|
| NONE | D | 007-3002 -034 THRU -040 | 1 OF 1 | A |

UNIT OF MEAS. EA

| SIZE | DRAWING | SHT. | REV. |
|---|---|---|---|
| D | 007–3004–005 | 1 OF 1 | D |

PROPRIETARY INFORMATION

INFORMATION CONTAINED HEREIN IS THE PROPERTY OF HURCO MANUFACTURING COMPANY, INC. NO REPRODUCTION OR DISCLOSURE OF THIS INFORMATION SHALL BE MADE BY THE RECIPIENT TO ANY OTHER PERSON OR ORGANIZATION WITHOUT THE PRIOR WRITTEN CONSENT OF HURCO MANUFACTURING COMPANY, INC.

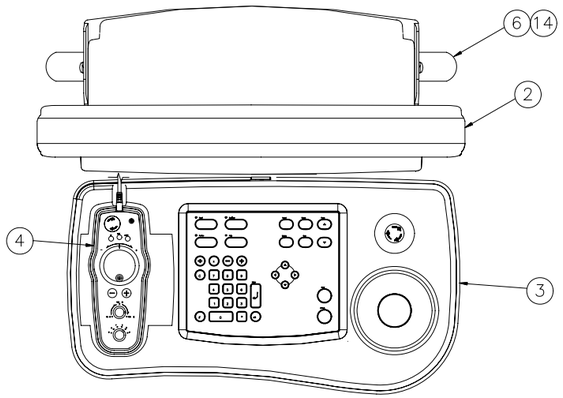


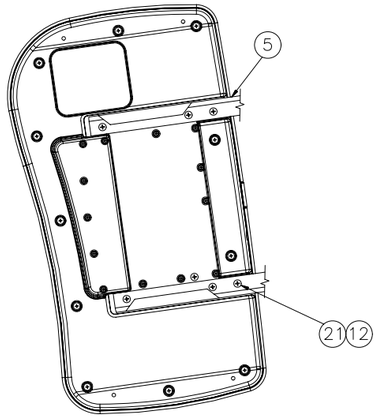


VIEW A–A

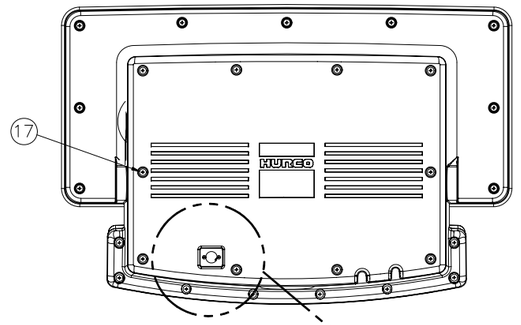


VIEW B–B

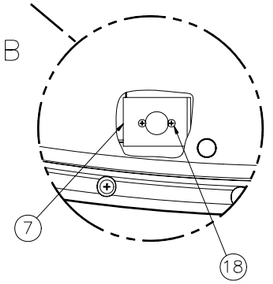


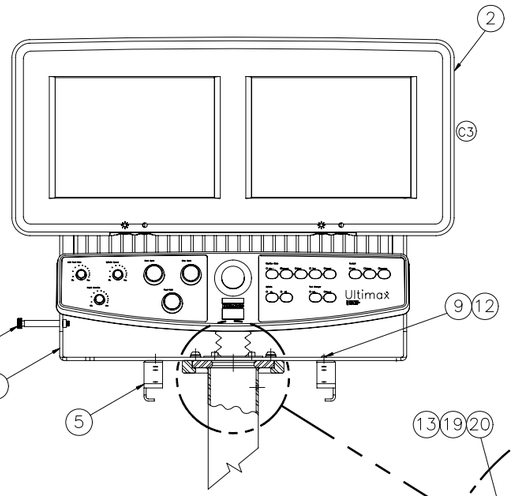


NOTE: ITEM 3 NOT SHOWN IN THIS VIEW FOR CLARITY

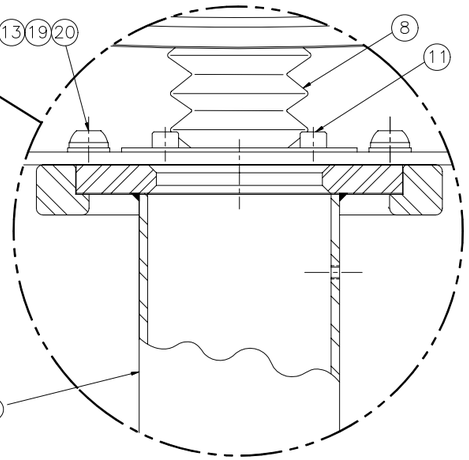


REF: PENDANT ARM (P/N 803–1024–004)

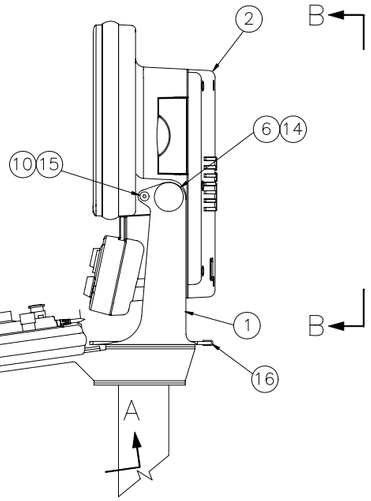


NOTES:
1. SHIP FASTENERS AND ACCESSORIES (ITEMS 6–21,23,24) IN A BAG.
2. (C1) INCLUDE IN EACH BAG A "B" SIZE COPY OF THIS PRINT.
3. PLACE ON THE SEALED BAG A LABEL STATING:
DO NOT OPEN UNTIL INSTALLATION AT FINAL
CUSTOMER SITE.

| | | | |
|---|---|---|---|
| D | 1 | 423–4401–873 | HARNESS, 6–PIN MINI–DIN (F) TO 5–PIN DIN (M) | 24 |
| C4 | 1 | 115–5003–007 | SHSS, 10MM DIAM. X 60MM LONG | 23 |
| | 1 | 614–0002–016 | BOX ASS'Y, MAX 4 CONSOLE | 22 |
| | 7 | 109–5026–003 | PPHMS, M6 x 1.0P x 12.0 LG | 21 |
| | 6 | 110–0046–008 | LOCKWASHER, M8 HELICAL SPRING | 20 |
| | 4 | 110–5001–005 | WASHER, M8 FLAT | 19 |
| | 3 | 109–5022–005 | PPHMS, M3 x 0.5P x 10.0 LG | 18 |
| | 10 | 109–5026–005 | PPHMS, M6 x 1.0P x 16.0 LG | 17 |
| C2 | 19.75" | 342–0001–005 | TRIM, 3/16" BLACK, LOCKING, FINE | 16 |
| | 3 | 211–7501–008 | BUSHING, BRONZE 8.0 ID x 10.0 OD | 15 |
| | 3 | 110–5001–019 | WASHER, FLAT NYLON .328" ID x .75" OD | 14 |
| | 5 | 108–5005–004 | BHSCS, M8 x 1.25P x 20.0 LG | 13 |
| | 11 | 110–0066–011 | LOCKWASHER, M6 EXT TOOTH | 12 |
| | 5 | 101–5008–024 | SHCS, M6 x 1.0P x 6.0 LG | 11 |
| | 3 | 108–5005–003 | BHSCS, M8 x 1.25P x 16.0 LG | 10 |
| | 5 | 108–5004–001 | BHSCS, M6 x 1.0 P x 10.0 LG | 9 |
| | 1 | 807–0018–001 | BELLOWS, CONSOLE | 8 |
| | 1 | 807–0015–008 | PLATE, DUAL NUT | 7 |
| | 2 | 603–1001–026 | KNOB, PIVOT LOCKING | 6 |
| | 1 | 807–0015–006 | BRACKET SET, PROGRAM ENTRY | 5 |
| | 1 | 007–3017–001 | ASS'Y, DETENTED JOG | 4 |
| | 1 | 007–3016–001 | ASS'Y, DUAL FLAT PANEL PEK | 3 |
| | 1 | 007–3015–002 | ASS'Y, DUAL TFT FLAT PANEL DISPLAY | 2 |
| | 1 | 807–0017–001 | YOKE 24" | 1 |
| QTY. | PART NUMBER | ITEM DESCRIPTION | | ITEM |

PARTS LIST

| REV | E.C.N. NO. | REVISION DESCRIPTION | REV BY | DATE | CHK BY | DATE | APPD BY | DATE | DF |
|---|---|---|---|---|---|---|---|---|---|
| D | 15585 | ADDED ITEM 24. | FWG | 11 APR 03 | WRS | 11 APR 03 | FWG | 11 APR 03 | |
| C | 14884 | C1)ADDED NOTE 2; C2) ITEM # 16 QTY. WAS 20"; C3)REMOVED SCREEN LABELS; C4) ADDED ITEM 23; | PES | 3 JUN 00 | GL | 3 JUN 00 | FWG | 3 JUN 00 | |
| B | 14698 | REDRAWN FROM A–SIZE BOM TO D–SIZE DWG | SAD | 13 JUL 99 | PES | 11 AUG 99 | FWG | 16 AUG 99 | |
| A | 14549 | REL | | | | | | | |

SURFACE TREATMENT

HEAT TREATMENT

FIRST USED ON: MAX 4

EXCEPT AS NOTED: ALL CORNERS MUST BE AS FOLLOWS
INSIDE: .050" X 45° OR .05" R MAX
OUTSIDE: .030" X 45° OR .05" R

EXCEPT AS NOTED: ALL DIMENSIONS IN INCHES TOLERANCE
DECIMAL: .0 ±.0300; .00 ±.0150; .000 ±.0050; .0000 ±.0005
ANGULAR ± 0°30'

EXCEPT AS NOTED: WELDING TOLERANCE MUST BE AS FOLLOWS ±.12

THIRD ANGLE PROJECTION

HURCO MANUFACTURING COMPANY, INC.
INDIANAPOLIS, IN U.S.A.

DESCRIPTION: ASS'Y, DUAL TFT FLAT PANEL CONSOLE

| DRAWN | DATE | CHECKED | DATE | APPROVED | DATE |
|---|---|---|---|---|---|
| JDN | 3–16–99 | PES | 3–17–99 | FWG | 3–19–99 |

| SCALE | SIZE | DRAWING | SHT. | REV. |
|---|---|---|---|---|
| NONE | D | 007–3004–005 | 1 OF 1 | D |

UNIT OF MEAS: EA

| DRAWING | REV. | PROPRIETARY INFORMATION | EXCEPT AS NOTED: ALL CORNERS MUST BE AS FOLLOWS | |
|---|---|---|---|---|
| 007–3005–018 | H | INFORMATION CONTAINED HEREIN IS THE PROPERTY OF HURCO MANUFACTURING COMPANY, INC. NO REPRODUCTION OR DISCLOSURE OF THIS INFORMATION SHALL BE MADE BY THE RECIPIENT TO ANY OTHER PERSON OR ORGANIZATION WITHOUT THE PRIOR WRITTEN CONSENT OF HURCO MANUFACTURING COMPANY, INC. | INSIDE: .050'' X 45° OR .05'' R MAX<br>OUTSIDE: .030'' X 45° OR .05'' R | CN |

## CONTROL HARDWARE

| ITEM | PART NO. | DESCRIPTION: | QTY |
|---|---|---|---|
| 1 | 007–3002–012 | ASSY, C/C, ISA/PCI, PASS B/P, M/C DUAL VGA | 1 |
| 2 | 007–3004–005 | ASSY, DUAL TFT FLAT PANEL CONSOLE | 1 |

## CONTROL SOFTWARE

| | ITEM | PART NO. | DESCRIPTION: | QTY | |
|---|---|---|---|---|---|
| | 3 | 007–4123–015 | SW/PKG, ULTIMAX INSTALLATION | 1 | |
| | 4 | 007–4137–008 | PKG, PRODUCTION OPTIKEY DISKETTE | 1 | |
| | 5 | 708–0001–013 | FOLDER, ULTIMAX SOFTWARE DISKETTE | 1 | |
| C2 | 6 | ~~007–4123–010~~ | ~~DISK, ULTIMAX V2.XX PATCH UTILITY~~ | 0 | E H |
| C1 | 7 | 007–3010–003 | KIT, MAX 4 DELIGHT | 1 | |
| D F | 8 | 007–4124–045 | OPTION, ADVANCED VELOCITY CTRL OPTIKEY | 1 | |
| G | 9 | 416–0003–010 | S/W SECURITY BUTTON HOLDER | 1 | |

NOTES:

1. PACKING: SUBCONTRACTOR SHALL PROVIDE PROPER PACKING MATERIAL FOR TRANSPORTATION.
2. SHIPPING: PART NUMBERS SHALL BE CLEARLY MARKED ON ALL SHIPMENTS.
3. REVISION: KIT SHALL BE MANUFACTURED USING CURRENT REVISION DRAWINGS AND SOFTWARE VERSIONS.
4. SERIALIZATION: ALL SUBASSEMBLIES SHALL BE MARKED WITH SUBCONTRACTOR'S SERIAL NUMBERS.

| REV | ECN NO. | REVISION DESCRIPTION | REV BY | DATE | CHK BY | DATE | APPD BY | DATE | DF |
|---|---|---|---|---|---|---|---|---|---|
| H | 15839 | REMOVED ITEM 6 | BVP | APR 19 2005 | FWG | APR 19 2005 | FWG | APR 19 2005 | |
| G | 15623 | ADDED ITEM 9 | WRS | JUN 24 2003 | FWG | JUN 24 2003 | FWG | JUN 24 2003 | |
| F | 15515 | WAS 007–4124–041 | BVP | OCT 23 2002 | FWG | OCT 23 2002 | FWG | OCT 23 2002 | |
| E | 15417 | ITEM 6 WAS BLANK | WRS | MAR 20 2002 | BVP | MAR 20 2002 | GT | MAR 20 2002 | |
| D | 15270 | ADDED ITEM 8 | FWG | FEB 06 2002 | BVP | FEB 06 2002 | FWG | FEB 06 2002 | |
| C | 15227 | C1) ADDED ITEM 7: C2) ITEM 6 WAS 007–4123–010; | PES | MAR 30 2001 | WRS | MAR 30 2001 | FWG | MAY 30 2001 | |
| B | 14872 | MODIFIED TO ACCOMODATE NEW ULTIMAX INSTALL PROCEDURE | RMN | APR 26 2000 | BVP | APR 27 2000 | GT | MAY 23 2000 | |
| A | 14549 | RELEASE | | | | | | | |

SURFACE TREATMENT

HEAT TREATMENT

FIRST USED ON: MAX 4

EXCEPT AS NOTED: ALL DIMENSIONS IN INCHES TOLERANCE

| DECIMAL | |
|---|---|
| .0 | ±.0300 |
| .00 | ±.0150 |
| .000 | ±.0050 |
| .0000 | ±.0005 |

ANGULAR ±0°30'

THIRD ANGLE PROJECTION

HURCO MANUFACTURING COMPANY, INC.
INDIANAPOLIS, IN U.S.A.

DESCRIPTION: CONTROL KIT, MAX 4 TFT

| DRAWN | DATE | CHECKED | DATE | APPROVED | DATE |
|---|---|---|---|---|---|
| JDN | 16MAR99 | PES | 17MAR99 | FWG | 19MAR99 |

| SCALE | SIZE | DRAWING | SHT. | REV. |
|---|---|---|---|---|
| NONE | A | 007–3005–018 | 1 OF 1 | H |

UNIT OF MEAS: EA.

| DRAWING | REV. | PROPRIETARY INFORMATION |
|---|---|---|
| 007–3005–054 | C | INFORMATION CONTAINED HEREIN IS THE PROPERTY OF HURCO MANUFACTURING COMPANY, INC. NO REPRODUCTION OR DISCLOSURE OF THIS INFORMATION SHALL BE MADE BY THE RECIPIENT TO ANY OTHER PERSON OR ORGANIZATION WITHOUT THE PRIOR WRITTEN CONSENT OF HURCO MANUFACTURING COMPANY, INC. |

## CONTROL HARDWARE

| Item | Part Number | Description | Qty |
|---|---|---|---|
| 1 | 007–0012–003 | ASSY, MAX CONSOLE | 1 |
| 2 | 007–3002–011 | ASSY, C/C, S7, SVGA, CNC++VT, 44 I/O | 1 |
| 3 | 416–0003–009 | S/W SECURITY BUTTON | 1 |
| 4 | 416–0003–010 | S/W BUTTON HOLDER | 1 |
| 5 | 708–0001–013 | FOLDER, SOFTWARE DISKS | 1 |

## CONTROL SOFTWARE

| | Item | Part Number | Description | Qty |
|---|---|---|---|---|
| | 6 | 007–4123–015 | SW, ULTIMAX V2.XX PRODUCTION | 1 |
| (C) | 7 | ~~007–4123–010~~ | ~~DISK, ULTIMAX V2.XX PATCH UTILITY~~ | 0 |
| | 8 | 007–4137–008 | S/W PKG, SKCOX 200 #0 | 1 |
| (B) | 9 | 007–4124–045 | OPTION, ADVANCED VELOCITY CTRL | 1 |

1. REVISION: KIT SHOULD BE MANUFACTURED USING CURRENT DRAWINGS AND SOFTWARE VERSIONS.

2. SERIALIZATION: ALL SUBASSEMBLIES SHOULD BE MARKED WITH SUBCONTRACTOR'S SERIAL NUMBERS.

3. REVISION: KIT SHOULD BE MANUFACTURED USING CURRENT DRAWINGS AND SOFTWARE VERSIONS.

4. SERIALIZATION: ALL SUBASSEMBLIES SHOULD BE MARKED WITH SUBCONTRACTOR'S SERIAL NUMBERS.

| REV | ECN NO. | | REV BY | DATE | CHK BY | DATE | APPD BY | DATE | DF |
|---|---|---|---|---|---|---|---|---|---|
| C | 15839 | REMOVED ITEM #7 | BVP | 19 APR 2005 | FWG | 19 APR 2005 | FWG | 19 APR 2005 | |
| B | 15515 | WAS 007–4124–041 | BVP | 23 OCT 2002 | FWG | 23 OCT 2002 | FWG | 23 OCT 2002 | |
| A | 15462 | RELEASE | | | | | | | |

HEAT TREATMENT

FIRST USED ON
VM1,VSX

EXCEPT AS NOTED:
ALL DIMENSIONS IN INCHES
TOLERANCE
DECIMAL
.0 ±.0300
.00 ±.0150
.000 ±.0050
.0000 ±.0005
ANGULAR ±0°30'

THIRD ANGLE PROJECTION

HURCO MANUFACTURING COMPANY, INC.
INDIANAPOLIS, IN U.S.A.

DESCRIPTION
KIT, MAX CONTROL

| DRAWN | DATE | CHECKED | DATE | APPROVED | DATE |
|---|---|---|---|---|---|
| FWG | 14MAY02 | DEO | 14MAY02 | FWG | 14MAY02 |

| SCALE | SIZE | DRAWING | SHT. | REV. |
|---|---|---|---|---|
| NONE | A | 007–3005–054 | 1 OF 1 | C |

UNIT OF MEAS. EA.

| DRAWING | REV. | PROPRIETARY INFORMATION |
|---|---|---|
| 007–3005–056 | C | INFORMATION CONTAINED HEREIN IS THE PROPERTY OF HURCO MANUFACTURING COMPANY, INC. NO REPRODUCTION OR DISCLOSURE OF THIS INFORMATION SHALL BE MADE BY THE RECIPIENT TO ANY OTHER PERSON OR ORGANIZATION WITHOUT THE PRIOR WRITTEN CONSENT OF HURCO MANUFACTURING COMPANY, INC. |

## CONTROL HARDWARE

| Item | Part Number | Description | Qty |
|---|---|---|---|
| 1 | 007–0012–003 | ASSY, MAX CONSOLE | 1 |
| 2 | 007–3002–030 | ASSY, C/C S370 SVGA OCV–5CH 44 I/O | 1 |
| 3 | 416–0003–009 | S/W SECURITY BUTTON | 1 |
| 4 | 416–0003–010 | S/W BUTTON HOLDER | 1 |
| 5 | 708–0001–013 | FOLDER, SOFTWARE DISKS | 1 |

## CONTROL SOFTWARE

| | Item | Part Number | Description | Qty |
|---|---|---|---|---|
| | 6 | 007–4123–015 | SW, ULTIMAX V2.XX PRODUCTION | 1 |
| C | 7 | ~~007–4123–010~~ | ~~DISK, ULTIMAX V2.XX PATCH UTILITY~~ | 0 |
| | 8 | 007–4137–008 | S/W PKG, SKCOX 200 #0 | 1 |
| | 9 | 007–4124–049 | OPTION, ASF OPTIKEY | 1 |
| | 10 | 007–0020–009 | KIT, MAX CLASSIC UPGRADE | 1 |
| | 11 | 007–4124–045 | OPTION, ADVANCED VELOCITY. CTRL, OPTIKEY | 1 |

1. REVISION: KIT SHOULD BE MANUFACTURED USING CURRENT DRAWINGS AND SOFTWARE VERSIONS.

2. SERIALIZATION: ALL SUBASSEMBLIES SHOULD BE MARKED WITH SUBCONTRACTOR'S SERIAL NUMBERS.

3. REVISION: KIT SHOULD BE MANUFACTURED USING CURRENT DRAWINGS AND SOFTWARE VERSIONS.

4. SERIALIZATION: ALL SUBASSEMBLIES SHOULD BE MARKED WITH SUBCONTRACTOR'S SERIAL NUMBERS.

| REV | ECN NO. | | REV BY | DATE | CHK BY | DATE | APPD BY | DATE | DF |
|---|---|---|---|---|---|---|---|---|---|
| C | 15839 | REMOVED ITEM #7 | BVP | 19 APR 05 | FWG | 19 APR 05 | FWG | 19 APR 05 | |
| B | 15642 | ADDED ITEM 11 | WRS | 28 AUG 03 | FWG | 28 AUG 03 | FWG | 28 AUG 03 | |
| A | 15556 | RELEASE | | | | | | | |

HEAT TREATMENT

FIRST USED ON: VMX__S/ASF

EXCEPT AS NOTED: ALL DIMENSIONS IN INCHES TOLERANCE
DECIMAL
.0 ±.0300
.00 ±.0150
.000 ±.0050
.0000 ±.0005
ANGULAR ±0°30'

THIRD ANGLE PROJECTION

HURCO MANUFACTURING COMPANY, INC.
INDIANAPOLIS, IN U.S.A.

DESCRIPTION: KIT, MAX S370 OCV–5CH 44 IO ASF

| DRAWN | DATE | CHECKED | DATE | APPROVED | DATE |
|---|---|---|---|---|---|
| FWG | 12FEB03 | DEO | 13FEB03 | FWG | 13FEB03 |

| SCALE | SIZE | DRAWING | SHT. | REV. |
|---|---|---|---|---|
| NONE | A | 007–3005–056 | 1 OF 1 | C |

UNIT OF MEAS: EA.

| DRAWING | REV. | PROPRIETARY INFORMATION |
|---|---|---|
| 007-3005-058 | A | INFORMATION CONTAINED HEREIN IS THE PROPERTY OF HURCO MANUFACTURING COMPANY, INC. NO REPRODUCTION OR DISCLOSURE OF THIS INFORMATION SHALL BE MADE BY THE RECIPIENT TO ANY OTHER PERSON OR ORGANIZATION WITHOUT THE PRIOR WRITTEN CONSENT OF HURCO MANUFACTURING COMPANY, INC. |

EXCEPT AS NOTED:
ALL CORNERS MUST BE AS FOLLOWS
INSIDE: .050'' X 45° OR .05'' R MAX
OUTSIDE: .030'' X 45° OR .05'' R

| ITEM | PART NO. | DESCRIPTION | QTY |
|---|---|---|---|
| 1 | 007-3002-035 | ASSY, C/C, S7, DVGA, XMP, 44 I/O, 3SLOT | 1 |
| 2 | 007-3004-005 | ASSY, DUAL TFT FLAT PANEL CONSOLE | 1 |
| 3 | 007-3010-003 | KIT, MAX 4 DELIGHT | 1 |
| 4 | 007-4123-015 | SW/PKG, ULTIMAX INSTALLATION | 1 |
| 5 | 007-4124-045 | OPTION, ADVANCED VELOCITY CTRL OPTIKEY | 1 |
| 6 | 007-4137-008 | PKG, PRODUCTION OPTIKEY DISKETTE | 1 |
| 7 | 007-5002-001 | ASSY, RMB MODULE 4M-1E | 1 |
| 8 | 406-1663-006 | CABLE, RJ-45 SHIELDED CAT5E, 5 FT. OR 2M | 2 |
| 9 | 416-0003-009 | S/W SECURITY BUTTON | 1 |
| 10 | 416-0003-010 | S/W SECURITY BUTTON HOLDER | 1 |
| 11 | 423-4401-993 | HARNESS, RMB DUAL DC POWER | 1 |
| 12 | 703-1005-643 | LABEL, AXIS MAPPING | 1 |
| 13 | 708-0001-013 | FOLDER, ULTIMAX SOFTWARE DISKETTE | 1 |

NOTES:
1. PACKING: SUBCONTRACTOR SHALL PROVIDE PROPER PACKING MATERIAL FOR TRANSPORTATION.
2. SHIPPING: PART NUMBERS SHALL BE CLEARLY MARKED ON ALL SHIPMENTS.
3. REVISION: KIT SHALL BE MANUFACTURED USING CURRENT REVISION DRAWINGS AND SOFTWARE VERSIONS.
4. SERIALIZATION: ALL SUBASSEMBLIES SHALL BE MARKED WITH SUBCONTRACTOR'S SERIAL NUMBERS.

| REV | E.C.N. NO. | REVISION DESCRIPTION | REV BY | DATE | CHK BY | DATE | APPD BY | DATE | DF |
|---|---|---|---|---|---|---|---|---|---|
| A | 15829 | REL | | | | | | | |

SURFACE TREATMENT
HEAT TREATMENT
FIRST USED ON: MAX 4

EXCEPT AS NOTED: ALL DIMENSIONS IN INCHES TOLERANCE
DECIMAL
.0 ±.0300
.00 ±.0150
.000 ±.0050
.0000 ±.0005
ANGULAR ±0°30'

THIRD ANGLE PROJECTION

HURCO MANUFACTURING COMPANY, INC.
INDIANAPOLIS, IN U.S.A.

DESCRIPTION: CONTROL KIT, DSM, S7, SYNQNET, 1RMB, 44 I/O

| DRAWN | DATE | CHECKED | DATE | APPROVED | DATE |
|---|---|---|---|---|---|
| WRS | 4/26/05 | FWG | 5/12/05 | FWG | 5/12/05 |

| SCALE | SIZE | DRAWING | SHT. | REV. |
|---|---|---|---|---|
| N/A | A | 007-3005-058 | 1 OF 1 | A |

UNIT OF MEAS: EA.

| DRAWING | REV. | PROPRIETARY INFORMATION |
|---|---|---|
| 007–3005–059 | A | INFORMATION CONTAINED HEREIN IS THE PROPERTY OF HURCO MANUFACTURING COMPANY, INC. NO REPRODUCTION OR DISCLOSURE OF THIS INFORMATION SHALL BE MADE BY THE RECIPIENT TO ANY OTHER PERSON OR ORGANIZATION WITHOUT THE PRIOR WRITTEN CONSENT OF HURCO MANUFACTURING COMPANY, INC. |

EXCEPT AS NOTED:
ALL CORNERS MUST BE AS FOLLOWS
INSIDE: .050'' X 45° OR .05'' R MAX
OUTSIDE: .030'' X 45° OR .05'' R

| ITEM | PART NUMBER | DESCRIPTION | QTY |
|---|---|---|---|
| 1 | 007–0012–003 | ASSY, MAX CONSOLE | 1 |
| 2 | 007–3002–034 | ASSY, C/C, S7, SVGA, XMP, 44 I/O, 3 I/O SLOTS | 1 |
| 3 | 007–4123–015 | SW, ULTIMAX V2.XX PRODUCTION | 1 |
| 4 | 007–4124–045 | ~~OPTION, ADVANCED VELOCITY CTRL~~ | 0 |
| 5 | 007–4137–008 | S/W PKG, SKCOX 200 #0 | 1 |
| 6 | 007–5002–001 | ASSY, RMB MODULE 4M–1E | 1 |
| 7 | 406–1663–006 | CABLE, RJ–45 SHIELDED CAT5E, 5 FT. OR 2M. | 2 |
| 8 | 416–0003–009 | S/W SECURITY BUTTON | 1 |
| 9 | 416–0003–010 | S/W BUTTON HOLDER | 1 |
| 10 | 423–4401–993 | HARNESS, RMB DUAL DC POWER | 1 |
| 11 | 703–1005–643 | LABEL, AXIS MAPPING | 1 |
| 12 | 708–0001–013 | FOLDER, SOFTWARE DISKS | 1 |

NOTES:
1. PACKING: SUBCONTRACTOR SHALL PROVIDE PROPER PACKING MATERIAL FOR TRANSPORTATION.
2. SHIPPING: PART NUMBERS SHALL BE CLEARLY MARKED ON ALL SHIPMENTS.
3. REVISION: KIT SHALL BE MANUFACTURED USING CURRENT REVISION DRAWINGS AND SOFTWARE VERSIONS.
4. SERIALIZATION: ALL SUBASSEMBLIES SHALL BE MARKED WITH SUBCONTRACTOR'S SERIAL NUMBERS.
5. PRELIMINARY STRUCTURE INCLUDED 007–4124–045.

| REV | E.C.N. NO. | REVISION DESCRIPTION | REV BY | DATE | CHK BY | DATE | APPD BY | DATE | DF |
|---|---|---|---|---|---|---|---|---|---|
| A | 15829 | ORIGINAL RELEASE | | | | | | | |

SURFACE TREATMENT

HEAT TREATMENT

FIRST USED ON: Mill

EXCEPT AS NOTED:
ALL DIMENSIONS IN INCHES
TOLERANCE
DECIMAL
.0 ±.0300
.00 ±.0150
.000 ±.0050
.0000 ±.0005
ANGULAR ±0°30'

THIRD ANGLE PROJECTION

HURCO MANUFACTURING COMPANY, INC.
INDIANAPOLIS, IN U.S.A.

DESCRIPTION: CONTROL KIT, MAX, S7, SYNQNET, 1 RMB, 44 I/O

| DRAWN | DATE | CHECKED | DATE | APPROVED | DATE |
|---|---|---|---|---|---|
| WRS | 2/26/05 | FWG | 5/12/05 | FWG | 5/12/05 |

| SCALE | SIZE | DRAWING | SHT. | REV. |
|---|---|---|---|---|
| N/A | A | 007–3005–059 | 1 OF 1 | A |

UNIT OF MEAS: EA.

| DRAWING | REV. | PROPRIETARY INFORMATION |
|---|---|---|
| 007–3005–061 | A | INFORMATION CONTAINED HEREIN IS THE PROPERTY OF HURCO MANUFACTURING COMPANY, INC. NO REPRODUCTION OR DISCLOSURE OF THIS INFORMATION SHALL BE MADE BY THE RECIPIENT TO ANY OTHER PERSON OR ORGANIZATION WITHOUT THE PRIOR WRITTEN CONSENT OF HURCO MANUFACTURING COMPANY, INC. |

EXCEPT AS NOTED:
ALL CORNERS MUST BE AS FOLLOWS
INSIDE: .050'' X 45° OR .05'' R MAX
OUTSIDE: .030'' X 45° OR .05'' R

| ITEM | PART NO. | DESCRIPTION | QTY |
|---|---|---|---|
| 1 | 007–0012–003 | ASSY, MAX CONSOLE | 1 |
| 2 | 007–0020–009 | KIT, MAX CLASSIC UPGRADE | 1 |
| 3 | 007–3002–036 | ASSY, C/C, S370, SVGA, XMP, 44 I/O, 3 I/O SLOTS | 1 |
| 4 | 007–4123–015 | SW, ULTIMAX V2.XX PRODUCTION | 1 |
| 5 | 007–4124–045 | ~~OPTION, ADVANCED VELOCITY. CTRL, OPTIKEY~~ | 0 |
| 6 | 007–4124–049 | OPTION, ASF OPTIKEY | 1 |
| 7 | 007–4137–008 | S/W PKG, SKCOX 200 #0 | 1 |
| 8 | 007–5002–001 | ASSY, RMB MODULE 4M–1E | 1 |
| 9 | 406–1663–006 | CABLE, RJ–45 SHIELDED CAT5E, 5 FT. OR 2M | 2 |
| 10 | 416–0003–009 | S/W SECURITY BUTTON | 1 |
| 11 | 416–0003–010 | S/W BUTTON HOLDER | 1 |
| 12 | 423–4401–993 | HARNESS, RMB DUAL DC POWER | 1 |
| 13 | 703–1005–643 | LABEL, AXIS MAPPING | 1 |
| 14 | 708–0001–013 | FOLDER, SOFTWARE DISKS | 1 |

NOTES:
1. PACKING: SUBCONTRACTOR SHALL PROVIDE PROPER PACKING MATERIAL FOR TRANSPORTATION.
2. SHIPPING: PART NUMBERS SHALL BE CLEARLY MARKED ON ALL SHIPMENTS.
3. REVISION: KIT SHALL BE MANUFACTURED USING CURRENT REVISION DRAWINGS AND SOFTWARE VERSIONS.
4. SERIALIZATION: ALL SUBASSEMBLIES SHALL BE MARKED WITH SUBCONTRACTOR'S SERIAL NUMBERS.
5. PRELIMINARY STRUCTURE INCLUDED 007–4124–045.

| REV | E.C.N. NO. | REVISION DESCRIPTION | REV BY | DATE | CHK BY | DATE | APPD BY | DATE | DF |
|---|---|---|---|---|---|---|---|---|---|
| A | 15829 | ORIGINAL RELEASE | | | | | | | |

SURFACE TREATMENT
HEAT TREATMENT
FIRST USED ON: MAX

EXCEPT AS NOTED:
ALL DIMENSIONS IN INCHES
TOLERANCE
DECIMAL
.0 ±.0300
.00 ±.0150
.000 ±.0050
.0000 ±.0005
ANGULAR ±0°30'

THIRD ANGLE PROJECTION

HURCO MANUFACTURING COMPANY, INC.
INDIANAPOLIS, IN U.S.A.

DESCRIPTION: CONTROL KIT, MAX, ASF, SYNQNET, 1 RMB, 44 I/O

| DRAWN | DATE | CHECKED | DATE | APPROVED | DATE |
|---|---|---|---|---|---|
| WRS | 4/26/05 | FWG | 5/12/05 | FWG | 5/12/05 |

| SCALE | SIZE | DRAWING | SHT. | REV. |
|---|---|---|---|---|
| N/A | A | 007–3005–061 | 1 OF 1 | A |

UNIT OF MEAS: EA.

# Ass'y., Dual TFT Flat Panel Display, 007-3015-002—Rev. D

| SIZE | DRAWING | SHT. | REV. |
|---|---|---|---|
| D | 007-3015-002 | 1 OF 3 | D |

PROPRIETARY INFORMATION
INFORMATION CONTAINED HEREIN IS THE PROPERTY OF HURCO MANUFACTURING COMPANY, INC. NO REPRODUCTION OR DISCLOSURE OF THIS INFORMATION SHALL BE MADE BY THE RECIPIENT TO ANY OTHER PERSON OR ORGANIZATION WITHOUT THE PRIOR WRITTEN CONSENT OF HURCO MANUFACTURING COMPANY, INC.

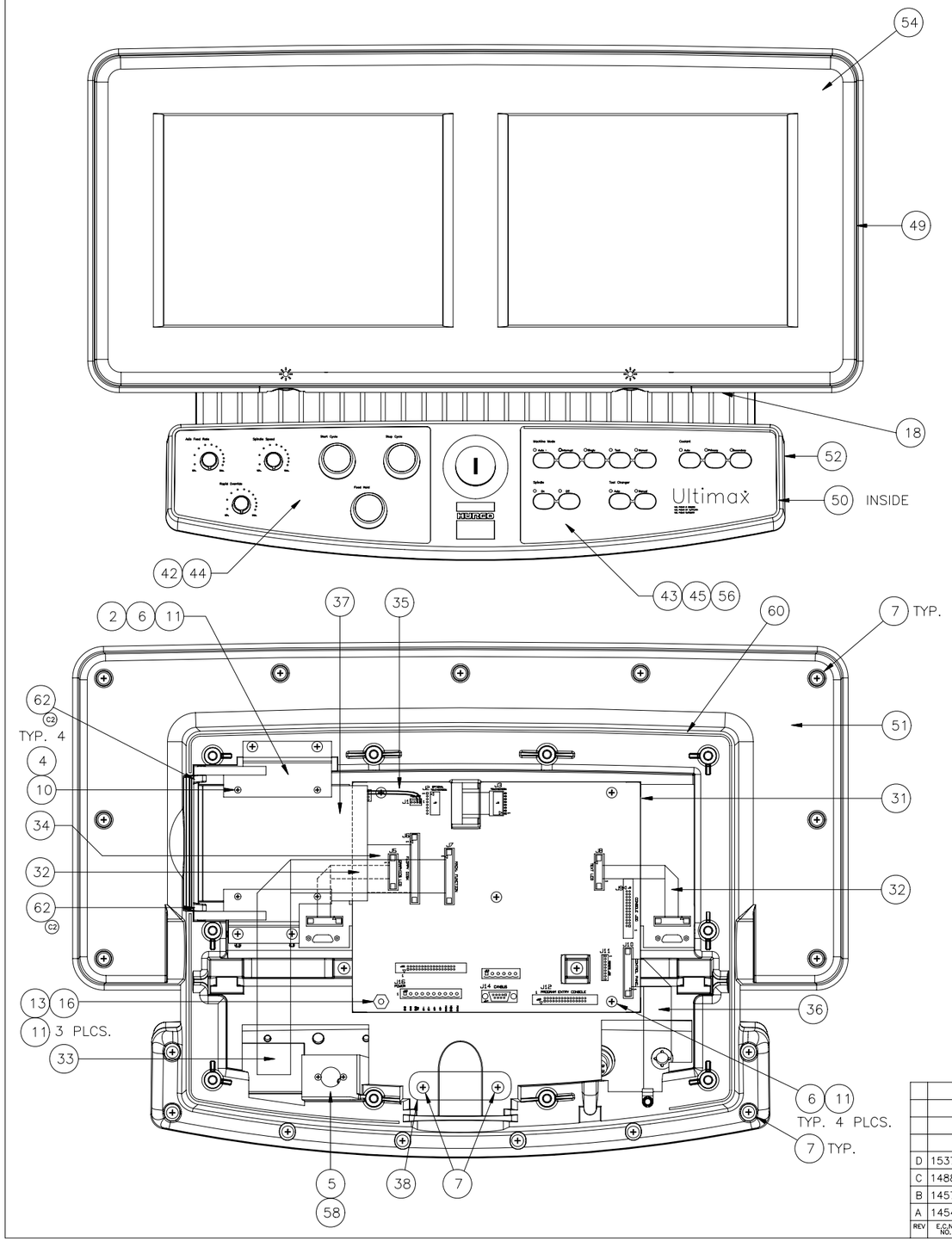


NOTES:

1. REFERENCE ENGINEERING DOCUMENT 757-4002-164 /CAD NO. D8571 FOR DETAILED BUILD PROCEDURE.
2. ATTACH REAR PANEL CASEPART (ITEM 53) USING FOUR M6 PPHMS SCREWS (ITEM 7).
3. LABELS (ITEMS 42, 43, 44 AND 45) ARE NOT TO BE APPLIED OR PACKED WITH THIS ASSEMBLY.
4. USE ITEM 41 ADHESIVE TO ATTACH ITEM 49 RUBBER BUMPER TO BEZEL.
5. ITEMS 3, 5, 7, 9, 14, 17, 39 AND 58 USED TO INSTALL THIS ASSEMBLY ARE A PART OF MAX4 CONSOLE FASTENER KIT 007-3023-001.
6. INSTALL ONE ITEM 11 WASHER UNDER EACH ITEM 12 STANDOFF.
7. INSTALL ONE ITEM 59 WASHER BETWEEN BOSS AND CIRCUIT BOARD, UNDER THE MOUNTING HOLE OF THE CENTER PCB OF ITEM 30.
8. INSTALL ITEMS 50 AND 60 USING ITEM 41.
9. APPLY 702-0001-005 (ITEM 61) RTV TO THE AREAS SHOWN PER THE PROCEDURE ON SHEET THREE. THIS PROCEDURE MUST BE COMPLETED PRIOR TO ANY BEZEL ASSEMBLY.
10. (C3) APPLY 515-0002-006 (ITEM 62) GREASE TO THE AREAS NOTED IN STEP 20 IN THE PROCEDURE ON SHEET EIGHT. THIS PROCEDURE MUST BE COMPLETED PRIOR TO ANY DOOR ASSEMBLY.
11. (C5) USE ADEQUATE QUANTITY AND QUALITY PACKAGING MATERIAL TO PROTECT BOTH DISPLAYS FROM DAMAGE DUE TO SHIPPING HAZARDS.

| | QTY. | PART NUMBER | ITEM DESCRIPTION | ITEM |
|---|---|---|---|---|
| | | | PARTS LIST | |
| C2 | A/R | 515-0002-006 | GREASE, LITHIUM | 62 |
| | A/R | 702-0001-005 | RTV, CLEAR CAULK SILICONE | 61 |
| | 4.0 FT | 807-0007-004 | CORD, 0.079" BUNA | 60 |
| | 1 | 110-5001-002 | WASHER, FLAT M4 | 59 |
| | REF | 807-0015-008 | PLATE, DUAL NUT | 58 |
| | 4 | 807-0015-003 | BRACKET, TOUCHSCREEN | 57 |
| C1 | 1 | 807-0013-004 | KEYBOARD,MACHINE FUNCTION(ELASTOMER/GOLD PILL) | 56 |
| | 1 | 807-0009-009 | CASEPART, (FLOPPY) DOOR | 55 |
| | 1 | 807-0009-012 | CASEPART, (FRONT) BEZEL, NO CONTRAST | 54 |
| | 1 | 807-0009-007 | CASEPART, (REAR) PANEL | 53 |
| | 1 | 807-0009-006 | CASEPART, (MACHINE) CONTROL PANEL | 52 |
| | 1 | 807-0009-001 | CASEPART, (CHASSIS) | 51 |
| | 2.67 FT | 807-0007-003 | CORD, .070" BUNA | 50 |
| | 6.5 FT | 807-0007-001 | EXTRUSION, RUBBER BUMPER | 49 |
| C6 | 1 | 807-0006-002 | TOUCHSCREEN, 4-WIRE RESISTIVE | 48 |
| | 1 | 807-0005-001 | PANEL, 10 X 8 GLASS | 47 |
| C4 | 0 | 703-1005-487 | LABEL, TOUCHSCREEN MAX4 | 46 |
| | REF | 703-1005-462 | LABEL, MACHINE FUNCTION (GERMAN) | 45 |
| | REF | 703-1005-461 | LABEL, CONTROL PANEL (GERMAN) | 44 |
| | REF | 703-1005-459 | LABEL, MACHINE FUNCTION (ENGLISH) | 43 |
| | REF | 703-1005-458 | LABEL, CONTROL PANEL (ENGLISH) | 42 |
| | REF | 702-0002-002 | ADHESIVE, CYANOACRYLATE | 41 |
| | 3 | 603-1001-027 | KNOB, 3/4" SKIRTED 1/4" SHAFT | 40 |
| | REF | 603-1001-026 | KNOB, LOCKING PIVOT | 39 |
| | 1 | 602-0001-022 | CLAMP, CABLE, PVC COATED STEEL | 38 |
| | 1 | 426-0056-007 | DISK DRIVE, 3.5" FD 1.44M | 37 |
| | 1 | 423-4401-186 | HARNESS, CPI TO FPN | 36 |
| | 1 | 423-4401-176 | HARNESS, FDD POWER | 35 |
| | 1 | 423-4401-174 | HARNESS, FDD SIGNAL | 34 |
| | 1 | 423-4401-173 | HARNESS, MACHINE FUNCTION TO FPN | 33 |
| | 2 | 423-4401-172 | HARNESS, FPD POWER | 32 |
| D1 | 1 | 415-0628-002 | PCB ASSY, FLAT PANEL NODE REMOTE JOG | 31 |
| | 1 | 415-0625-001 | PCB ASSY, CONTROL PANEL INTERCONNECT | 30 |
| | 4 | 411-0001-015 | LAMP, 24V SLIDE BASE | 29 |
| | 1 | 404-9200-004 | DIFFUSER, WITH LEGEND (FLAT WHITE) | 28 |
| | 2 | 404-9200-002 | DIFFUSER, EXTENDED WHITE | 27 |
| | 1 | 404-9200-001 | DIFFUSER, FLUSH WHITE | 26 |
| | 1 | 404-4161-013 | LENS CAP, EXTENDED YELLOW | 25 |
| | 2 | 404-4161-012 | LENS CAP, FLUSH GREEN | 24 |
| | 1 | 404-4161-011 | LENS CAP, EXTENDED RED | 23 |
| | 3 | 404-4121-003 | FRONT RING, SWITCH | 22 |
| | 1 | 404-3677-028 | ADAPTER, FLUSH MOUNT SERIES 14 PB SWITCH | 21 |
| | 1 | 404-3677-004 | SWITCH, LOW LEVEL MAINTAINED 2 MAKE | 20 |
| | 3 | 404-3677-001 | SWITCH, P/B MOMENTARY, 2 MAKE | 19 |
| | 1 | 331-0001-013 | GASKET, NEOPRENE CLOSED CELL | 18 |
| | REF | 211-7501-008 | BUSHING, BRONZE 8MM ID X 10MM OD X 5MM LONG | 17 |
| | 1 | 117-5001-001 | HEX NUT, M4 X 0.7 P | 16 |
| | 4 | 117-0100-003 | LOCKNUT, METRIC DIN 985 M3 | 15 |
| | REF | 110-5001-019 | FLATWASHER, NYLON .3281 ID X .750 OD | 14 |
| | 1 | 110-0140-042 | STANDOFF, STAINLESS STEEL 6MM HEX MALE-MALE, M4 | 13 |
| | 2 | 110-0140-040 | STANDOFF, M-F M4X40MM | 12 |
| | 32 | 110-0066-006 | LOCKWASHER, M4 EXT TOOTH | 11 |
| | 4 | 110-0066-004 | LOCKWASHER, M3 EXTERNAL | 10 |
| | REF | 108-5005-004 | BHSCS, M8 X 20mm, BLACK OXIDE | 9 |
| | -- | -- | -- | 8 |
| | 25 | 109-5026-005 | PPHMS, M6 X 1 X 16, BLACK OXIDE | 7 |
| | 27 | 109-5024-003 | PPHMS, M4 X 0.7 X 8mm, BLACK OXIDE | 6 |
| | REF | 109-5022-005 | PPHMS, M3 X 10, BL OXIDE PHILLIPS | 5 |
| | 4 | 109-5022-004 | PPHMS, M3 X 8, BLACK OXIDE | 4 |
| B | REF | 108-5005-003 | M8 X 16mm BHSCS, DIN9427 | 3 |
| | 1 | 007-3019-001 | BRACKET SET, FLOPPY DRIVE | 2 |
| | 2 | 007-0022-003 | ASSY, FPD (PCI/TFT) 12.1" LCD 800 X 600 W/BL | 1 |

| REV | E.C.N. NO. | REVISION DESCRIPTION | REV BY | DATE | CHK BY | DATE | APPD BY | DATE | DF |
|---|---|---|---|---|---|---|---|---|---|
| D | 15370 | D1)ITEM #31 WAS 415-0628-001. | PES | 03 DEC 2001 | WRS | 03 DEC 2001 | FWG | 09 JAN 2002 | |
| C | 14884 | C1)ITEM #56 WAS 807-0013-001;C2)ADDED ITEM62;C3)ADDED NOTE 10;C4)ITEM 46 QUANTITY WAS 2; C5)ADDED NOTE 11;C6)ITEM 48 WAS 807-0006-001; | PES | 09 MAR 2000 | JDN | 10 MAR 2000 | JDN | 10 MAR 2000 | |
| B | 14577 | ITEM #3 WAS 109-5027-004 | PES | 26 APR 1999 | JDN | 06 APR 1999 | FWG | 10 JUN 1999 | |
| A | 14549 | RELEASE | | | | | | | |

SURFACE TREATMENT

HEAT TREATMENT

FIRST USED ON: MAX4

EXCEPT AS NOTED: ALL CORNERS MUST BE AS FOLLOWS
INSIDE: 1.3 X 45° OR 1.3 R MAX
OUTSIDE: 0.8 X 45° OR 1.3 R

EXCEPT AS NOTED: WELDING TOLERANCE MUST BE AS FOLLOWS ±3

EXCEPT AS NOTED: ALL DIMENSIONS IN METRIC TOLERANCE
DECIMAL
.0 ±0.8
.00 ±0.4
.000 ±0.13
.0000 ±0.013
ANGULAR ± 0°30'

THIRD ANGLE PROJECTION

HURCO MANUFACTURING COMPANY, INC.
INDIANAPOLIS, IN U.S.A.

DESCRIPTION: ASSY, DUAL TFT FLAT PANEL DISPLAY

| DRAWN | DATE | CHECKED | DATE | APPROVED | DATE |
|---|---|---|---|---|---|
| JDN | 03-16-99 | PES | 03-17-99 | FWG | 03-19-99 |

| SCALE | SIZE | DRAWING | SHT. | REV. |
|---|---|---|---|---|
| NONE | D | 007-3015-002 | 1 OF 3 | D |

UNIT OF MEAS. EA

| SIZE | DRAWING | SHT. | REV. |
|---|---|---|---|
| D | 007–3015–002 | 2 OF 3 | D |

PROPRIETARY INFORMATION

INFORMATION CONTAINED HEREIN IS THE PROPERTY OF HURCO MANUFACTURING COMPANY, INC. NO REPRODUCTION OR DISCLOSURE OF THIS INFORMATION SHALL BE MADE BY THE RECIPIENT TO ANY OTHER PERSON OR ORGANIZATION WITHOUT THE PRIOR WRITTEN CONSENT OF HURCO MANUFACTURING COMPANY, INC.

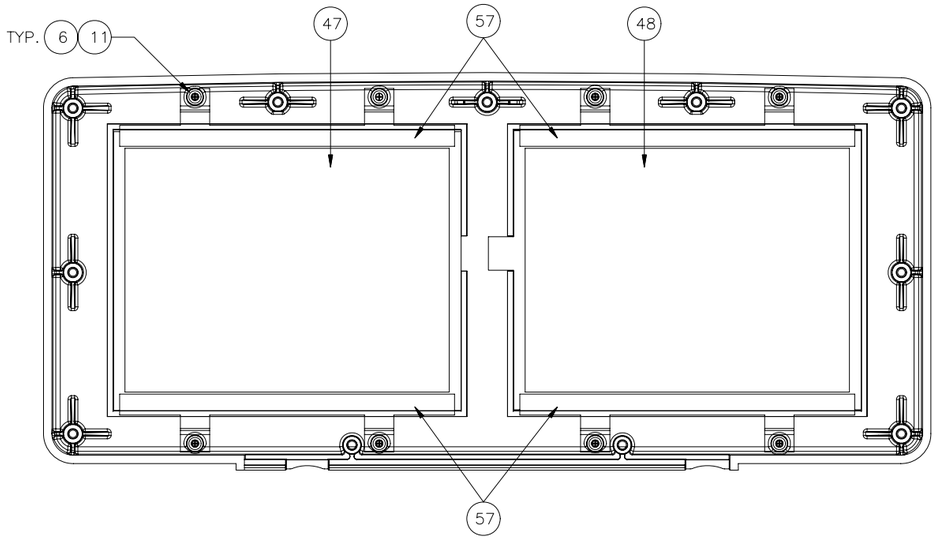


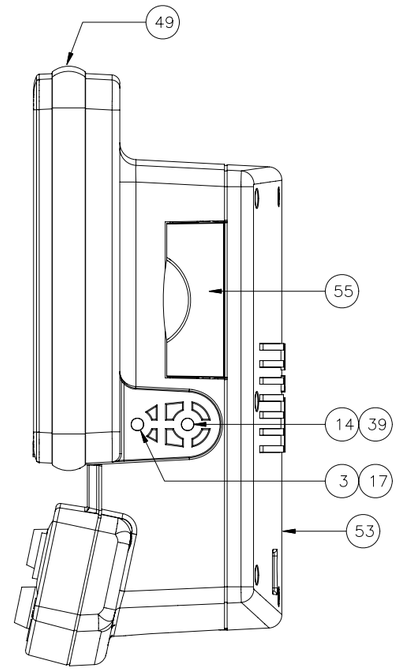


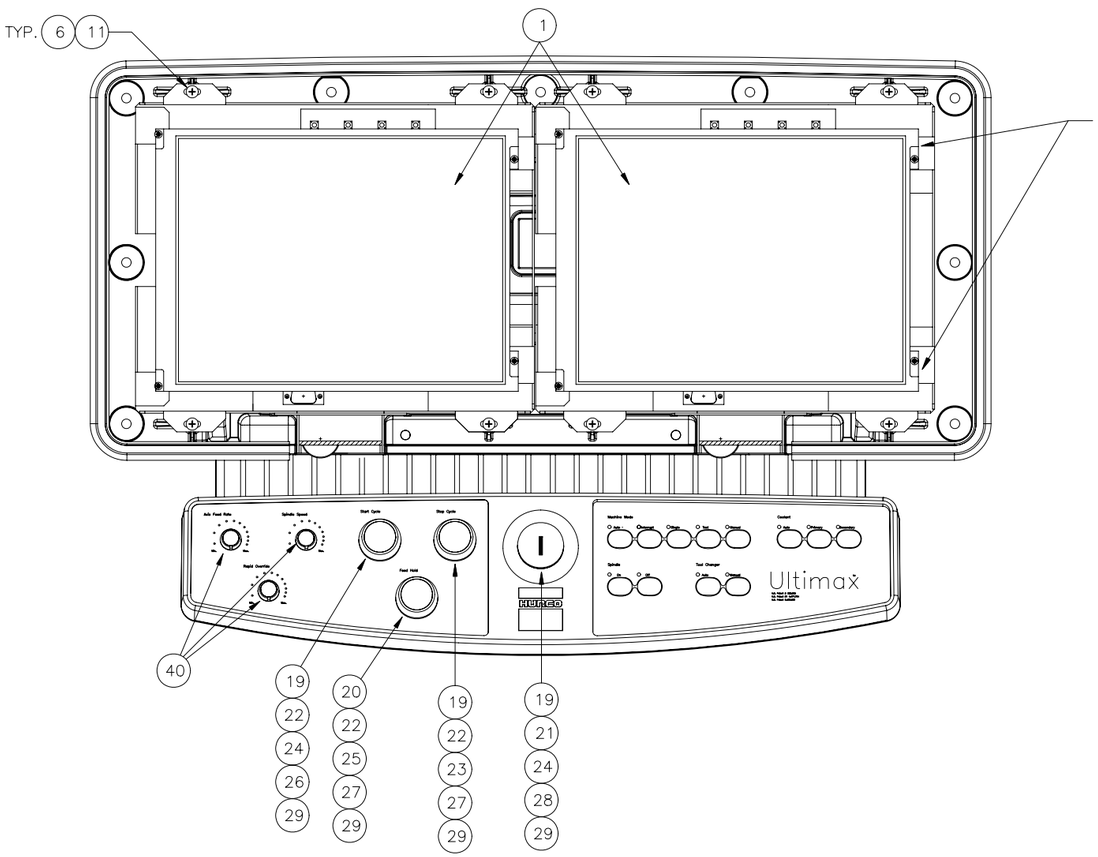


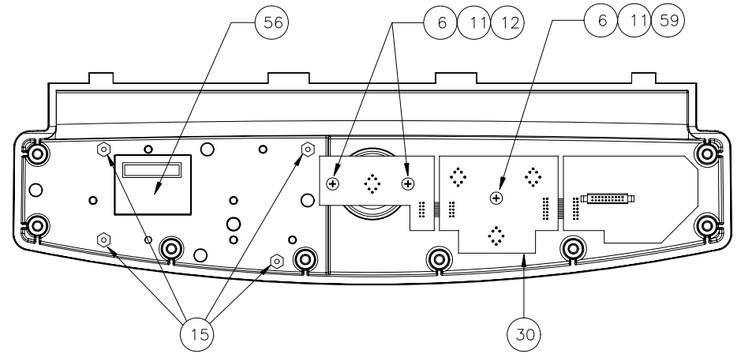


CN 8915M–2

| | | | | | | | |
|---|---|---|---|---|---|---|---|
| SURFACE TREATMENT ~ | EXCEPT AS NOTED: ALL CORNERS MUST BE AS FOLLOWS INSIDE: 1.3 X 45° OR 1.3 R MAX OUTSIDE: 0.8 X 45° OR 1.3 R | EXCEPT AS NOTED: ALL DIMENSIONS IN METRIC TOLERANCE DECIMAL .0 ±0.8 .00 ±0.4 .000 ±0.13 .0000 ±0.013 ANGULAR ± 0°30' | HURCO MANUFACTURING COMPANY, INC. INDIANAPOLIS, IN U.S.A. | | | | |
| HEAT TREATMENT ~ | | | DESCRIPTION: ASSY, DUAL TFT FLAT PANEL DISPLAY | | | | |
| FIRST USED ON: MAX4 | EXCEPT AS NOTED: WELDING TOLERANCE MUST BE AS FOLLOWS ±3 | THIRD ANGLE PROJECTION | DRAWN: JDN | DATE: 03–16–99 | CHECKED: PES | DATE: 03–17–99 | APPROVED: FWG / DATE: 03–19–99 |
| | | | SCALE: NONE / UNIT OF MEAS.: EA | SIZE: D | DRAWING: 007–3015–002 | SHT.: 2 OF 3 | REV.: D |

| SIZE | DRAWING | SHT. OF | REV. |
|---|---|---|---|
| D | 007-3015-002 | 3 OF 3 | D |

PROPRIETARY INFORMATION

INFORMATION CONTAINED HEREIN IS THE PROPERTY OF HURCO MANUFACTURING COMPANY, INC. NO REPRODUCTION OR DISCLOSURE OF THIS INFORMATION SHALL BE MADE BY THE RECIPIENT TO ANY OTHER PERSON OR ORGANIZATION WITHOUT THE PRIOR WRITTEN CONSENT OF HURCO MANUFACTURING COMPANY, INC.

REAR VIEW

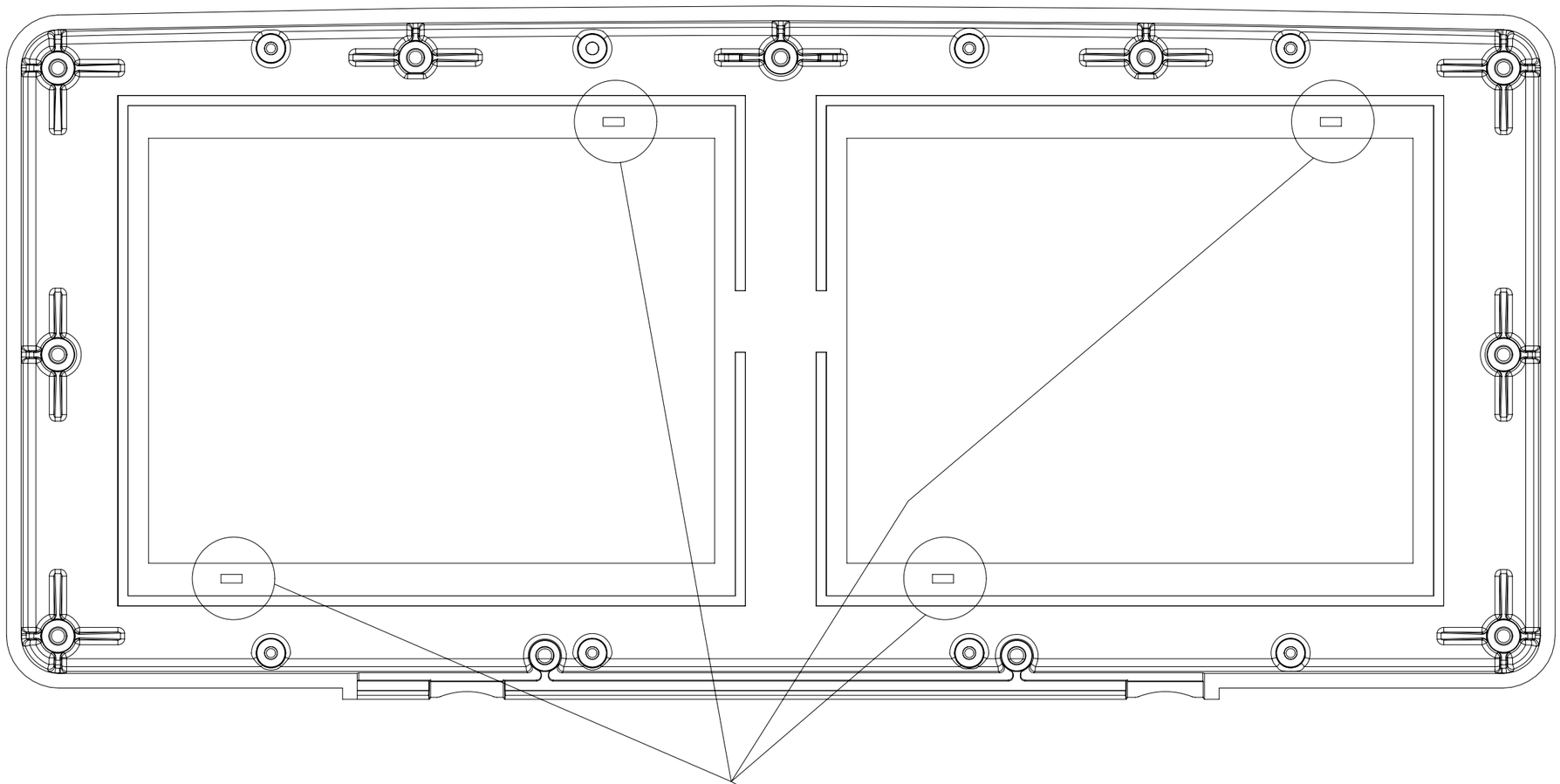

FILL IN THESE AREAS (VOIDS) – SEE PROCEDURE BELOW.

## PROCEDURE

Apply RTV to the four areas on the rear of the bezel as shown. The RTV must completely fill these voids to assure that the RTV will remain in place after curing. Allow the RTV to build up above the surface of the plastic as it is applied, but do not apply any RTV on the surface around the void. Do not wipe or use a tool to remove or level the RTV. Allow the RTV to cure undisturbed for six to eight hours. After the RTV has cured, use a sharp razor blade or Exacto knife to remove the excess RTV from the bezel surface. After trimming, the RTV must be level (flush) with the surface of the plastic to provide a smooth, flat surface. Repeat for all four areas on the bezel. This procedure provides a flat surface for the gasket of the glass and the touchscreen. Without this flat surface, the gasket will wrinkle.

CN 8915M-3

| | | | |
|---|---|---|---|
| SURFACE TREATMENT ~ | EXCEPT AS NOTED: ALL CORNERS MUST BE AS FOLLOWS INSIDE: 1.3 X 45° OR 1.3 R MAX OUTSIDE: 0.8 X 45° OR 1.3 R | EXCEPT AS NOTED: ALL DIMENSIONS IN METRIC TOLERANCE DECIMAL .0 ±0.8, .00 ±0.4, .000 ±0.13, .0000 ±0.013 ANGULAR ± 0°30' | HURCO MANUFACTURING COMPANY, INC. INDIANAPOLIS, IN U.S.A. |
| HEAT TREATMENT ~ | | | DESCRIPTION: ASSY, DUAL TFT FLAT PANEL DISPLAY |
| FIRST USED ON: MAX4 | EXCEPT AS NOTED: WELDING TOLERANCE MUST BE AS FOLLOWS ±3 | THIRD ANGLE PROJECTION | DRAWN: JDN 03-16-99; CHECKED: PES 03-17-99; APPROVED: FWG 03-19-99; SCALE: NONE; UNIT OF MEAS.: PC; SIZE: D; DRAWING: 007-3015-002; SHT. 3 OF 3; REV. D |

# Ass'y., Dual Flat Panel PEK, 007-3016-001—Rev. C

| SIZE | DRAWING | SHT. | REV. |
|---|---|---|---|
| D | 007-3016-001 | 1 OF 1 | C |

PROPRIETARY INFORMATION
INFORMATION CONTAINED HEREIN IS THE PROPERTY OF HURCO MANUFACTURING COMPANY, INC. NO REPRODUCTION OR DISCLOSURE OF THIS INFORMATION SHALL BE MADE BY THE RECIPIENT TO ANY OTHER PERSON OR ORGANIZATION WITHOUT THE PRIOR WRITTEN CONSENT OF HURCO MANUFACTURING COMPANY, INC.

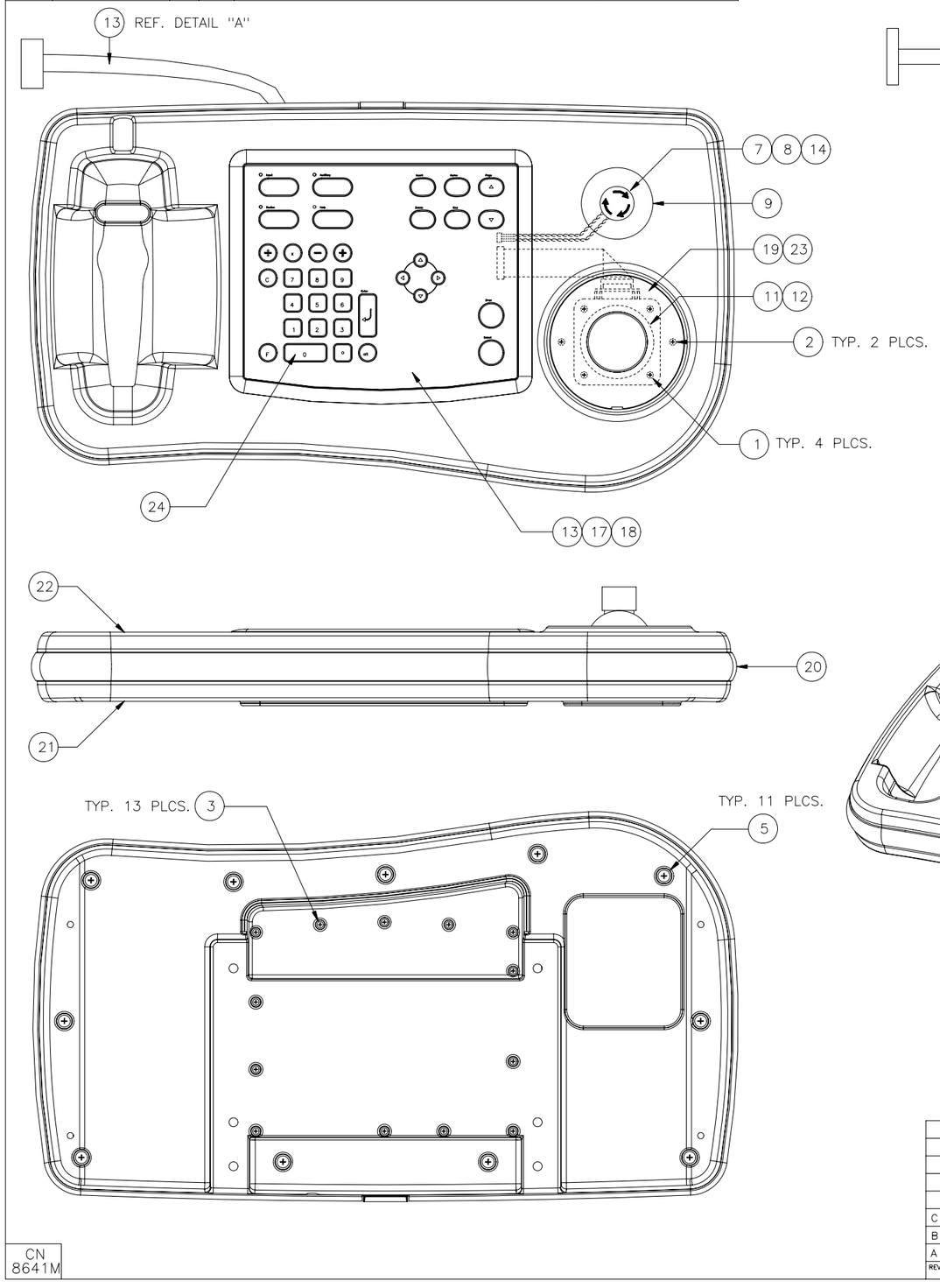


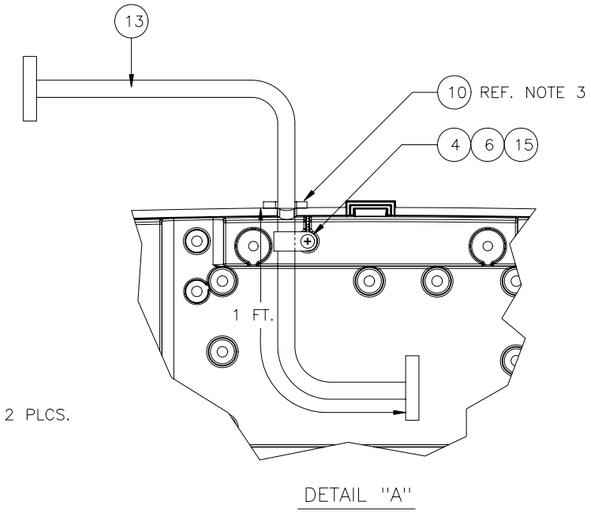


DETAIL "A"

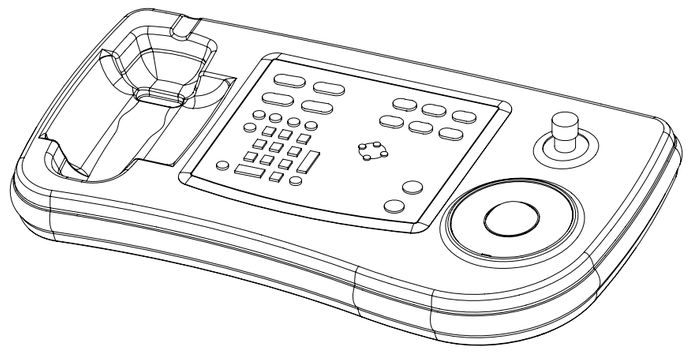

NOTES:

1. REFERENCE ENGINEERING DOCUMENT NO. 757-4002-162 /CAD NO. D8569 FOR DETAILED BUILD PROCEDURES.
2. USE ITEM 16 ADHESIVE TO ATTACH ITEM 20 RUBBER BUMPER.
3. ITEM 10 GROMMET IS SPLIT TO ALLOW ATTACHMENT TO ITEM 13 HARNESS BEFORE INSTALLATION IN ITEM 22 UPPER CASEPART.
4. (B1) 007-3023-001 MAX4 CONSOLE FASTENER KIT CONTAINS QTY. 6 PPHMS, M6 X 1 X 16, BLACK OXIDE 109-5026-005 AND QTY. 6 LOCKWASHER, M6 .3 EXT. 110-0066-011 USED TO MOUNT THIS ASSEMBLY TO PEK BRACKETS. THE KIT ALSO CONTAINS QTY. 4 BHSCS, M6 X10mm BLACK OXIDE 108-5004-001 USED TO MOUNT PEK BRACKETS TO THE YOKE.

| QTY. | PART NUMBER | ITEM DESCRIPTION | ITEM |
|---|---|---|---|
| | | | 25 |
| (C1) 1 | 807-0013-005 | KEYBOARD, PROGRAM ENTRY (ELASTOMER/GOLD PILL) | 24 |
| 1 | 807-0009-004 | CASEPART, (TRACKBALL) MOUNTING | 23 |
| 1 | 807-0009-003 | CASEPART, (UPPER) PROGRAMMING | 22 |
| 1 | 807-0009-002 | CASEPART, (LOWER) PROGRAMMING | 21 |
| 6.5 FT | 807-0007-001 | EXTRUSION, (KEYBOARD) RUBBER BUMPER | 20 |
| 1 | 703-1005-488 | OVERLAY, TRACKBALL | 19 |
| REF | 703-1005-460 | LABEL, GERMAN PROGRAM ENTRY | 18 |
| REF | 703-1005-457 | LABEL, ENGLISH PROGRAM ENTRY | 17 |
| REF | 702-0002-002 | ADHESIVE, CYANOACRYLATE | 16 |
| 1 | 602-0001-020 | CLAMP, 3/8" PLATED STEEL NEOPRENE CUSHION | 15 |
| 1 | 423-4401-178 | HARNESS, E-STOP CONSOLE (7") | 14 |
| 1 | 423-4401-177 | HARNESS, PROGRAM ENTRY TO FPN | 13 |
| 1 | 423-4401-175 | HARNESS, TRACKBALL | 12 |
| 1 | 416-0252-005 | ENCODER, TRACKBALL | 11 |
| 1 | 408-8001-061 | GROMMET, SLIT RUBBER 3/8 X 1/4 X 1/2 X 1/2 | 10 |
| (B2) 1 | 703-1005-490 | LABEL, EMERGENCY STOP SWITCH | 9 |
| 1 | 404-7502-006 | CONTACT BLOCK, SLIM E-STOP SWITCH | 8 |
| 1 | 404-7502-005 | ACTUATOR, SLIM E-STOP SWITCH | 7 |
| 1 | 110-0066-011 | LOCKWASHER, M6 .3 EXT. | 6 |
| 11 | 109-5026-005 | PPHMS, M6 X 1 X 16, BLACK OXIDE | 5 |
| 1 | 109-5026-003 | PPHMS, M6 X 12mm, BLACK OXIDE | 4 |
| 13 | 109-5022-004 | PPHMS, M3 X 8, BLACK OXIDE | 3 |
| 2 | 102-5001-003 | FHSCS, M3 X 10 DIN 7991 | 2 |
| 4 | 102-0002-002 | FHSCS, 6-32 X 3/8" | 1 |

PARTS LIST

| REV | E.C.N. NO. | REVISION DESCRIPTION | REV BY | DATE | CHK BY | DATE | APPD BY | DATE | DF |
|---|---|---|---|---|---|---|---|---|---|
| C | 14884 | C1) ITEM 24 P/N WAS 807-0013-002; | PES | 10 MAR 1998 | JDN | 10 MAR 1998 | | | |
| B | 14309 | B1) ADDED LAST SENTENCE TO NOTE 4, B2) ITEM 9 WAS 404-7502-007. | PES | JUNE 1998 | JDN | JUNE 1998 | FWG | JULY 1998 | |
| A | 14140 | REL | | | | | | | |

SURFACE TREATMENT

HEAT TREATMENT

FIRST USED ON: MAX4

EXCEPT AS NOTED: ALL CORNERS MUST BE AS FOLLOWS
INSIDE: 1.3 X 45° OR 1.3 R MAX
OUTSIDE: 0.8 X 45° OR 1.3 R

EXCEPT AS NOTED: WELDING TOLERANCE MUST BE AS FOLLOWS ±3

EXCEPT AS NOTED: ALL DIMENSIONS IN METRIC TOLERANCE
DECIMAL
.0 ±0.8
.00 ±0.4
.000 ±0.13
.0000 ±0.013
ANGULAR ± 0°30'

THIRD ANGLE PROJECTION

HURCO MANUFACTURING COMPANY, INC.
INDIANAPOLIS, IN U.S.A.

DESCRIPTION: ASSY, DUAL FLAT PANEL PEK

| DRAWN | DATE | CHECKED | DATE | APPROVED | DATE |
|---|---|---|---|---|---|
| JCR | 04/15/98 | JDN | 04/30/98 | FWG | 5/1/98 |

| SCALE | SIZE | DRAWING | SHT. | REV. |
|---|---|---|---|---|
| NONE | D | 007-3016-001 | 1 OF 1 | C |

UNIT OF MEAS.: EA

CN 8641M

# Ass'y., Detented Jog, 007-3017-001—Rev. D

| SIZE | DRAWING | SHT. | REV. |
|---|---|---|---|
| D | 007-3017-001 | 1 OF 1 | D |

PROPRIETARY INFORMATION
INFORMATION CONTAINED HEREIN IS THE PROPERTY OF HURCO MANUFACTURING COMPANY, INC. NO REPRODUCTION OR DISCLOSURE OF THIS INFORMATION SHALL BE MADE BY THE RECIPIENT TO ANY OTHER PERSON OR ORGANIZATION WITHOUT THE PRIOR WRITTEN CONSENT OF HURCO MANUFACTURING COMPANY, INC.

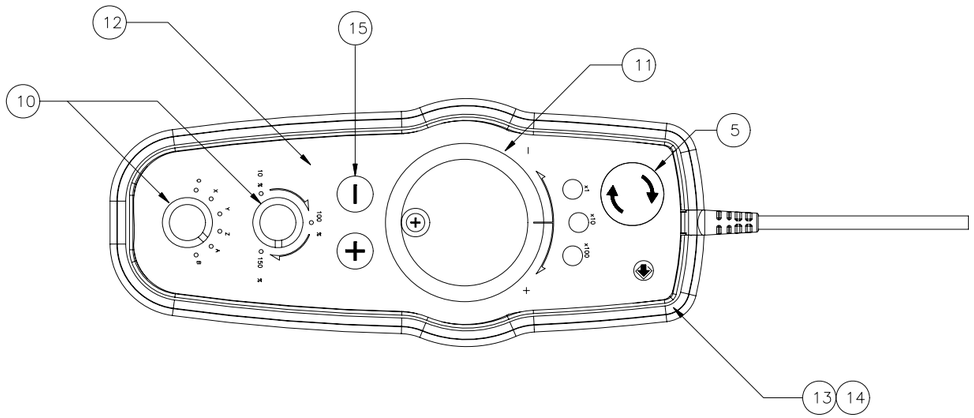


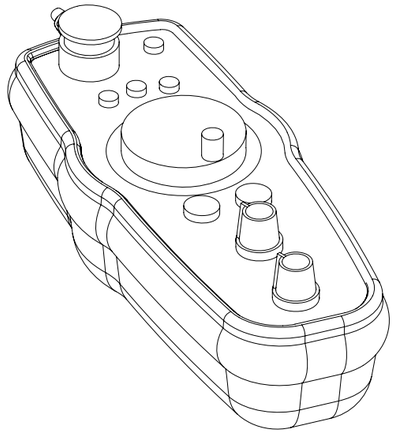

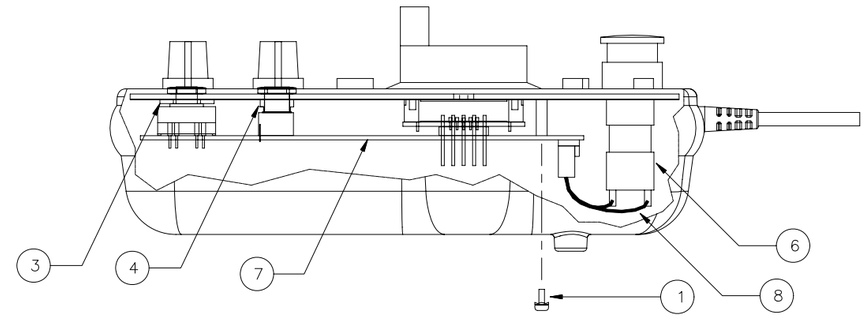

TYP. 2 PLCS.

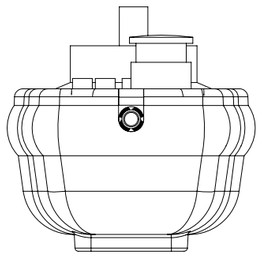

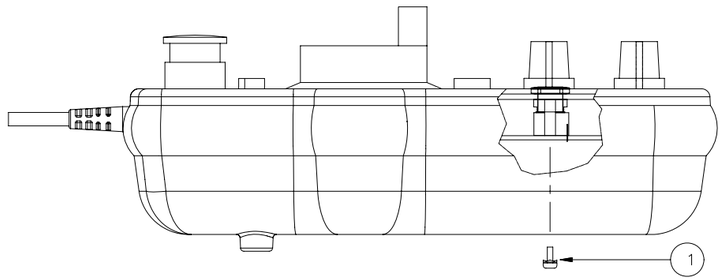


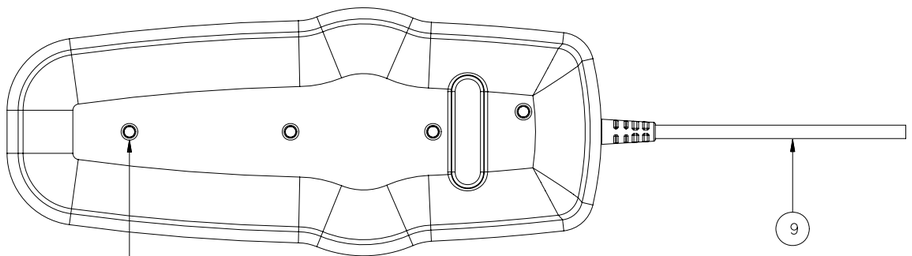

TYP. 4 PLCS.

NOTES:
1. REF ENGINEERING DOCUMENT NO. 757-4002-163 /CAD NO. D8570 FOR DETAILED BUILD PROCEDURES.
2. ITEM 12 TO BE INSTALLED BY KEYBOARD VENDOR.

| | QTY. | PART NUMBER | ITEM DESCRIPTION | ITEM |
|---|---|---|---|---|
| | | | PARTS LIST | |
| D | 1 | 807-0013-006 | KEYBOARD, REMOTE JOG (ELASTOMER/GOLD PILL) | 15 |
| | 1 | 807-0010-001 | BOOT, (REMOTE) JOG RUBBER | 14 |
| | 1 | 807-0009-005 | CASEPART, (REMOTE1) JOG | 13 |
| | REF | 703-1005-456 | LABEL, DETENTED JOG | 12 |
| | 1 | 603-1001-028 | KNOB, 100 POS. GRADUATED SPINNER | 11 |
| | 2 | 603-1001-027 | KNOB, 3/4" SKIRTED 1/4" SHAFT | 10 |
| | 1 | 423-4401-180 | HARNESS, REMOTE JOG MAX 4 (COILED) | 9 |
| | 1 | 423-4401-179 | HARNESS, E-STOP 2" | 8 |
| | 1 | 415-0626-001 | PCB ASSY, DETENTED JOG NODE | 7 |
| | 1 | 404-7502-009 | CONTACT BLOCK, SMALL MUSHROOM E-STOP SWITCH | 6 |
| | 1 | 404-7502-008 | ACTUATOR, SMALL MUSHROOM E-STOP SWITCH | 5 |
| C2 B | REF | 212-0003-003 | SPACER, SHOULDER WASHER, .377 ID X .205 L | 4 |
| C1 | REF | 110-0121-002 | SPACER, .375 ID X .0938 L AL, CLEAR IRRIDITE | 3 |
| | 4 | 109-5024-003 | PPHMS, M4 X 0.7 X 8mm, BLACK OXIDE | 2 |
| | 2 | 109-5008-013 | PPHMS, M3 X 8 W/EXT LOCK WASHER SEMS | 1 |

| REV | E.C.N. NO. | REVISION DESCRIPTION | REV BY | DATE | CHK BY | DATE | APPD BY | DATE | DF |
|---|---|---|---|---|---|---|---|---|---|
| D | 14884 | D1) ITEM 15 P/N WAS 807-0013-003; | PES | 10 MAR 2000 | JDN | 10 MAR 2000 | | | |
| C | 14773 | C1: ITEM 3 WAS QTY. 1; C2: ITEM 4 WAS QTY. 1; | PES | 07 JAN 2000 | JDN | 07 JAN 2000 | FWG | 07 JAN 2000 | |
| B | 14309 | ITEM 4 WAS 110-0121-003. | JDN | 07 98 | PES | 01 JUNE 98 | FWG | 07 98 | |
| A | 14140 | RELEASE | | | | | | | |

SURFACE TREATMENT

HEAT TREATMENT

FIRST USED ON: MAX4

EXCEPT AS NOTED: ALL CORNERS MUST BE AS FOLLOWS
INSIDE: 1.3 X 45° OR 1.3 R MAX
OUTSIDE: 0.8 X 45° OR 1.3 R

EXCEPT AS NOTED: WELDING TOLERANCE MUST BE AS FOLLOWS ±3

EXCEPT AS NOTED: ALL DIMENSIONS IN METRIC TOLERANCE
DECIMAL
.0 ±0.8
.00 ±0.4
.000 ±0.13
.0000 ±0.013
ANGULAR ± 0°30'

THIRD ANGLE PROJECTION

HURCO MANUFACTURING COMPANY, INC.
INDIANAPOLIS, IN U.S.A.

DESCRIPTION: ASSY, DETENTED JOG

| DRAWN | DATE | CHECKED | DATE | APPROVED | DATE |
|---|---|---|---|---|---|
| JGR | 04/15/98 | JDN | 04/30/98 | FWG | 05/04/98 |

| SCALE | SIZE | DRAWING | SHT. | REV. |
|---|---|---|---|---|
| NONE | D | 007-3017-001 | 1 OF 1 | D |

UNIT OF MEAS.: EA

CN 8638M

# Electrical and Mechanical Schematics

## Hurco VM1 Machining Center

Schematic, Coolant, . . . . . .003-0101-016—Rev. A . . . . Page 3 - 2
Schematic, Pneumatic, . . . . . .003-0101-017—Rev. A . . . . Page 3 - 3
Schematic, Lubrication, VM 1, . . . . . .003-0101-018—Rev. A . . . . Page 3 - 4
Schematics, VM1, VM2, VM3, VM1G,. . . . .003-2022-011—Rev. K . . . . Page 3 - 5

| SIZE | DRAWING | SHT. | REV. | PROPRIETARY INFORMATION |
|---|---|---|---|---|
| C | 003–0101–016 | 1 OF 1 | A | INFORMATION CONTAINED HEREIN IS THE PROPERTY OF HURCO MANUFACTURING COMPANY, INC. NO REPRODUCTION OR DISCLOSURE OF THIS INFORMATION SHALL BE MADE BY THE RECIPIENT TO ANY OTHER PERSON OR ORGANIZATION WITHOUT THE PRIOR WRITTEN CONSENT OF HURCO MANUFACTURING COMPANY, INC. |

4Ra=S
Ra
32–125
8.0–25
2.0–6.3
0.25–1.6
0.07–0.2

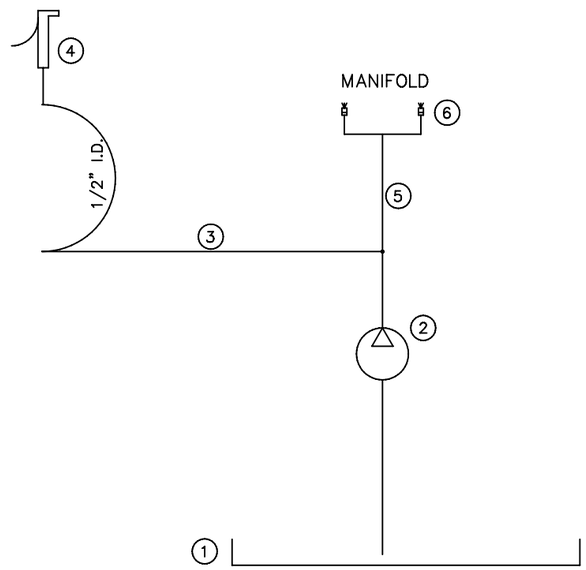


| QTY. | PART NUMBER | ITEM DESCRIPTION | ITEM |
|---|---|---|---|
| | | PARTS LIST | |
| 2 REF | 003–0109–002 | ASS'Y, NOZZLE, WASHDOWN, 1/4" PT ROUND | 6 |
| 1 REF | 507–0001–014 | HOSE, WATER, PVC 1/2" | 5 |
| 1 REF | 513–5006–023 | NOZZLE, SPRAY (LS–QGF3000) | 4 |
| 1 REF | 507–1206–134 | HOSE, 3500mm, WASHDOWN | 3 |
| 1 REF | 503–0001–021 | PUMP, COOLANT YC–4150 | 2 |
| 1 REF | 803–0115–001 | TANK, COOLANT | 1 |

| REV | P.I.N. NO. | REVISION DESCRIPTION | REV BY | DATE | CHK BY | DATE | APPD BY | DATE | DF |
|---|---|---|---|---|---|---|---|---|---|
| A | 15517 | REL | | | | | | | |

SURFACE TREATMENT

HEAT TREATMENT

FIRST USED ON
VM1

EXCEPT AS NOTED:
ALL CORNERS MUST BE AS FOLLOWS
INSIDE:
1.3 X 45° OR
1.3 R MAX
OUTSIDE:
0.8 X 45° OR
1.3 R

EXCEPT AS NOTED:
WELDING TOLERANCE MUST BE AS FOLLOWS
±3

EXCEPT AS NOTED:
ALL DIMENSIONS IN METRIC TOLERANCE
DECIMAL
.0 ±0.8
.00 ±0.4
.000 ±0.13
.0000 ±0.013
ANGULAR ± 0°30'

THIRD ANGLE PROJECTION

HURCO MANUFACTURING COMPANY, INC.
INDIANAPOLIS, IN U.S.A.

DESCRIPTION
SCHEMATIC, COOLANT

| DRAWN | DATE | CHECKED | DATE | APPROVED | DATE |
|---|---|---|---|---|---|
| KEN | 07–03–02 | MLE | 07–05–02 | JLW | 10–10–02 |

| SCALE | SIZE | DRAWING | SHT. | REV. |
|---|---|---|---|---|
| NA | C | 003–0101–016 | 1 OF 1 | A |

UNIT OF MEAS.
EA

| SIZE | DRAWING | SHT. | REV. |
|---|---|---|---|
| C | 003–0101–017 | 1 OF 1 | A |

PROPRIETARY INFORMATION

INFORMATION CONTAINED HEREIN IS THE PROPERTY OF HURCO MANUFACTURING COMPANY, INC. NO REPRODUCTION OR DISCLOSURE OF THIS INFORMATION SHALL BE MADE BY THE RECIPIENT TO ANY OTHER PERSON OR ORGANIZATION WITHOUT THE PRIOR WRITTEN CONSENT OF HURCO MANUFACTURING COMPANY, INC.

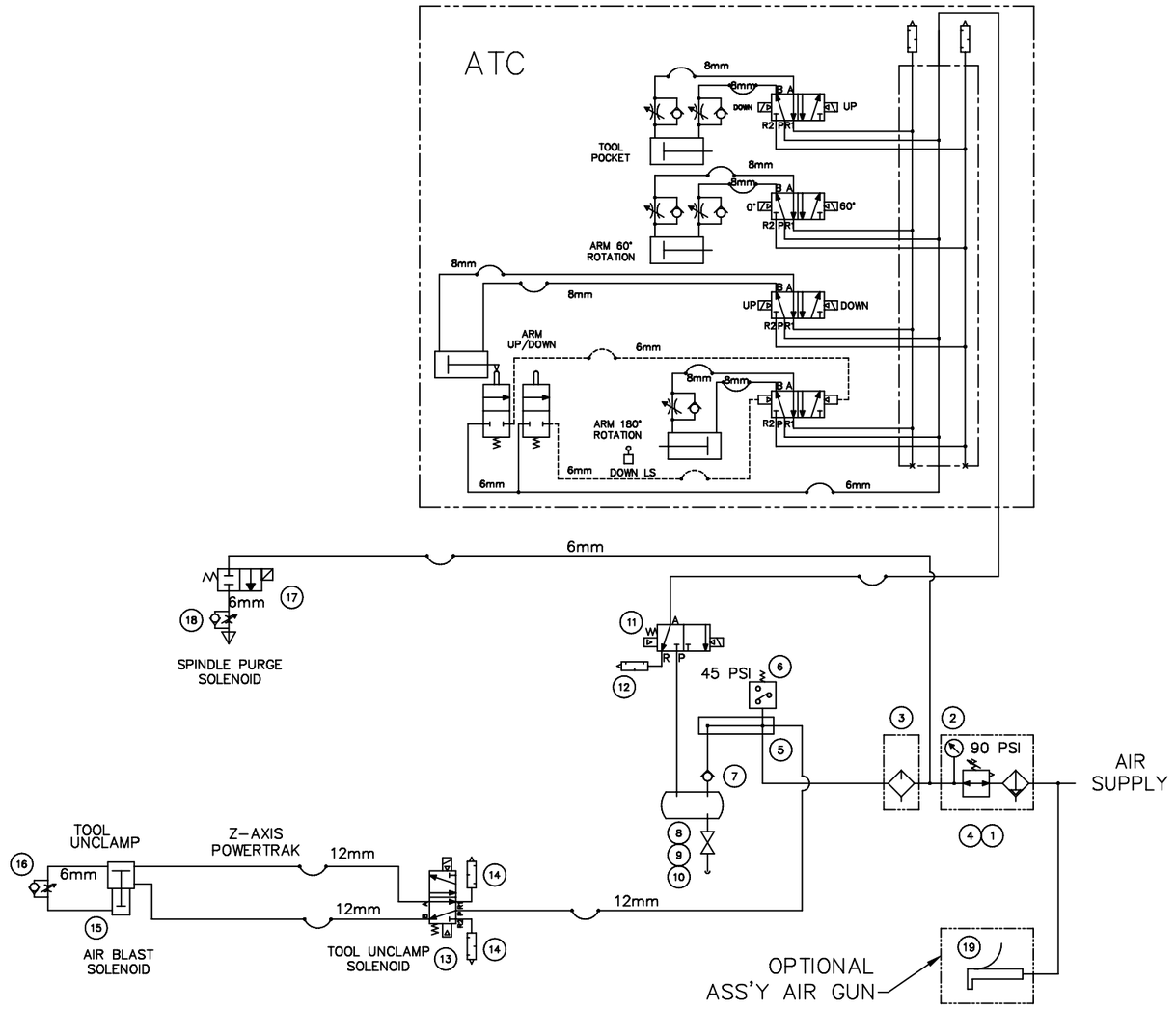


| QTY. | PART NUMBER | ITEM DESCRIPTION | ITEM |
|---|---|---|---|
| | | PARTS LIST | |
| 1REF | 513–5006–026 | GUN, AIR W/COUPLING | 19 |
| 1REF | 502–0027–006 | CONTROL, FLOW, 6.0 DIA TUBE x 1/4" PT M | 18 |
| 1REF | 403–6001–014 | VALVE, SOLENOID | 17 |
| 1REF | 502–0027–015 | CONTROL, FLOW, 6.0 DIA TUBE x 1/8" PT M | 16 |
| 1REF | 003–1003–001 | ASS'Y, UNCLAMP CYLINDER | 15 |
| 1REF | 503–0502–020 | MUFFLER, EXHAUST, 3/8"PT M | 14 |
| 1REF | 403–6001–015 | VALVE, SOLENOID | 13 |
| 1REF | 503–0502–019 | MUFFLER, 3/8"PT, SHORT | 12 |
| 1REF | 502–0001–009 | VALVE, SOL. 3–PORT 2 POSTION | 11 |
| 1REF | 502–0129–016 | VALVE, SHUT–OFF | 10 |
| 1REF | 506–6050–003 | NIPPLE, HEX 1/4" PT M | 9 |
| 1REF | 512–0041–004 | TANK, PRESSURE | 8 |
| 1REF | 502–0130–017 | VALVE, CHECK, INLINE 3/8" PT F | 7 |
| 1REF | 510–0001–008 | SWITCH, PRESSURE NICHIDEN | 6 |
| 1REF | 803–1029–001 | BLOCK, PNEUMATIC | 5 |
| 1REF | 513–5004–014 | BRACKET, FILTER/REGULAOR | 4 |
| 1REF | 513–0121–004 | LUBRICATOR | 3 |
| 1REF | 514–5001–007 | GAUGE, PRESSURE | 2 |
| 1REF | 513–0444–004 | UNIT, FILTER/REGULATOR | 1 |

| REV | E.C.N. NO. | REVISION DESCRIPTION | REV BY | DATE | CHK BY | DATE | APPD BY | DATE | DF |
|---|---|---|---|---|---|---|---|---|---|
| A | 15486 | REL | | | | | | | |

SURFACE TREATMENT

HEAT TREATMENT

FIRST USED ON VM 1

EXCEPT AS NOTED: ALL CORNERS MUST BE AS FOLLOWS
INSIDE: 1.3 X 45° OR 1.3 R MAX
OUTSIDE: 0.8 X 45° OR 1.3 R

EXCEPT AS NOTED: WELDING TOLERANCE MUST BE AS FOLLOWS ±3

EXCEPT AS NOTED: ALL DIMENSIONS IN METRIC TOLERANCE
DECIMAL
.0 ±0.8
.00 ±0.4
.000 ±0.13
.0000 ±0.013
ANGULAR ± 0°30'

THIRD ANGLE PROJECTION

HURCO MANUFACTURING COMPANY, INC.
INDIANAPOLIS, IN U.S.A.

DESCRIPTION: SCHEMATIC, PNEUMATIC

| DRAWN | DATE | CHECKED | DATE | APPROVED | DATE |
|---|---|---|---|---|---|
| Kevin | 07–31–02 | MLE | 07–31–02 | JLW | 09–26–02 |

| SCALE | SIZE | DRAWING | SHT. | REV. |
|---|---|---|---|---|
| 1=1 | C | 003–0101–017 | 1 OF 1 | A |

UNIT OF MEAS. EA

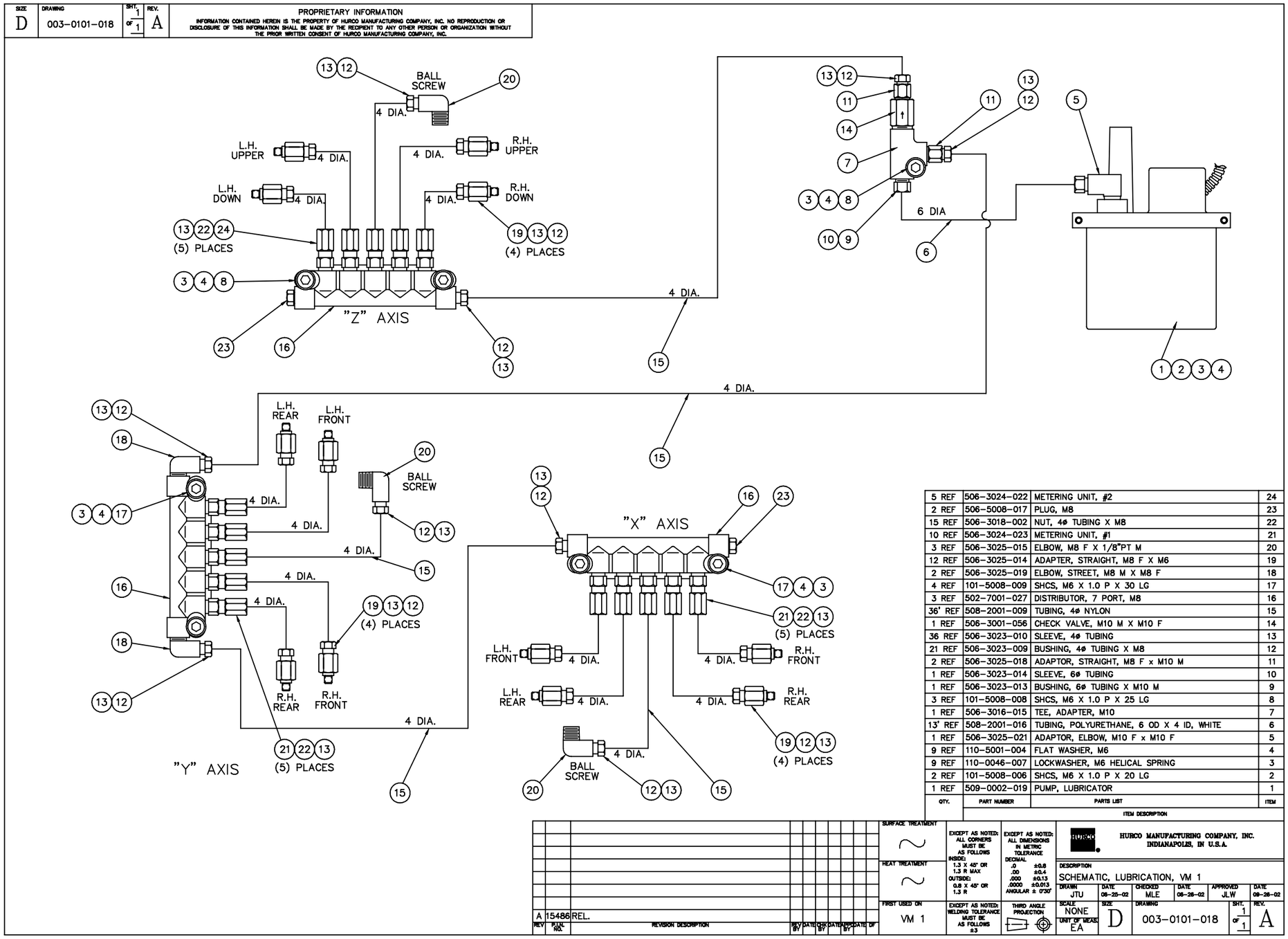


| QTY. | PART NUMBER | PARTS LIST | ITEM |
|---|---|---|---|
| | | ITEM DESCRIPTION | |
| 5 REF | 506-3024-022 | METERING UNIT, #2 | 24 |
| 2 REF | 506-5008-017 | PLUG, M8 | 23 |
| 15 REF | 506-3018-002 | NUT, 4ø TUBING X M8 | 22 |
| 10 REF | 506-3024-023 | METERING UNIT, #1 | 21 |
| 3 REF | 506-3025-015 | ELBOW, M8 F X 1/8"PT M | 20 |
| 12 REF | 506-3025-014 | ADAPTER, STRAIGHT, M8 F X M6 | 19 |
| 2 REF | 506-3025-019 | ELBOW, STREET, M8 M X M8 F | 18 |
| 4 REF | 101-5008-009 | SHCS, M6 X 1.0 P X 30 LG | 17 |
| 3 REF | 502-7001-027 | DISTRIBUTOR, 7 PORT, M8 | 16 |
| 36' REF | 508-2001-009 | TUBING, 4ø NYLON | 15 |
| 1 REF | 506-3001-056 | CHECK VALVE, M10 M X M10 F | 14 |
| 36 REF | 506-3023-010 | SLEEVE, 4ø TUBING | 13 |
| 21 REF | 506-3023-009 | BUSHING, 4ø TUBING X M8 | 12 |
| 2 REF | 506-3025-018 | ADAPTOR, STRAIGHT, M8 F x M10 M | 11 |
| 1 REF | 506-3023-014 | SLEEVE, 6ø TUBING | 10 |
| 1 REF | 506-3023-013 | BUSHING, 6ø TUBING X M10 M | 9 |
| 3 REF | 101-5008-008 | SHCS, M6 X 1.0 P X 25 LG | 8 |
| 1 REF | 506-3016-015 | TEE, ADAPTER, M10 | 7 |
| 13' REF | 508-2001-016 | TUBING, POLYURETHANE, 6 OD X 4 ID, WHITE | 6 |
| 1 REF | 506-3025-021 | ADAPTOR, ELBOW, M10 F x M10 F | 5 |
| 9 REF | 110-5001-004 | FLAT WASHER, M6 | 4 |
| 9 REF | 110-0046-007 | LOCKWASHER, M6 HELICAL SPRING | 3 |
| 2 REF | 101-5008-006 | SHCS, M6 X 1.0 P X 20 LG | 2 |
| 1 REF | 509-0002-019 | PUMP, LUBRICATOR | 1 |

| REV | P.I.N. NO. | REVISION DESCRIPTION | REV BY | DATE | CHK BY | DATE | APPROVED BY | DATE |
|---|---|---|---|---|---|---|---|---|
| A | 15486 | REL. | | | | | | |

SIZE D | DRAWING 003-0101-018 | SHT. 1 OF 1 | REV. A

PROPRIETARY INFORMATION
INFORMATION CONTAINED HEREIN IS THE PROPERTY OF HURCO MANUFACTURING COMPANY, INC. NO REPRODUCTION OR DISCLOSURE OF THIS INFORMATION SHALL BE MADE BY THE RECIPIENT TO ANY OTHER PERSON OR ORGANIZATION WITHOUT THE PRIOR WRITTEN CONSENT OF HURCO MANUFACTURING COMPANY, INC.

SURFACE TREATMENT
HEAT TREATMENT
FIRST USED ON: VM 1

EXCEPT AS NOTED: ALL CORNERS MUST BE AS FOLLOWS
INSIDE: 1.3 X 45° OR 1.3 R MAX
OUTSIDE: 0.8 X 45° OR 1.3 R

EXCEPT AS NOTED: ALL DIMENSIONS IN METRIC TOLERANCE
DECIMAL
.0 ±0.8
.00 ±0.4
.000 ±0.13
.0000 ±0.013
ANGULAR ± 0°30'

EXCEPT AS NOTED: WELDING TOLERANCE MUST BE AS FOLLOWS ±3

THIRD ANGLE PROJECTION

HURCO MANUFACTURING COMPANY, INC.
INDIANAPOLIS, IN U.S.A.

DESCRIPTION: SCHEMATIC, LUBRICATION, VM 1

| DRAWN | DATE | CHECKED | DATE | APPROVED | DATE |
|---|---|---|---|---|---|
| JTU | 08-25-02 | MLE | 08-26-02 | JLW | 08-26-02 |

SCALE: NONE | UNIT OF MEAS: EA | SIZE: D | DRAWING: 003-0101-018 | SHT. 1 OF 1 | REV. A

HURCO

| SIZE | DRAWING | SHT | REV. |
|---|---|---|---|
| D | 003-2022-011 | 1 OF 16 | K |

PROPRIETARY INFORMATION
INFORMATION CONTAINED HEREIN IS THE PROPERTY OF HURCO MANUFACTURING COMPANY, INC. NO REPRODUCTION OR DISCLOSURE OF THIS INFORMATION SHALL BE MADE BY THE RECIPIENT TO ANY OTHER PERSON OR ORGANIZATION WITHOUT THE PRIOR WRITTEN CONSENT OF HURCO MANUFACTURING COMPANY, INC.

INDEX

LIMIT SWITCH

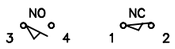


FLOAT SWITCH

PRESSURE SWITCH

FUSE

CIRCUIT BREAKER

SOLENOID

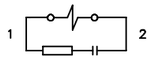


RELAY COIL

N.O. CONTACT

N.C. CONTACT

OVERLOAD

INDICATOR

PUSHBUTTON

ELECTRICAL DIAGRAMS FOR VM1, VM2, VM3, AND VM1G YASKAWA SIGMA II DRIVES


| | | | |
|---|---|---|---|
| | 1 | INDEX, ELECTRICAL DIAGRAMS | 003-2022-011 |
| | 2 | SCHEMATIC, POWER DISTRIBUTION 1 | 003-2022-011 |
| | 3 | SCHEMATIC, POWER DISTRIBUTION 2 | 003-2022-011 |
| | 4 | SCHEMATIC, X-AXIS SUBSYSTEM | 003-2022-011 |
| | 5 | SCHEMATIC, Y-AXIS SUBSYSTEM | 003-2022-011 |
| | 6 | SCHEMATIC, Z-AXIS SUBSYSTEM (VM1 EDITION 1) | 003-2022-011 |
| | 7 | SCHEMATIC, SPINDLE SUBSYSTEM (VM1/2/3, MC5 INVERTER) | 003-2022-011 |
| | 8 | SCHEMATIC, SPINDLE SUBSYSTEM (VM1/2/3, 10K OPTION, MC5) | 003-2022-011 |
| | 9 | SCHEMATIC, MISCELLANEOUS IO 1 | 003-2022-011 |
| | 10 | SCHEMATIC, MISCELLANEOUS IO 2 | 003-2022-011 |
| | 11 | SCHEMATIC, ATC SUBSYSTEMS | 003-2022-011 |
| | 12 | SCHEMATIC, CE MACHINES, SAFETY | 003-2022-011 |
| C7 | 13 | SCHEMATIC, Z-AXIS SUBSYSTEM (VM1 ED.2/VM2/VM3/VM1G) | 003-2022-011 |
| D2 | 14 | SCHEMATIC, SPINDLE SUBSYSTEM (VM1G) | 003-2022-011 |
| G7 | 15 | SCHEMATIC, SPINDLE SUBSYSTEM (VM1/2/3, F7 INVERTER) | 003-2022-011 |
| G7 | 16 | SCHEMATIC, SPINDLE SUBSYSTEM (VM1/2/3, 10K OPT. F7 INV.) | 003-2022-011 |


CROSS REFERENCE SYMBOL

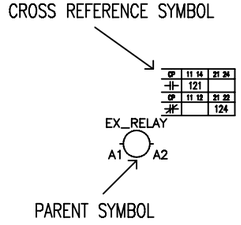


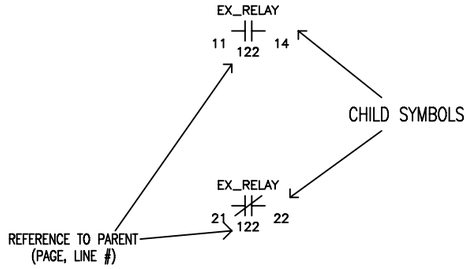


| | |
|---|---|
| TB1-1 | +24V SW |
| TB1-2 | +24V |
| TB1-3 | MGND |
| TB1-4,TB1-5,TB1-6,TB1-7 | X-AXIS LIMIT SW |
| TB1-8,TB1-9,TB1-10,TB1-11 | Y-AXIS LIMIT SW |
| TB1-12,TB1-13,TB1-14,TB1-15 | Z-AXIS LIMIT SW |
| TB1-19 | MGND SW |

| REV | P.N. | REVISION DESCRIPTION | BY | DATE | CHK BY | DATE | APPR BY | DATE | DF |
|---|---|---|---|---|---|---|---|---|---|
| K | 15962 | 2) REVISED REF. DESGS. SPINDLE MOTOR ENCODER SIDE AND PROX WIRING/JUMPER. 1) REVISED REF. DESGS. SPINDLE MOTOR ENCODER SIDE; | DEO | NOV 05 | DEO | DEC 05 | | | |
| J | 15907 | 3) ADDED FRT RELAY, P.14,15,16; 4) REVERSED REFERENCE DESIGNATIONS 1) WAS BLK2-34 +24VSW, P.14,15,16; 2) WAS TB1-1, P.14,15,16 | SJT | SEP 05 | DEO | SEP 05 | DEO | JY SEP 05 | |
| H | 15851 | 7) ADDED ELECTRICAL DIAGRAM SHTS. FOR F7 STD AND F7 10K OPT. 5) ADDED RMB ESTOP FUNCTION, 6) REVISED TDR REF. DESG., 3) MODIFIED SPINDLE TERMINAL REF. DESG., 4) CHG TO SCC CONTACTOR CONTROL. 1) MODIFIED SERVO TERMINAL REF. DESG., 2) ADDED RMB REFERENCE. | DEO | 12 MAY 05 | SJT | 18 MAY 05 | | | |
| G | 15838 | REMOVED FLOW SWITCH, P.10 | SJT | JUN 05 | DEO | JUN 05 | DEO | JUN 05 | |
| F | 15838 | 3) ADDED NOTE FOR CE, P.14; 4) REMOVED FLOW SW, P.10 1) ADDED SPINDLE ZERO SPEED INPUT CONNECTION, P.14; 2) WAS TB1-2, P.14 | SJT | JUN 05 | DEO | JUN 05 | DEO | JUN 05 | |
| E | 15712 | 1) WAS 20A, P.2; 2) TDR ADDED TO VM1G, P.9; 3) WAS 10,P.10; 4) WAS 11,P.10 | SJT | OCT 04 | DEO | NOV 04 | DEO | NOV 04 | |
| D | 15717 | 1) VM3 ADDITIONS, P.2,3,7,8,9,11,13; 2) VM1G ADDITIONS, P.2,3,9,10,11,13,14 | SJT | MAR 04 | DEO | MAR 04 | DEO | MAR 04 | |
| C | 15508 | 10) ORT11 WAS CONNECTED TO SER14, P.7,8; 11) TERMS WERE MISNUMBERED, P.11 8) WAS 200W FOR VM2/VMX2, P.1; 9) ADDED OPTIONAL OUTPUTS; P.7,8,10 7) ADD Z-AXIS SUBSYSTEM FOR VM1 EDITION 2 & VM2, P.1,13 6) WAS ONE 2000W RESISTOR, P.7,8 5) ADDED BRAKING UNIT FOR VM2/VMX2 MC5, P.7,8; 4) ADDED TERMINAL DESIGNATIONS FOR VM2/VMX2 MC5: B1&B2 FOR VM1/VMX1, +3 & – FOR VM2/VMX2, PAGE 7,8 3) ADD Z-AXIS DETAILS FOR VM1/VMX1 EDITION 2, P. 2 1) WAS 40 AMP(VM2/VMX2), P.2; 2) WAS 20 AMP(VM1/VMX1)/30 AMP(VM2/VMX2),P.2 | SJT | 18 NOV 02 | DEO | 18 NOV 02 | DEO | 18 NOV 02 | |
| B | 15516 | 4) ADDED CAPACITOR FILTER FOR 10K SYSTEM (407-0001-011), PAGE 8 3) CORRECTED ERROR: TB1-13,TB1-12 WERE CONNECTED TO WRONG I/O POINTS,P.8 2) CORRECTED ERROR: TB1-9, TB1-8 WERE CONNECTED TO WRONG I/O POINTS, P.5 1) ADDED REFERENCES FOR VM2 C.B., FUSES, RESISTORS, & MOTORS, POS 2,3,7,8,9 | SJT | 11 OCT 02 | DEO | 14 OCT 02 | DEO | 14 OCT 02 | |
| A | 15352 | RELEASE | SJT | 11 OCT 01 | DEO | 14 OCT 01 | DEO | 14 OCT 01 | |

SURFACE TREATMENT ~

HEAT TREATMENT ~

FIRST USED ON VM1

EXCEPT AS NOTED: ALL CORNERS MUST BE AS FOLLOWS
INSIDE: .050" X 45° OR .05" R MAX
OUTSIDE: .030" X 45° OR .05" R

EXCEPT AS NOTED: WELDING TOLERANCE MUST BE AS FOLLOWS ±.12

EXCEPT AS NOTED: ALL DIMENSIONS IN INCHES TOLERANCE
DECIMAL
.0 ±.0300
.00 ±.0150
.000 ±.0050
.0000 ±.0005
ANGULAR ± 0°30'

THIRD ANGLE PROJECTION

HURCO MANUFACTURING COMPANY, INC.
INDIANAPOLIS, IN U.S.A.

DESCRIPTION: SCHEMATICS, VM1, VM2, VM3, VM1G

| DRAWN | DATE | CHECKED | DATE | APPROVED | DATE |
|---|---|---|---|---|---|
| SJT | 8/12/02 | DEO | 8/13/02 | DEO | 8/13/02 |

| SCALE | SIZE | DRAWING | SHT | REV. |
|---|---|---|---|---|
| NONE | D | 003-2022-011 | 1 OF 16 | K |

UNIT OF MEAS. EA

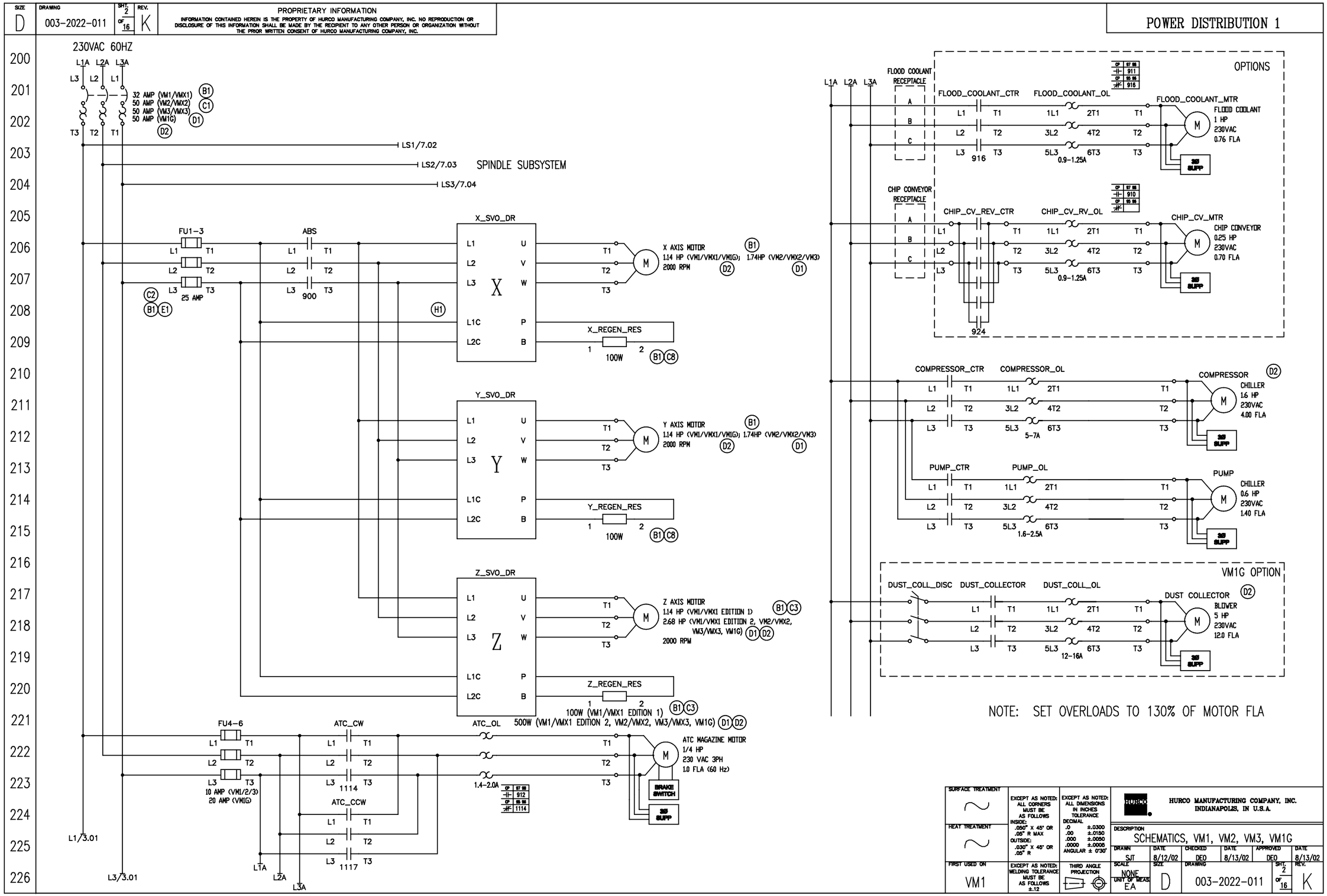
SIZE D
DRAWING 003-2022-011
SHT. 2 OF 16
REV. K
PROPRIETARY INFORMATION
INFORMATION CONTAINED HEREIN IS THE PROPERTY OF HURCO MANUFACTURING COMPANY, INC. NO REPRODUCTION OR DISCLOSURE OF THIS INFORMATION SHALL BE MADE BY THE RECIPIENT TO ANY OTHER PERSON OR ORGANIZATION WITHOUT THE PRIOR WRITTEN CONSENT OF HURCO MANUFACTURING COMPANY, INC.
POWER DISTRIBUTION 1
230VAC 60HZ
32 AMP (VM1/VMX1)
50 AMP (VM2/VMX2)
50 AMP (VM3/VMX3)
50 AMP (VM1G)
LS1/7.02
LS2/7.03
LS3/7.04
SPINDLE SUBSYSTEM
FU1-3
25 AMP
ABS
900
X_SVO_DR
X AXIS MOTOR
1.14 HP (VM1/VMX1/VM1G); 1.74HP (VM2/VMX2/VM3)
2000 RPM
X_REGEN_RES
100W
Y_SVO_DR
Y AXIS MOTOR
1.14 HP (VM1/VMX1/VM1G); 1.74HP (VM2/VMX2/VM3)
2000 RPM
Y_REGEN_RES
100W
Z_SVO_DR
Z AXIS MOTOR
1.14 HP (VM1/VMX1 EDITION 1)
2.68 HP (VM1/VMX1 EDITION 2, VM2/VMX2, VM3/VMX3, VM1G)
2000 RPM
Z_REGEN_RES
100W (VM1/VMX1 EDITION 1)
500W (VM1/VMX1 EDITION 2, VM2/VMX2, VM3/VMX3, VM1G)
FU4-6
10 AMP (VM1/2/3)
20 AMP (VM1G)
ATC_CW
1114
ATC_CCW
1117
ATC_OL
1.4-2.0A
ATC MAGAZINE MOTOR
1/4 HP
230 VAC 3PH
1.0 FLA (60 Hz)
BRAKE SWITCH
L1/3.01
L3/3.01
OPTIONS
FLOOD COOLANT RECEPTACLE
FLOOD_COOLANT_CTR
FLOOD_COOLANT_OL
FLOOD_COOLANT_MTR
FLOOD COOLANT
1 HP
230VAC
0.76 FLA
0.9-1.25A
CHIP CONVEYOR RECEPTACLE
CHIP_CV_REV_CTR
CHIP_CV_RV_OL
CHIP_CV_MTR
CHIP CONVEYOR
0.25 HP
230VAC
0.70 FLA
COMPRESSOR_CTR
COMPRESSOR_OL
COMPRESSOR
CHILLER
1.6 HP
230VAC
4.00 FLA
5-7A
PUMP_CTR
PUMP_OL
PUMP
CHILLER
0.6 HP
230VAC
1.40 FLA
1.6-2.5A
VM1G OPTION
DUST_COLL_DISC
DUST_COLLECTOR
DUST_COLL_OL
DUST COLLECTOR
BLOWER
5 HP
230VAC
12.0 FLA
12-16A
NOTE: SET OVERLOADS TO 130% OF MOTOR FLA
SURFACE TREATMENT
HEAT TREATMENT
FIRST USED ON VM1
EXCEPT AS NOTED: ALL CORNERS MUST BE AS FOLLOWS
EXCEPT AS NOTED: ALL DIMENSIONS IN INCHES TOLERANCE
EXCEPT AS NOTED: WELDING TOLERANCE MUST BE AS FOLLOWS ±.12
THIRD ANGLE PROJECTION
HURCO MANUFACTURING COMPANY, INC. INDIANAPOLIS, IN U.S.A.
DESCRIPTION SCHEMATICS, VM1, VM2, VM3, VM1G
DRAWN SJT DATE 8/12/02 CHECKED DEO DATE 8/13/02 APPROVED DEO DATE 8/13/02
SCALE NONE
UNIT OF MEAS. EA
SIZE D
DRAWING 003-2022-011
SHT. 2 OF 16
REV. K

SIZE D | DRAWING 003-2022-011 | SHT 3 OF 16 | REV. K
PROPRIETARY INFORMATION
INFORMATION CONTAINED HEREIN IS THE PROPERTY OF HURCO MANUFACTURING COMPANY, INC. NO REPRODUCTION OR DISCLOSURE OF THIS INFORMATION SHALL BE MADE BY THE RECIPIENT TO ANY OTHER PERSON OR ORGANIZATION WITHOUT THE PRIOR WRITTEN CONSENT OF HURCO MANUFACTURING COMPANY, INC.

# POWER DISTRIBUTION 2

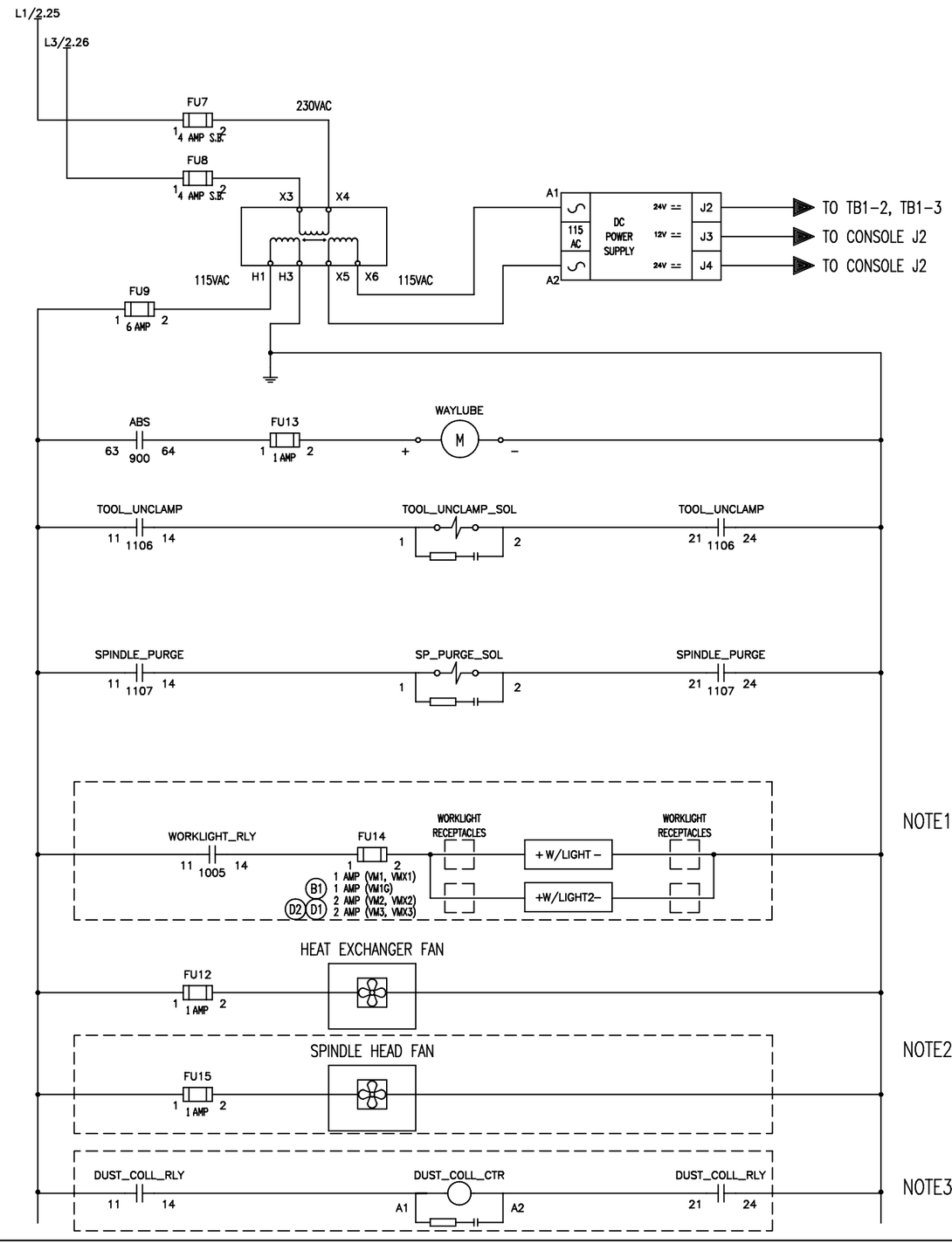


NOTE1: VM1 = ONE WORKLIGHT (OPT)
VMX1 = ONE WORKLIGHT (STD)
VM2 = TWO WORKLIGHTS (OPT)
VMX2 = TWO WORKLIGHTS (STD)
VM3 = TWO WORKLIGHTS (OPT) (D1)
VMX3 = TWO WORKLIGHTS (STD)
VM1G = ONE WORKLIGHT (STD) (D2)

NOTE2: SPINDLE HEAD FAN VM1/2/3 ONLY

NOTE3: DUST COLLECTOR VM1G OPTION ONLY

SURFACE TREATMENT ~ | HEAT TREATMENT ~ | FIRST USED ON VM1
EXCEPT AS NOTED: ALL CORNERS MUST BE AS FOLLOWS INSIDE: .050" X 45° OR .05" R MAX OUTSIDE: .030" X 45° OR .05" R
EXCEPT AS NOTED: WELDING TOLERANCE MUST BE AS FOLLOWS ±.12
EXCEPT AS NOTED: ALL DIMENSIONS IN INCHES TOLERANCE DECIMAL .0 ±.0300 .00 ±.0150 .000 ±.0050 .0000 ±.0005 ANGULAR ± 0°30'
THIRD ANGLE PROJECTION

HURCO MANUFACTURING COMPANY, INC. INDIANAPOLIS, IN U.S.A.

| DESCRIPTION | | | | | | |
|---|---|---|---|---|---|---|
| SCHEMATICS, VM1, VM2, VM3, VM1G | | | | | | |
| DRAWN | DATE | CHECKED | DATE | APPROVED | DATE | |
| SJT | 8/12/02 | DEO | 8/13/02 | DEO | 8/13/02 | |
| SCALE NONE | SIZE D | DRAWING 003-2022-011 | | | SHT 3 OF 16 | REV. K |
| UNIT OF MEAS. EA | | | | | | |

SIZE D | DRAWING 003-2022-011 | SHT. 4 OF 16 | REV. K

PROPRIETARY INFORMATION
INFORMATION CONTAINED HEREIN IS THE PROPERTY OF HURCO MANUFACTURING COMPANY, INC. NO REPRODUCTION OR DISCLOSURE OF THIS INFORMATION SHALL BE MADE BY THE RECIPIENT TO ANY OTHER PERSON OR ORGANIZATION WITHOUT THE PRIOR WRITTEN CONSENT OF HURCO MANUFACTURING COMPANY, INC.

# X-AXIS SUBSYSTEM

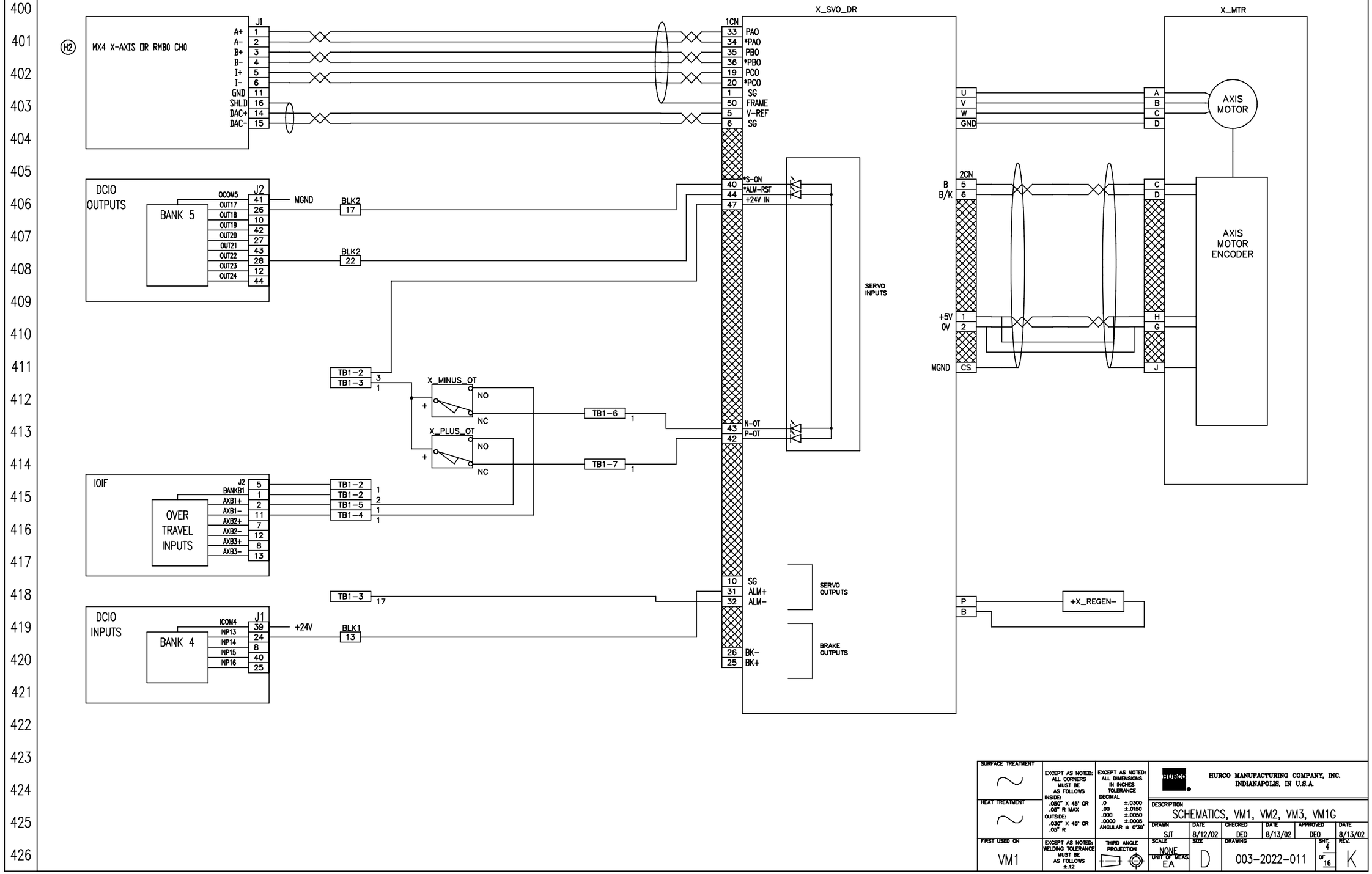


| | | | | | | |
|---|---|---|---|---|---|---|
| SURFACE TREATMENT ~ | EXCEPT AS NOTED: ALL CORNERS MUST BE AS FOLLOWS INSIDE: .050" X 45° OR .05" R MAX OUTSIDE: .030" X 45° OR .05" R | EXCEPT AS NOTED: ALL DIMENSIONS IN INCHES TOLERANCE DECIMAL .0 ±.0300, .00 ±.0150, .000 ±.0050, .0000 ±.0005 ANGULAR ± 0°30' | HURCO MANUFACTURING COMPANY, INC. INDIANAPOLIS, IN U.S.A. | | | |
| HEAT TREATMENT ~ | | | DESCRIPTION: SCHEMATICS, VM1, VM2, VM3, VM1G | | | |
| FIRST USED ON: VM1 | EXCEPT AS NOTED: WELDING TOLERANCE MUST BE AS FOLLOWS ±.12 | THIRD ANGLE PROJECTION | DRAWN: SJT | DATE: 8/12/02 | CHECKED: DEO | DATE: 8/13/02 |
| | | | APPROVED: DEO | DATE: 8/13/02 | SCALE: NONE | SIZE: D |
| | | | DRAWING: 003-2022-011 | SHT. 4 OF 16 | REV. K | UNIT OF MEAS: EA |

SIZE D | DRAWING 003-2022-011 | SHT 5 OF 16 | REV. K

PROPRIETARY INFORMATION
INFORMATION CONTAINED HEREIN IS THE PROPERTY OF HURCO MANUFACTURING COMPANY, INC. NO REPRODUCTION OR DISCLOSURE OF THIS INFORMATION SHALL BE MADE BY THE RECIPIENT TO ANY OTHER PERSON OR ORGANIZATION WITHOUT THE PRIOR WRITTEN CONSENT OF HURCO MANUFACTURING COMPANY, INC.

# Y-AXIS SUBSYSTEM

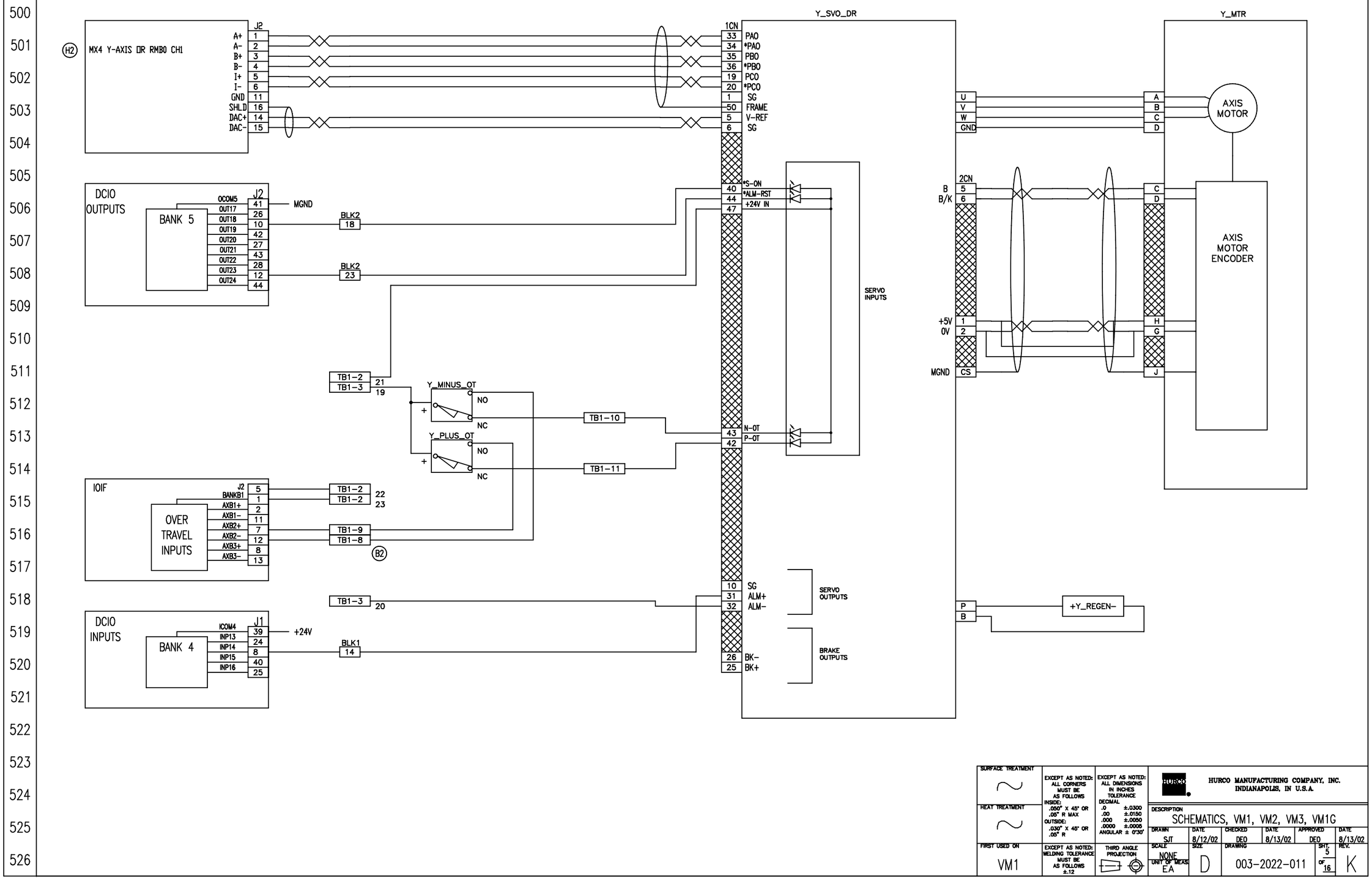


| | | | | | | | | |
|---|---|---|---|---|---|---|---|---|
| SURFACE TREATMENT | EXCEPT AS NOTED: ALL CORNERS MUST BE AS FOLLOWS INSIDE: .050" X 45° OR .05" R MAX OUTSIDE: .030" X 45° OR .05" R | EXCEPT AS NOTED: ALL DIMENSIONS IN INCHES TOLERANCE DECIMAL .0 ±.0300 .00 ±.0150 .000 ±.0050 .0000 ±.0005 ANGULAR ± 0°30' | HURCO MANUFACTURING COMPANY, INC. INDIANAPOLIS, IN U.S.A. | | | | | |
| HEAT TREATMENT | | | DESCRIPTION: SCHEMATICS, VM1, VM2, VM3, VM1G | | | | | |
| | | | DRAWN SJT | DATE 8/12/02 | CHECKED DEO | DATE 8/13/02 | APPROVED DEO | DATE 8/13/02 |
| FIRST USED ON VM1 | EXCEPT AS NOTED: WELDING TOLERANCE MUST BE AS FOLLOWS ±.12 | THIRD ANGLE PROJECTION | SCALE NONE | SIZE D | DRAWING 003-2022-011 | SHT 5 OF 16 | REV. K | |
| | | | UNIT OF MEAS. EA | | | | | |

PROPRIETARY INFORMATION
INFORMATION CONTAINED HEREIN IS THE PROPERTY OF HURCO MANUFACTURING COMPANY, INC. NO REPRODUCTION OR DISCLOSURE OF THIS INFORMATION SHALL BE MADE BY THE RECIPIENT TO ANY OTHER PERSON OR ORGANIZATION WITHOUT THE PRIOR WRITTEN CONSENT OF HURCO MANUFACTURING COMPANY, INC.

SIZE D | DRAWING 003-2022-011 | SHT 6 OF 16 | REV. K

# Z-AXIS SUBSYSTEM (VM1 EDITION 1)

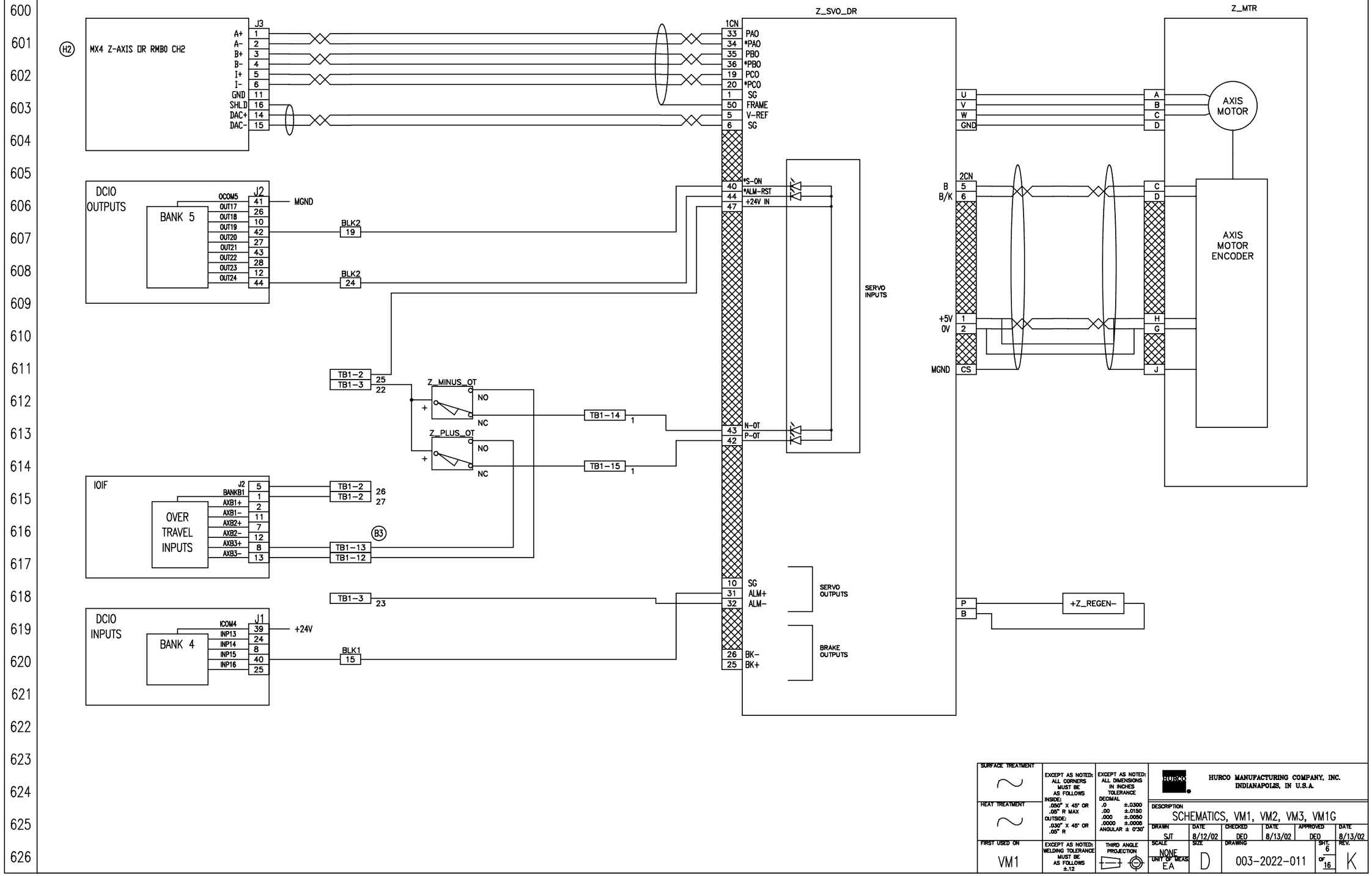


| | | | | | | | |
|---|---|---|---|---|---|---|---|
| SURFACE TREATMENT ~ | EXCEPT AS NOTED: ALL CORNERS MUST BE AS FOLLOWS INSIDE: .050" X 45° OR .05" R MAX OUTSIDE: .030" X 45° OR .05" R | EXCEPT AS NOTED: ALL DIMENSIONS IN INCHES TOLERANCE DECIMAL .0 ±.0300 .00 ±.0150 .000 ±.0050 .0000 ±.0005 ANGULAR ± 0°30' | HURCO MANUFACTURING COMPANY, INC. INDIANAPOLIS, IN U.S.A. | | | | |
| HEAT TREATMENT ~ | | | DESCRIPTION: SCHEMATICS, VM1, VM2, VM3, VM1G | | | | |
| | | | DRAWN SJT | DATE 8/12/02 | CHECKED DEO | DATE 8/13/02 | APPROVED DEO / DATE 8/13/02 |
| FIRST USED ON VM1 | EXCEPT AS NOTED: WELDING TOLERANCE MUST BE AS FOLLOWS ±.12 | THIRD ANGLE PROJECTION | SCALE NONE | SIZE D | DRAWING 003-2022-011 | SHT 6 OF 16 | REV. K |
| | | | UNIT OF MEAS. EA | | | | |

PROPRIETARY INFORMATION
INFORMATION CONTAINED HEREIN IS THE PROPERTY OF HURCO MANUFACTURING COMPANY, INC. NO REPRODUCTION OR DISCLOSURE OF THIS INFORMATION SHALL BE MADE BY THE RECIPIENT TO ANY OTHER PERSON OR ORGANIZATION WITHOUT THE PRIOR WRITTEN CONSENT OF HURCO MANUFACTURING COMPANY, INC.

SIZE D | DRAWING 003-2022-011 | SHT 7 OF 16 | REV. K

SPINDLE SUBSYSTEM (MC5 INVERTER)

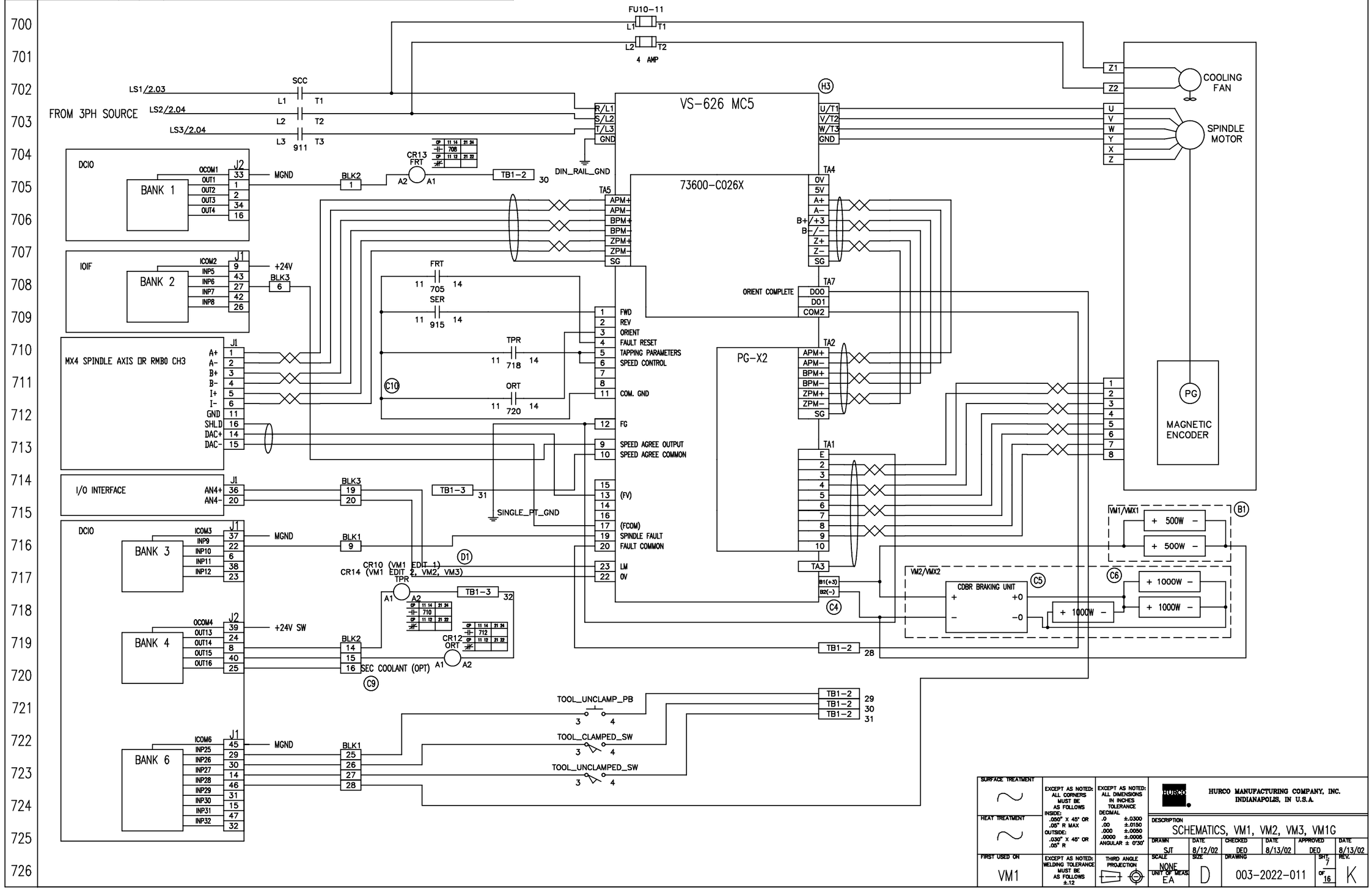


| | | | | | | |
|---|---|---|---|---|---|---|
| SURFACE TREATMENT | EXCEPT AS NOTED: ALL CORNERS MUST BE AS FOLLOWS INSIDE: .050" X 45° OR .05" R MAX OUTSIDE: .030" X 45° OR .05" R | EXCEPT AS NOTED: ALL DIMENSIONS IN INCHES TOLERANCE DECIMAL .0 ±.0300 .00 ±.0150 .000 ±.0050 .0000 ±.0005 ANGULAR ± 0°30' | HURCO MANUFACTURING COMPANY, INC. INDIANAPOLIS, IN U.S.A. | | | |
| HEAT TREATMENT | | | DESCRIPTION: SCHEMATICS, VM1, VM2, VM3, VM1G | | | |
| FIRST USED ON: VM1 | EXCEPT AS NOTED: WELDING TOLERANCE MUST BE AS FOLLOWS ±.12 | THIRD ANGLE PROJECTION | SCALE: NONE | SIZE: D | DRAWING: 003-2022-011 | SHT 7 OF 16 REV. K |

| DRAWN | DATE | CHECKED | DATE | APPROVED | DATE |
|---|---|---|---|---|---|
| SJT | 8/12/02 | DEO | 8/13/02 | DEO | 8/13/02 |

UNIT OF MEAS: EA

SIZE D | DRAWING 003-2022-011 | SHT 8 OF 16 | REV. K

PROPRIETARY INFORMATION
INFORMATION CONTAINED HEREIN IS THE PROPERTY OF HURCO MANUFACTURING COMPANY, INC. NO REPRODUCTION OR DISCLOSURE OF THIS INFORMATION SHALL BE MADE BY THE RECIPIENT TO ANY OTHER PERSON OR ORGANIZATION WITHOUT THE PRIOR WRITTEN CONSENT OF HURCO MANUFACTURING COMPANY, INC.

SPINDLE SUBSYSTEM (10K OPTION, MC5)

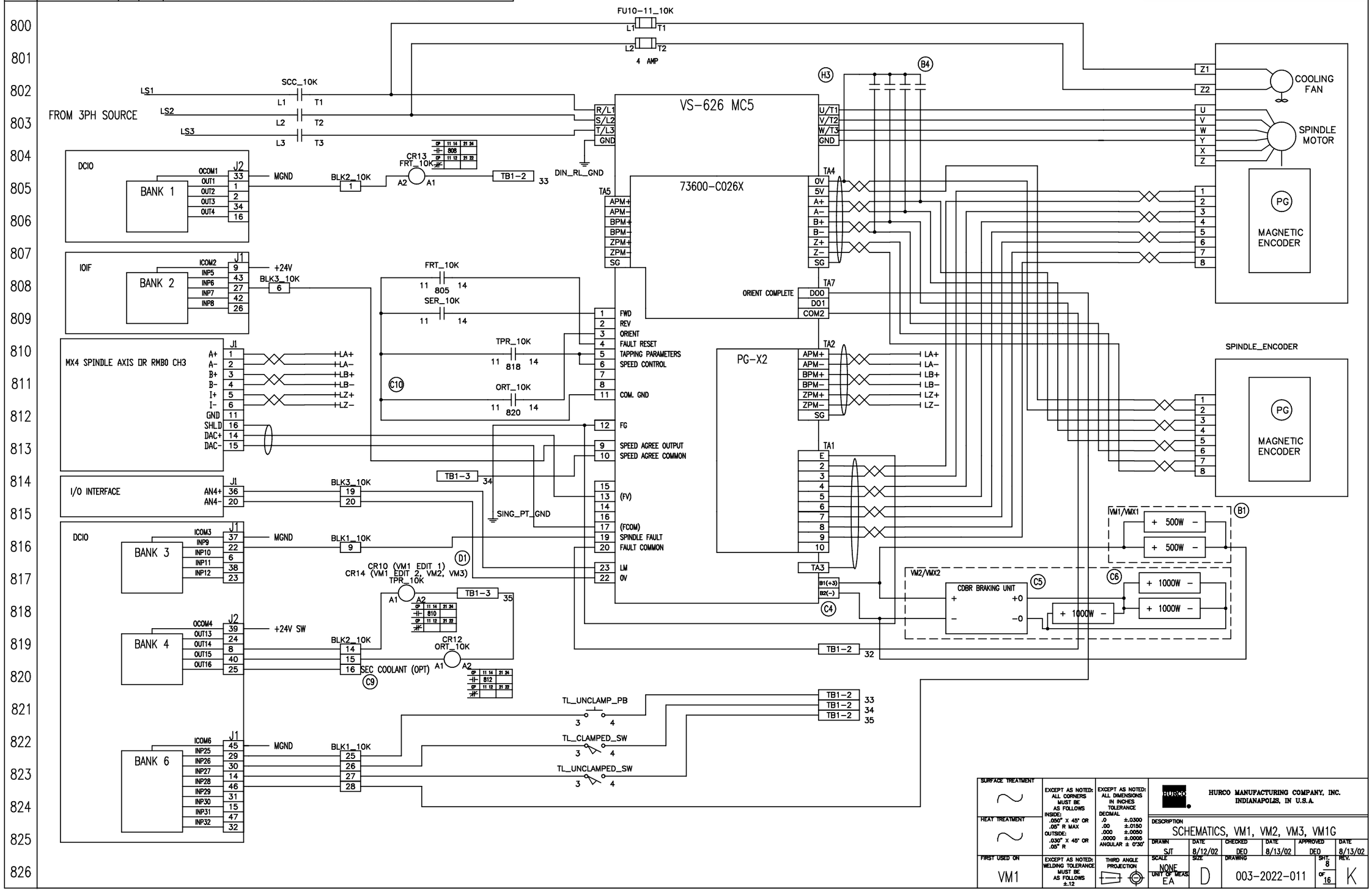


| | |
|---|---|
| SURFACE TREATMENT | EXCEPT AS NOTED: ALL CORNERS MUST BE AS FOLLOWS INSIDE: .050" X 45° OR .05" R MAX OUTSIDE: .030" X 45° OR .05" R |
| HEAT TREATMENT | EXCEPT AS NOTED: ALL DIMENSIONS IN INCHES TOLERANCE DECIMAL .0 ±.0300 .00 ±.0150 .000 ±.0050 .0000 ±.0005 ANGULAR ± 0°30' |
| FIRST USED ON: VM1 | EXCEPT AS NOTED: WELDING TOLERANCE MUST BE AS FOLLOWS ±.12 |
| | THIRD ANGLE PROJECTION |

HURCO MANUFACTURING COMPANY, INC. INDIANAPOLIS, IN U.S.A.

DESCRIPTION: SCHEMATICS, VM1, VM2, VM3, VM1G

| DRAWN | DATE | CHECKED | DATE | APPROVED | DATE |
|---|---|---|---|---|---|
| SJT | 8/12/02 | DEO | 8/13/02 | DEO | 8/13/02 |

SCALE NONE | UNIT OF MEAS. EA | SIZE D | DRAWING 003-2022-011 | SHT. 8 OF 16 | REV. K

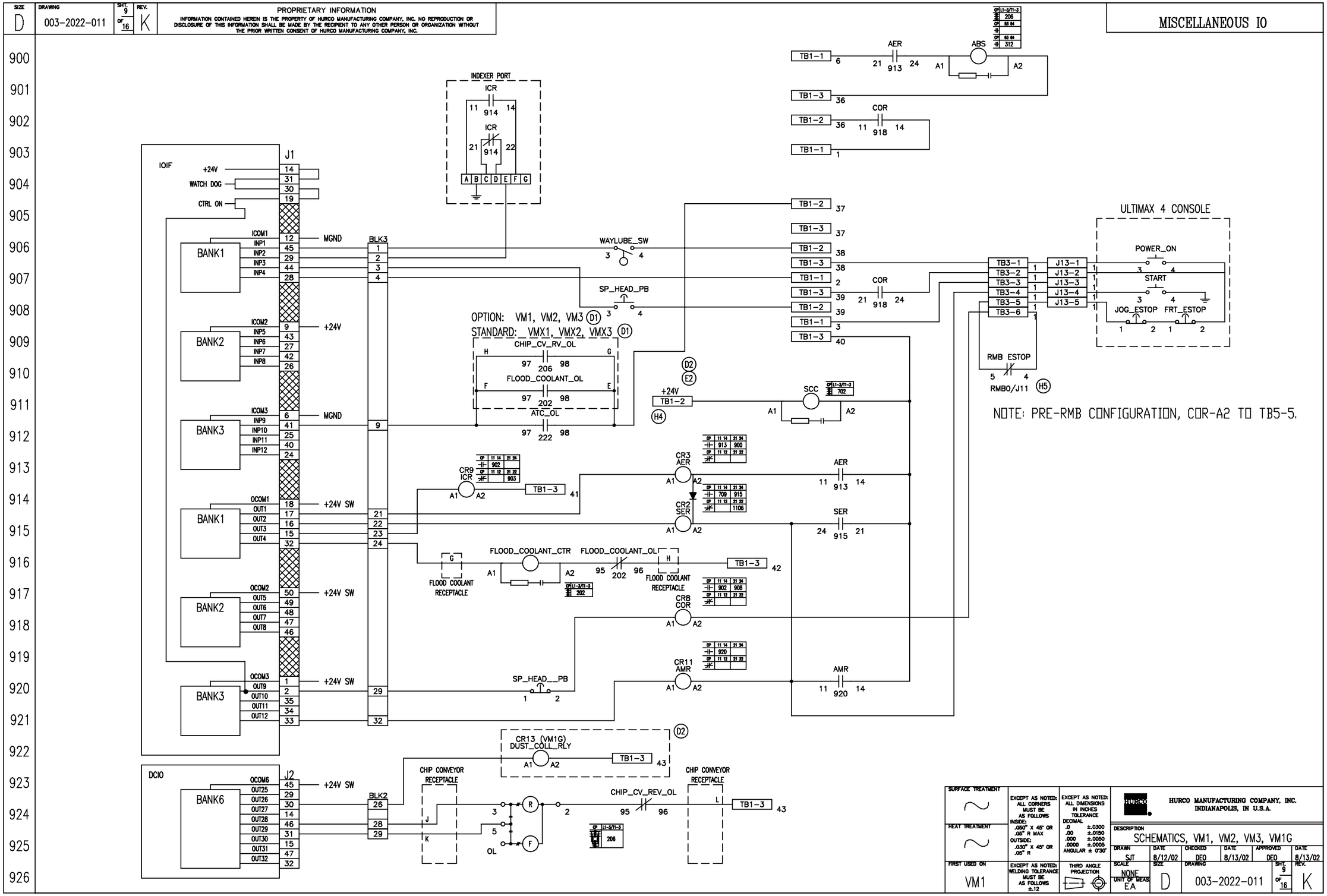
SIZE D
DRAWING 003-2022-011
SHT. 9 OF 16
REV. K
PROPRIETARY INFORMATION
INFORMATION CONTAINED HEREIN IS THE PROPERTY OF HURCO MANUFACTURING COMPANY, INC. NO REPRODUCTION OR DISCLOSURE OF THIS INFORMATION SHALL BE MADE BY THE RECIPIENT TO ANY OTHER PERSON OR ORGANIZATION WITHOUT THE PRIOR WRITTEN CONSENT OF HURCO MANUFACTURING COMPANY, INC.
MISCELLANEOUS IO
INDEXER PORT
ICR
IOIF
J1
+24V
WATCH DOG
CTRL ON
BANK1
BANK2
BANK3
MGND
+24V SW
BLK3
WAYLUBE_SW
SP_HEAD_PB
OPTION: VM1, VM2, VM3
STANDARD: VMX1, VMX2, VMX3
CHIP_CV_RV_OL
FLOOD_COOLANT_OL
ATC_OL
CR9 ICR
CR3 AER
CR2 SER
FLOOD_COOLANT_CTR
FLOOD COOLANT RECEPTACLE
CR8 COR
CR11 AMR
SP_HEAD__PB
CR13 (VM1G) DUST_COLL_RLY
DCIO
J2
BANK6
BLK2
CHIP CONVEYOR RECEPTACLE
CHIP_CV_REV_OL
AER
ABS
COR
SCC
ULTIMAX 4 CONSOLE
POWER_ON
START
JOG_ESTOP
FRT_ESTOP
RMB ESTOP
RMB0/J11
NOTE: PRE-RMB CONFIGURATION, COR-A2 TO TB5-5.
HURCO MANUFACTURING COMPANY, INC. INDIANAPOLIS, IN U.S.A.
SCHEMATICS, VM1, VM2, VM3, VM1G
SJT 8/12/02 DEO 8/13/02 DEO 8/13/02
NONE
EA
D
003-2022-011
K
VM1

SIZE D | DRAWING 003-2022-011 | SHT 10 OF 16 | REV. K

PROPRIETARY INFORMATION
INFORMATION CONTAINED HEREIN IS THE PROPERTY OF HURCO MANUFACTURING COMPANY, INC. NO REPRODUCTION OR DISCLOSURE OF THIS INFORMATION SHALL BE MADE BY THE RECIPIENT TO ANY OTHER PERSON OR ORGANIZATION WITHOUT THE PRIOR WRITTEN CONSENT OF HURCO MANUFACTURING COMPANY, INC.

MISCELLANEOUS IO 2

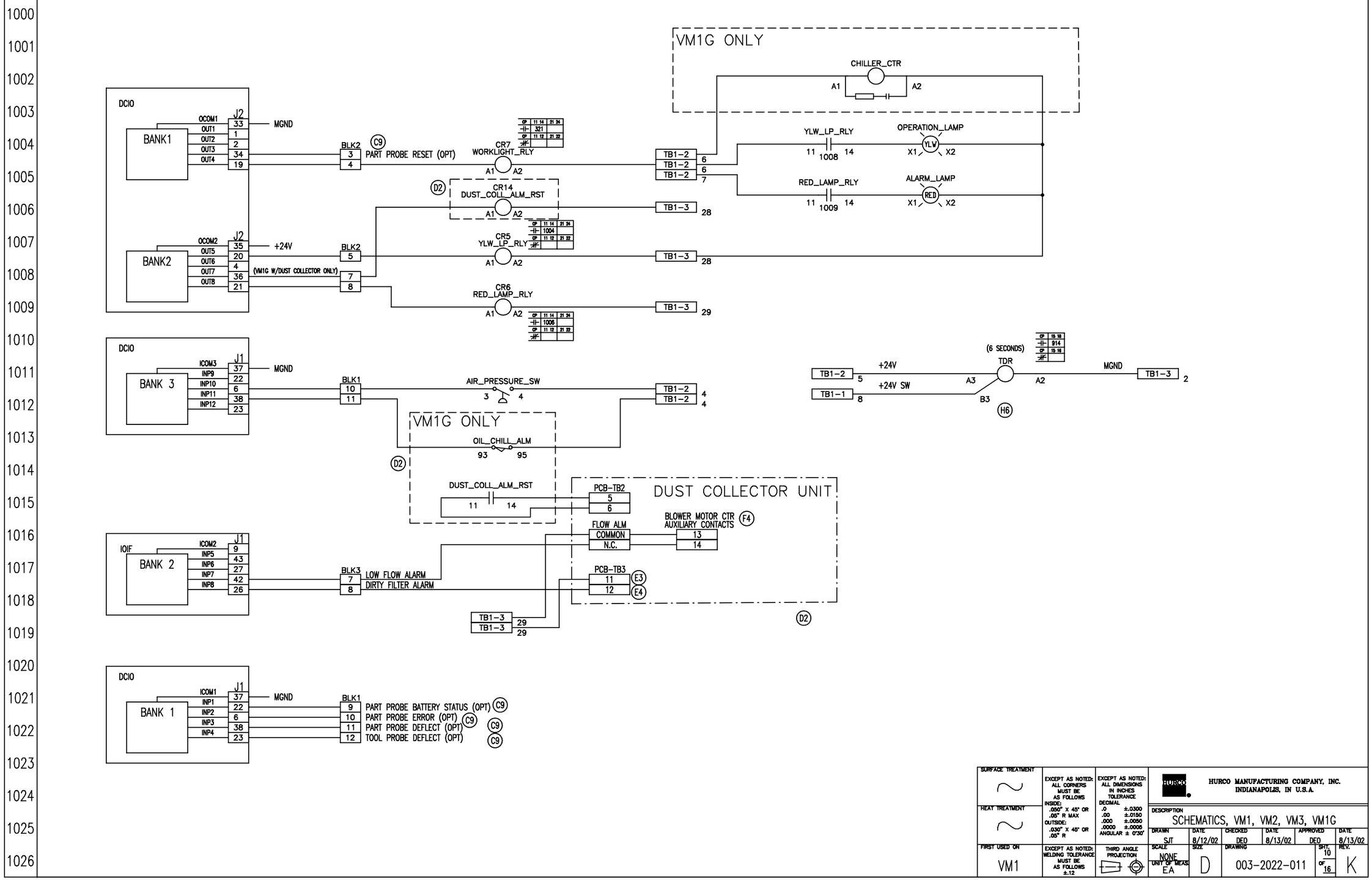


| | | | |
|---|---|---|---|
| SURFACE TREATMENT ~ | EXCEPT AS NOTED: ALL CORNERS MUST BE AS FOLLOWS INSIDE: .050" X 45° OR .05" R MAX OUTSIDE: .030" X 45° OR .05" R | EXCEPT AS NOTED: ALL DIMENSIONS IN INCHES TOLERANCE DECIMAL .0 ±.0300, .00 ±.0150, .000 ±.0050, .0000 ±.0006 ANGULAR ± 0°30' | HURCO MANUFACTURING COMPANY, INC. INDIANAPOLIS, IN U.S.A. |
| HEAT TREATMENT ~ | | | DESCRIPTION: SCHEMATICS, VM1, VM2, VM3, VM1G |
| FIRST USED ON: VM1 | EXCEPT AS NOTED: WELDING TOLERANCE MUST BE AS FOLLOWS ±.12 | THIRD ANGLE PROJECTION | DRAWN SJT 8/12/02 · CHECKED DEO 8/13/02 · APPROVED DEO 8/13/02 · SCALE NONE · SIZE D · DRAWING 003-2022-011 · SHT 10 OF 16 · REV. K · UNIT OF MEAS. EA |

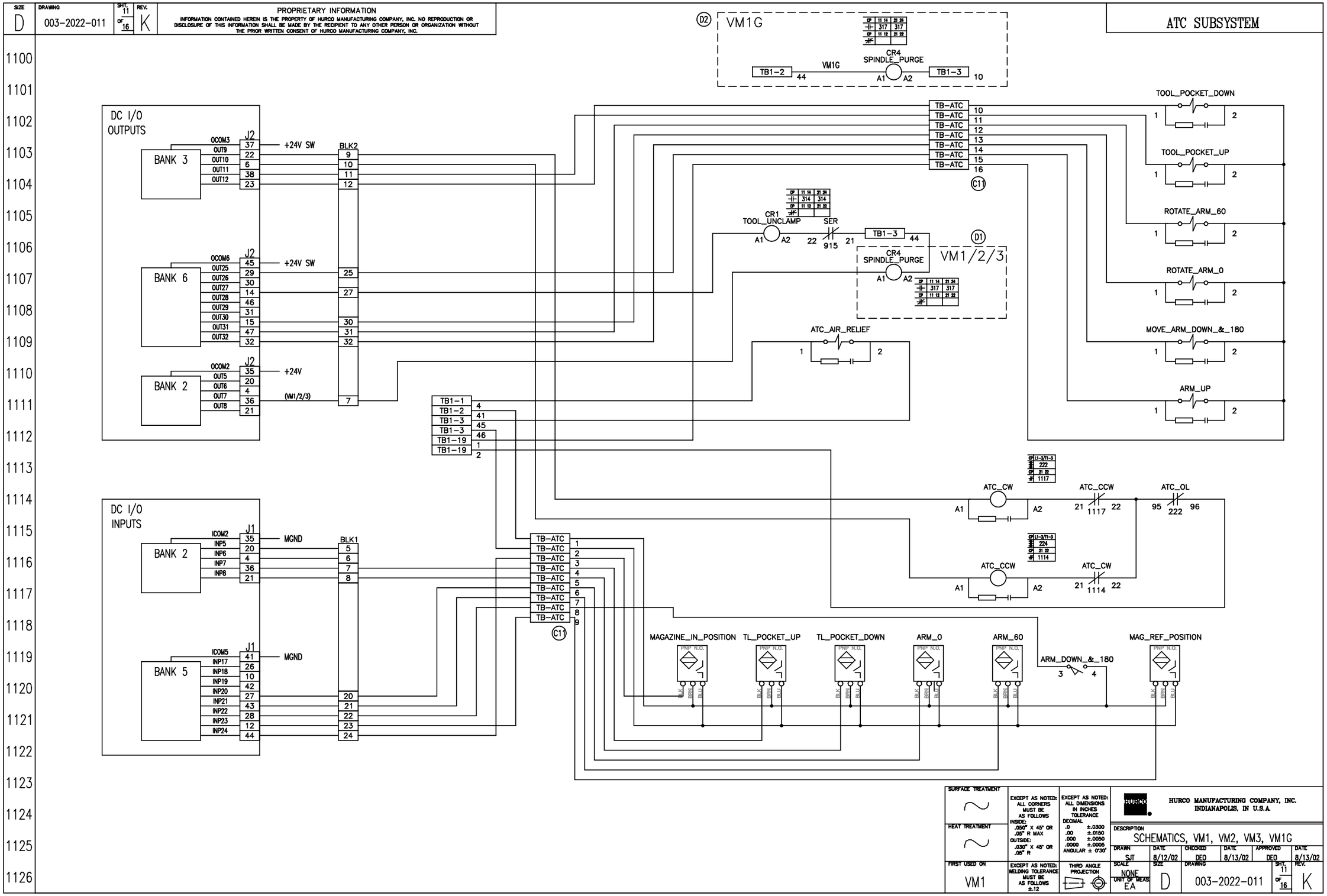
SIZE D
DRAWING 003-2022-011
SHT. 11 OF 16
REV. K
PROPRIETARY INFORMATION
INFORMATION CONTAINED HEREIN IS THE PROPERTY OF HURCO MANUFACTURING COMPANY, INC. NO REPRODUCTION OR DISCLOSURE OF THIS INFORMATION SHALL BE MADE BY THE RECIPIENT TO ANY OTHER PERSON OR ORGANIZATION WITHOUT THE PRIOR WRITTEN CONSENT OF HURCO MANUFACTURING COMPANY, INC.
ATC SUBSYSTEM
VM1G
CR4 SPINDLE_PURGE
TB1-2
TB1-3
DC I/O OUTPUTS
BANK 3
BANK 6
BANK 2
+24V SW
+24V
(VM1/2/3)
BLK2
TB-ATC
TOOL_POCKET_DOWN
TOOL_POCKET_UP
ROTATE_ARM_60
ROTATE_ARM_0
MOVE_ARM_DOWN_&_180
ARM_UP
CR1 TOOL_UNCLAMP
SER
VM1/2/3
ATC_AIR_RELIEF
ATC_CW
ATC_CCW
ATC_OL
DC I/O INPUTS
BANK 2
BANK 5
MGND
BLK1
MAGAZINE_IN_POSITION
TL_POCKET_UP
TL_POCKET_DOWN
ARM_0
ARM_60
ARM_DOWN_&_180
MAG_REF_POSITION
SURFACE TREATMENT
HEAT TREATMENT
FIRST USED ON
VM1
EXCEPT AS NOTED: ALL CORNERS MUST BE AS FOLLOWS
EXCEPT AS NOTED: ALL DIMENSIONS IN INCHES TOLERANCE
EXCEPT AS NOTED: WELDING TOLERANCE MUST BE AS FOLLOWS ±.12
THIRD ANGLE PROJECTION
HURCO MANUFACTURING COMPANY, INC. INDIANAPOLIS, IN U.S.A.
DESCRIPTION
SCHEMATICS, VM1, VM2, VM3, VM1G
DRAWN SJT
DATE 8/12/02
CHECKED DEO
DATE 8/13/02
APPROVED DEO
DATE 8/13/02
SCALE NONE
UNIT OF MEAS. EA
SIZE D
DRAWING 003-2022-011
SHT. 11 OF 16
REV. K

SIZE D | DRAWING 003-2022-011 | SHT 12 OF 16 | REV. K
PROPRIETARY INFORMATION
INFORMATION CONTAINED HEREIN IS THE PROPERTY OF HURCO MANUFACTURING COMPANY, INC. NO REPRODUCTION OR DISCLOSURE OF THIS INFORMATION SHALL BE MADE BY THE RECIPIENT TO ANY OTHER PERSON OR ORGANIZATION WITHOUT THE PRIOR WRITTEN CONSENT OF HURCO MANUFACTURING COMPANY, INC.

CE MACHINES, SAFETY

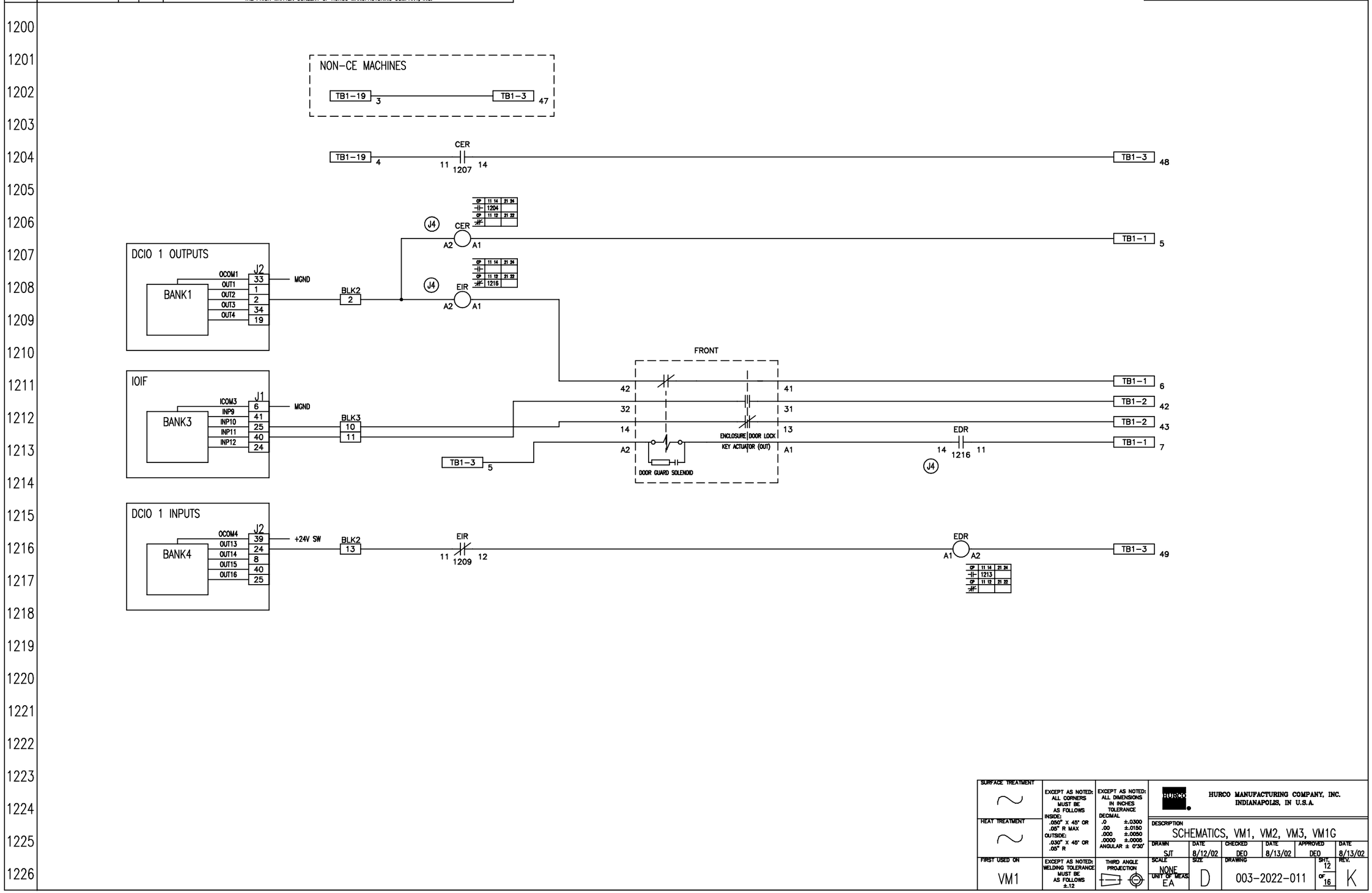


| | | | | | | |
|---|---|---|---|---|---|---|
| SURFACE TREATMENT | EXCEPT AS NOTED: ALL CORNERS MUST BE AS FOLLOWS INSIDE: .050" X 45° OR .05" R MAX OUTSIDE: .030" X 45° OR .05" R | EXCEPT AS NOTED: ALL DIMENSIONS IN INCHES TOLERANCE DECIMAL .0 ±.0300 .00 ±.0150 .000 ±.0050 .0000 ±.0005 ANGULAR ± 0°30' | HURCO MANUFACTURING COMPANY, INC. INDIANAPOLIS, IN U.S.A. | | | |
| HEAT TREATMENT | | | DESCRIPTION: SCHEMATICS, VM1, VM2, VM3, VM1G | | | |
| FIRST USED ON: VM1 | EXCEPT AS NOTED: WELDING TOLERANCE MUST BE AS FOLLOWS ±.12 | THIRD ANGLE PROJECTION | DRAWN: SJT | DATE: 8/12/02 | CHECKED: DEO | DATE: 8/13/02 |
| | | | APPROVED: DEO | DATE: 8/13/02 | SCALE: NONE | SIZE: D |
| | | | DRAWING: 003-2022-011 | SHT: 12 OF 16 | REV: K | UNIT OF MEAS: EA |

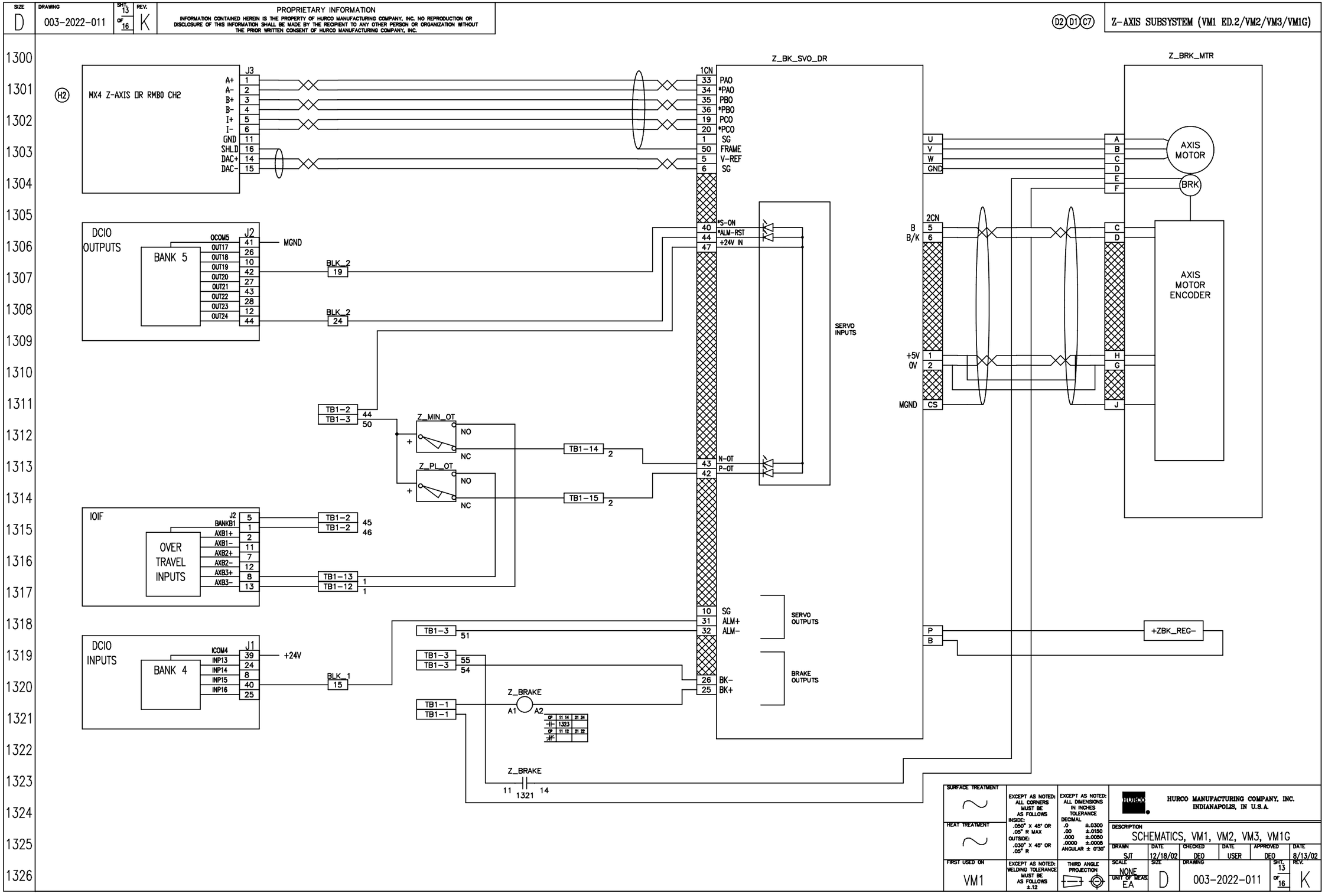
SIZE D
DRAWING 003-2022-011
SHT 13 OF 16
REV. K
PROPRIETARY INFORMATION
INFORMATION CONTAINED HEREIN IS THE PROPERTY OF HURCO MANUFACTURING COMPANY, INC. NO REPRODUCTION OR DISCLOSURE OF THIS INFORMATION SHALL BE MADE BY THE RECIPIENT TO ANY OTHER PERSON OR ORGANIZATION WITHOUT THE PRIOR WRITTEN CONSENT OF HURCO MANUFACTURING COMPANY, INC.
D2 D1 C7
Z-AXIS SUBSYSTEM (VM1 ED.2/VM2/VM3/VM1G)
Z_BK_SVO_DR
Z_BRK_MTR
H2
MX4 Z-AXIS DR RMB0 CH2
J3
A+ 1
A- 2
B+ 3
B- 4
I+ 5
I- 6
GND 11
SHLD 16
DAC+ 14
DAC- 15
1CN
33 PA0
34 *PA0
35 PB0
36 *PB0
19 PC0
20 *PC0
1 SG
50 FRAME
5 V-REF
6 SG
40 *S-ON
44 *ALM-RST
47 +24V IN
SERVO INPUTS
DCIO OUTPUTS
BANK 5
J2
OCOM5
OUT17 41
OUT18 26
OUT19 10
OUT20 42
OUT21 27
OUT22 43
OUT23 28
OUT24 12
44
MGND
BLK_2 19
BLK_2 24
TB1-2 44
TB1-3 50
Z_MIN_OT
NO
NC
Z_PL_OT
NO
NC
TB1-14 2
TB1-15 2
43 N-OT
42 P-OT
IOIF
OVER TRAVEL INPUTS
J2
BANKB1 5
AXB1+ 1
AXB1- 2
AXB2+ 11
AXB2- 7
AXB3+ 12
AXB3- 8
13
TB1-2 45
TB1-2 46
TB1-13 1
TB1-12 1
10 SG
31 ALM+
32 ALM-
SERVO OUTPUTS
TB1-3 51
TB1-3 55
TB1-3 54
BRAKE OUTPUTS
26 BK-
25 BK+
DCIO INPUTS
BANK 4
J1
ICOM4
INP13 39
INP14 24
INP15 8
INP16 40
25
+24V
BLK_1 15
TB1-1
TB1-1
Z_BRAKE
A1 A2
Z_BRAKE
11 1321 14
U
V
W
GND
A
B
C
D
E
F
AXIS MOTOR
BRK
AXIS MOTOR ENCODER
2CN
B 5
B/K 6
C
D
+5V 1
0V 2
H
G
MGND CS
J
P
B
+ZBK_REG-
SURFACE TREATMENT
HEAT TREATMENT
FIRST USED ON VM1
EXCEPT AS NOTED: ALL CORNERS MUST BE AS FOLLOWS
INSIDE: .050" X 45° OR .05" R MAX
OUTSIDE: .030" X 45° OR .05" R
EXCEPT AS NOTED: WELDING TOLERANCE MUST BE AS FOLLOWS ±.12
EXCEPT AS NOTED: ALL DIMENSIONS IN INCHES TOLERANCE
DECIMAL
.0 ±.0300
.00 ±.0150
.000 ±.0050
.0000 ±.0005
ANGULAR ± 0°30'
THIRD ANGLE PROJECTION
HURCO MANUFACTURING COMPANY, INC. INDIANAPOLIS, IN U.S.A.
DESCRIPTION SCHEMATICS, VM1, VM2, VM3, VM1G
DRAWN SJT 12/18/02
CHECKED DEO
DATE USER
APPROVED DEO 8/13/02
SCALE NONE
SIZE D
DRAWING 003-2022-011
SHT 13 OF 16
REV. K
UNIT OF MEAS. EA

SIZE D | DRAWING 003-2022-011 | SHT 14 OF 16 | REV. K

PROPRIETARY INFORMATION
INFORMATION CONTAINED HEREIN IS THE PROPERTY OF HURCO MANUFACTURING COMPANY, INC. NO REPRODUCTION OR DISCLOSURE OF THIS INFORMATION SHALL BE MADE BY THE RECIPIENT TO ANY OTHER PERSON OR ORGANIZATION WITHOUT THE PRIOR WRITTEN CONSENT OF HURCO MANUFACTURING COMPANY, INC.

D2 SPINDLE SUBSYSTEM (VM1G,F7 INVERTER)

OIL_CHILLER_CTR
OIL CHILLER
R
S
T
GND
SINGLE POINT GROUND
SCC
230VAC L1 L2 L3

DC I/O OUTPUTS
BANK 1
OCOM1 OUT1 OUT2 OUT3 OUT4
J2 33 1 2 34 19
BLK2 (J1) 34 MGND 1 SPDL FAULT RESET
TB1 (J2) 3
CR18 FRT (J3) A2 A1
TB1 2
FRT (J3) 11 14 18CR-1

DC I/O OUTPUTS
BANK 4
OCOM4 OUT13 OUT14 OUT15 OUT16
J2 39 24 8 40 25
BLK2 33 +24V SWITCHED
14 TAPPING ACCEL/DECEL
15 SPINDLE ORIENT
TB1 2 +24V 1

MX4
J1
A+ 1
A− 2
B+ 3
B− 4
I+ 5
I− 6
SHLD 16
DAC+ 14
DAC− 15

CR12 ORT A1 A2
TB1 +24V SW 1 +24V SW 1 2 +24V 2 +24V 2 2 MGND 3 MGND 3 (F2)

SER 11 14 2CR-1
ORT 21 22 12CR-2

CE MACHINES
CE INT'LCK RELAY (F3)
21 24 16CR-2
NON-CE MACHINES

TDR 15 1038 18

F7 INVERTER
R/L1 S/L2 T/L3 GND
S1 FWD
S2 REV
S3 UNUSED
S4 FAULT RESET
S5 TAPPING PARMS
S6 SPEED CONTROL
S7 INVERTER ENABLE
S8 EXT BASEBLOCK N.C.
SN COM. GROUND
SC DIGITAL COMMON
SP 24VDC
E FG
A1 0 TO +/− 10V
AC ANALOG COMMON
A2 THERMISTOR INPUT
+V +15VDC, 20mA 18K
AC ANALOG COMMON
AM LOAD METER
AC ANALOG COMMON
M1 ORT CMP OUTPUT
M2 ORT CMP COMMON
M3 SPD AGR OUTPUT
M4 SPD AGR COMMON
MB SPINDLE FAULT
MC SPD FLT COMMON

U/T1 V/T2 W/T3 GND
POWER PL1−1 PL1−4 PL1−3 PL1−PE
30K SPINDLE
SPINDLE MOTOR

B1 + 1200W −
B2 + 1200W −

I/O
PL2−4 +24V DC
PL2−6 DC COM
PL2−11 TOOL CLAMPED (TI)
PL2−8 NO TOOL (NT)
PL2−5 TOOL UNCLAMPED (TO)
PL2−1 PTC TERMISTOR +
PL2−2 PTC THERMISTOR −

I/O INTERFACE
J1
AN4+ 36
AN4− 20
BLK3 19 LOAD METER +
20 LOAD METER −

IOIF INPUTS
BANK2
ICOM2 INP5 INP6 INP7 INP8
J1 9 43 27 42 26
+24V
BLK3 5 6 7 8 12
SPEED AGREED
SPINDLE ZERO SPEED
(F1)
ORT 11 14 12CR-1

DC I/O INPUTS
BANK3
ICOM3 INP9 INP10 INP11 INP12
J1 37 22 6 38 23
MGND
BLK1 9 10 11 12
SPINDLE FAULT
ORIENT COMPLETE
CLAMP NO TOOL

BANK6
ICOM6 INP25 INP26 INP27 INP28 INP29 INP30 INP31 INP32
J1 45 29 30 14 46 31 15 47 32
MGND
BLK1 25 26 27 28 29 30 31 32
TOOL UNCLAMP PB
CLAMPED
UNCLAMPED

TOOL_UNCLAMP_PB 3 4
TB1 +24V 3 MGND 2 +24V 3 MGND

| | | | | | | |
|---|---|---|---|---|---|---|
| SURFACE TREATMENT | EXCEPT AS NOTED: ALL CORNERS MUST BE AS FOLLOWS INSIDE: .050" X 45° OR .05" R MAX OUTSIDE: .030" X 45° OR .05" R | EXCEPT AS NOTED: ALL DIMENSIONS IN INCHES TOLERANCE DECIMAL .0 ±.0300 .00 ±.0150 .000 ±.0050 .0000 ±.0005 ANGULAR ± 0°30' | HURCO MANUFACTURING COMPANY, INC. INDIANAPOLIS, IN U.S.A. | | | |
| HEAT TREATMENT | | | DESCRIPTION: SCHEMATICS, VM1, VM2, VM3, VM1G | | | |
| | | | DRAWN SJT | DATE 12/18/02 | CHECKED DEO | DATE USER | APPROVED DEO | DATE 8/13/02 |
| FIRST USED ON VM1 | EXCEPT AS NOTED: WELDING TOLERANCE MUST BE AS FOLLOWS ±.12 | THIRD ANGLE PROJECTION | SCALE NONE | SIZE D | DRAWING 003-2022-011 | SHT. 14 OF 16 | REV. K |
| | | | UNIT OF MEAS. EA | | | | |

SIZE D | DRAWING 003-2022-011 | SHT 15 OF 16 | REV. K

PROPRIETARY INFORMATION

INFORMATION CONTAINED HEREIN IS THE PROPERTY OF HURCO MANUFACTURING COMPANY, INC. NO REPRODUCTION OR DISCLOSURE OF THIS INFORMATION SHALL BE MADE BY THE RECIPIENT TO ANY OTHER PERSON OR ORGANIZATION WITHOUT THE PRIOR WRITTEN CONSENT OF HURCO MANUFACTURING COMPANY, INC.

H7 SPINDLE SUBSYSTEM (VM1/2/3, F7 INVERTER)

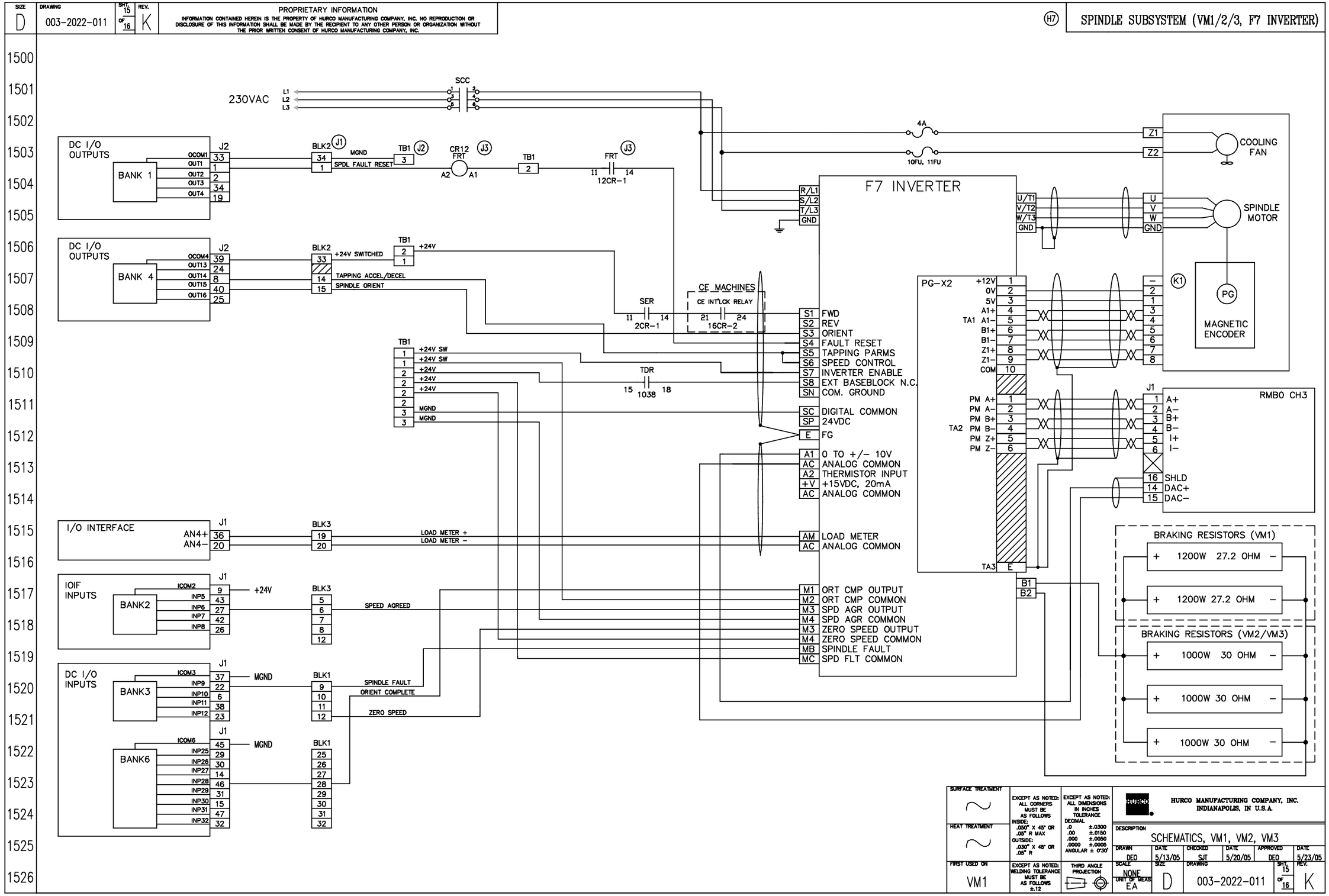


| | | | | | | |
|---|---|---|---|---|---|---|
| SURFACE TREATMENT | EXCEPT AS NOTED: ALL CORNERS MUST BE AS FOLLOWS INSIDE: .050" X 45° OR .05" R MAX OUTSIDE: .030" X 45° OR .05" R | EXCEPT AS NOTED: ALL DIMENSIONS IN INCHES TOLERANCE DECIMAL .0 ±.0300 .00 ±.0150 .000 ±.0050 .0000 ±.0005 ANGULAR ± 0°30' | HURCO MANUFACTURING COMPANY, INC. INDIANAPOLIS, IN U.S.A. | | | |
| HEAT TREATMENT | | | DESCRIPTION: SCHEMATICS, VM1, VM2, VM3 | | | |
| FIRST USED ON: VM1 | EXCEPT AS NOTED: WELDING TOLERANCE MUST BE AS FOLLOWS ±.12 | THIRD ANGLE PROJECTION | DRAWN DEO 5/13/05 | CHECKED SJT 5/20/05 | APPROVED DEO 5/23/05 | |
| | | | SCALE NONE | SIZE D | DRAWING 003-2022-011 | SHT 15 OF 16 REV. K |
| | | | UNIT OF MEAS. EA | | | |

SIZE D | DRAWING 003-2022-011 | SHT 16 OF 16 | REV. K

PROPRIETARY INFORMATION
INFORMATION CONTAINED HEREIN IS THE PROPERTY OF HURCO MANUFACTURING COMPANY, INC. NO REPRODUCTION OR DISCLOSURE OF THIS INFORMATION SHALL BE MADE BY THE RECIPIENT TO ANY OTHER PERSON OR ORGANIZATION WITHOUT THE PRIOR WRITTEN CONSENT OF HURCO MANUFACTURING COMPANY, INC.

H7 SPINDLE SUBSYSTEM (VM1/2/3, 10K OPT. F7 INV.)

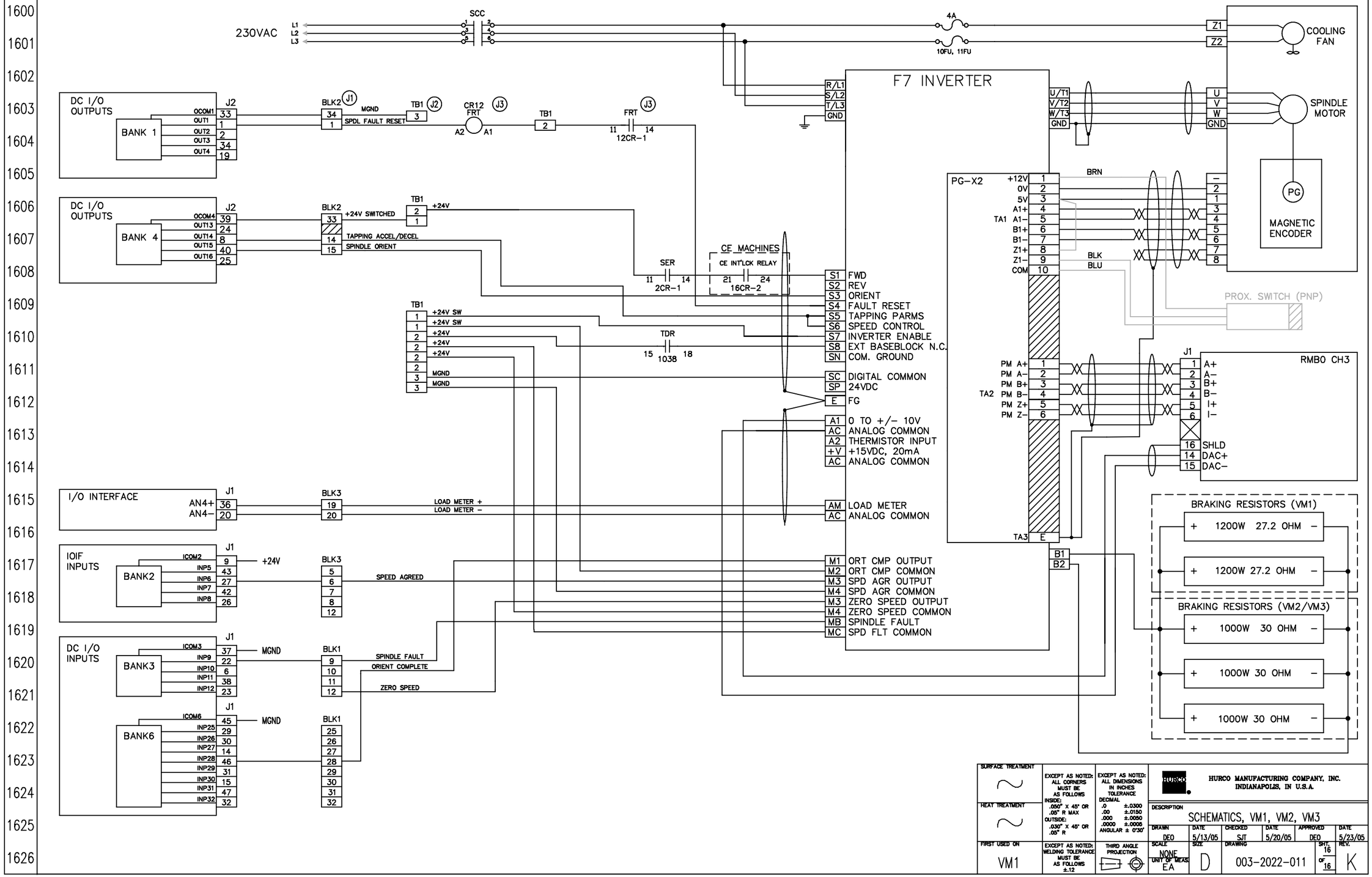


| | | | | | | |
|---|---|---|---|---|---|---|
| SURFACE TREATMENT ~ | EXCEPT AS NOTED: ALL CORNERS MUST BE AS FOLLOWS INSIDE: .050" X 45° OR .05" R MAX OUTSIDE: .030" X 45° OR .05" R | EXCEPT AS NOTED: ALL DIMENSIONS IN INCHES TOLERANCE DECIMAL .0 ±.0300, .00 ±.0150, .000 ±.0050, .0000 ±.0005 ANGULAR ± 0°30' | HURCO MANUFACTURING COMPANY, INC. INDIANAPOLIS, IN U.S.A. | | | |
| HEAT TREATMENT ~ | | | DESCRIPTION: SCHEMATICS, VM1, VM2, VM3 | | | |
| FIRST USED ON: VM1 | EXCEPT AS NOTED: WELDING TOLERANCE MUST BE AS FOLLOWS ±.12 | THIRD ANGLE PROJECTION | DRAWN: DEO 5/13/05 | CHECKED: SJT 5/20/05 | APPROVED: DEO 5/23/05 | |
| | | | SCALE: NONE | SIZE: D | DRAWING: 003-2022-011 | SHT 16 OF 16 REV. K |
| | | | UNIT OF MEAS: EA | | | |

# Harness Assembly Drawings

## Hurco VM1 Machining Center


| | | | | | |
|---|---|---|---|---|---|
| Ass'y., Max Control I/F Harness, | 002-4403-038—Rev. D | Page 4 - 3 | Harness, Door Interlock, | 423-4401-733—Rev. A | Page 4 - 31 |
| Ass'y., 105" ISA CNC/Console Harness, | 002-4403-039—Rev. C | Page 4 - 4 | Harness, Air Relief Solenoid, | 423-4401-734—Rev. A | Page 4 - 32 |
| Harness, ISA/DSP TTL I/O, | 423-4400-002—Rev. B | Page 4 - 5 | Harness, ATC CW/CCW Motor Power, | 423-4401-735—Rev. B | Page 4 - 33 |
| Harness, ISA/DSP Servo I/O, | 423-4400-006—Rev. B | Page 4 - 6 | Harness, Disk ATC, | 423-4401-736—Rev. A | Page 4 - 34 |
| Harness, LCD Power, FPN PCB, | 423-4401-172—Rev. A | Page 4 - 7 | Harness, DC Power, | 423-4401-737—Rev. A | Page 4 - 35 |
| Harness, Machine Function to FPN/J7, | 423-4401-173—Rev. B | Page 4 - 8 | Harness, Spindle Motor Fan, | 423-4401-738—Rev. A | Page 4 - 36 |
| Harness, Floppy Drive Signal, | 423-4401-174—Rev. A | Page 4 - 9 | Harness, Lube, | 423-4401-739—Rev. A | Page 4 - 37 |
| Harness, Trackball, | 423-4401-175—Rev. B | Page 4 - 10 | Harness, IEC FEM Power, | 423-4401-740—Rev. A | Page 4 - 38 |
| Harness, FDD Power, | 423-4401-176—Rev. B | Page 4 - 11 | Harness, Air Pressure, | 423-4401-741—Rev. A | Page 4 - 39 |
| Harness, Program Entry Keyboard, | 423-4401-177—Rev. B | Page 4 - 12 | Harness, Spindle Head Fan, | 423-4401-749—Rev. A | Page 4 - 40 |
| Harness, E-Stop, Console, | 423-4401-178—Rev. D | Page 4 - 13 | Harness, Auger Control, Prepare, | 423-4401-750—Rev. B | Page 4 - 41 |
| Harness, E-Stop 2", | 423-4401-179—Rev. C | Page 4 - 14 | Harness, Flood Control, Prepare, | 423-4401-751—Rev. B | Page 4 - 42 |
| Harness, Max4 Remote Jog, | 423-4401-180—Rev. G | Page 4 - 15 | Harness, Transformer 230V Primary, | 423-4401-752—Rev. A | Page 4 - 43 |
| Harness, CPI to FPN, | 423-4401-186—Rev. A | Page 4 - 17 | Harness, Axis Limit Switch VM1, | 423-4401-753—Rev. A | Page 4 - 44 |
| Harness, IOIF J2, | 423-4401-240—Rev. A | Page 4 - 18 | Harness, Axis Limit Switch VM1, | 423-4401-754—Rev. A | Page 4 - 44 |
| Harness, FDD Signal, 650MM, | 423-4401-721—Rev. A | Page 4 - 19 | Harness, Axis Limit Switch VM1, | 423-4401-755—Rev. A | Page 4 - 44 |
| Harness, FDD Power, 550MM, | 423-4401-722—Rev. A | Page 4 - 20 | Harness, X Y Z Axis, 1CN to MX4/TB1, | 423-4401-756—Rev. A | Page 4 - 45 |
| Harness, FPD Power, 60MM, | 423-4401-723—Rev. A | Page 4 - 21 | Harness, X Y Z Axis, 1CN to MX4/TB1, | 423-4401-757—Rev. A | Page 4 - 45 |
| Harness, Program Entry, 425MM, | 423-4401-724—Rev. A | Page 4 - 22 | Harness, X Y Z Axis, 1CN to MX4/TB1, | 423-4401-758—Rev. A | Page 4 - 45 |
| Harness, Console Jog, 475MM, | 423-4401-725—Rev. A | Page 4 - 23 | Harness, Spindle Motor Encoder, | 423-4401-759—Rev. A | Page 4 - 46 |
| Harness, Machine Function to FPN, 685MM, | 423-4401-726—Rev. A | Page 4 - 24 | Harness, X, Y Axis Motor Encoder, | 423-4401-760—Rev. A | Page 4 - 47 |
| Harness, Touchscreen Extension, 135MM, | 423-4401-727—Rev. A | Page 4 - 25 | Harness, X, Y Axis Motor Encoder, | 423-4401-761—Rev. A | Page 4 - 47 |
| Harness, Pushbutton Interconnect, Max, | 423-4401-728—Rev. A | Page 4 - 26 | Harness, Z Axis Motor Encoder, | 423-4401-762—Rev. B | Page 4 - 48 |
| Harness, DCIO J1, VM1, | 423-4401-729—Rev. A | Page 4 - 27 | Harness, Main Disconnect, | 423-4401-763—Rev. A | Page 4 - 49 |
| Harness, DCIO J2, VM1, | 423-4401-730—Rev. A | Page 4 - 28 | Harness, X, Y Axis Motor Power VM1, | 423-4401-764—Rev. B | Page 4 - 50 |
| Harness, IOIF J1, VM1, | 423-4401-731—Rev. A | Page 4 - 29 | Harness, X, Y Axis Motor Power VM1, | 423-4401-765—Rev. B | Page 4 - 50 |
| Harness, Detented Jog E-Stop Bypass, | 423-4401-732—Rev. A | Page 4 - 30 | Harness, Spindle Motor Power, | 423-4401-767—Rev. A | Page 4 - 51 |

| | | |
|---|---|---|
| Harness, Max4 to Spindle Drive, | 423-4401-768—Rev. B . . . . | Page 4 - 52 |
| Harness, TR1 Main Power, | 423-4401-791—Rev. B . . . . | Page 4 - 53 |
| Harness, Console Jog E-Stop Bypass, 4 Pin, | 423-4401-793—Rev. A . . . . | Page 4 - 54 |
| Harness, Worklight Receptacle, 110V, | 423-4401-822—Rev. B . . . . | Page 4 - 55 |
| Harness, Z-Axis Motor Power, VM1, | 423-4401-865—Rev. B . . . . | Page 4 - 56 |
| Harness, Z-Axis, 1CN to MX4/TB1, | 423-4401-866—Rev. A . . . . | Page 4 - 57 |
| Harness, Spindle Head SWS, | 423-4401-955—Rev. A . . . . | Page 4 - 58 |
| Harness, Oil Chiller Interface, | 423-4401-984—Rev. B . . . . | Page 4 - 59 |
| Harness, Dual DC Power, | 423-4401-993—Rev. A . . . . | Page 4 - 60 |
| Harness, RMB, IOIF J2, | 423-4401-996—Rev. A . . . . | Page 4 - 61 |
| Harness, Spindle I/O Signal, | 423-4401-997—Rev. A . . . . | Page 4 - 62 |
| Harness, Axis Motor Encoder VMX 24/30, | 423-4405-111—Rev. C . . . . | Page 4 - 63 |
| Harness, Spindle Head I/O Signal, | 423-4405-259—Rev. A . . . . | Page 4 - 64 |
| Harness, Unclamp/Purge/BLR Sol, | 423-4405-260—Rev. A . . . . | Page 4 - 65 |

# Ass'y., Max Control I/F Harness, 002-4403-038—Rev. D

| SIZE | DRAWING | SHT. | REV. |
|---|---|---|---|
| D | 002-4403-038 | 1 OF 1 | D |

PROPRIETARY INFORMATION
INFORMATION CONTAINED HEREIN IS THE PROPERTY OF HURCO MANUFACTURING COMPANY, INC. NO REPRODUCTION OR DISCLOSURE OF THIS INFORMATION SHALL BE MADE BY THE RECIPIENT TO ANY OTHER PERSON OR ORGANIZATION WITHOUT THE PRIOR WRITTEN CONSENT OF HURCO MANUFACTURING COMPANY, INC.

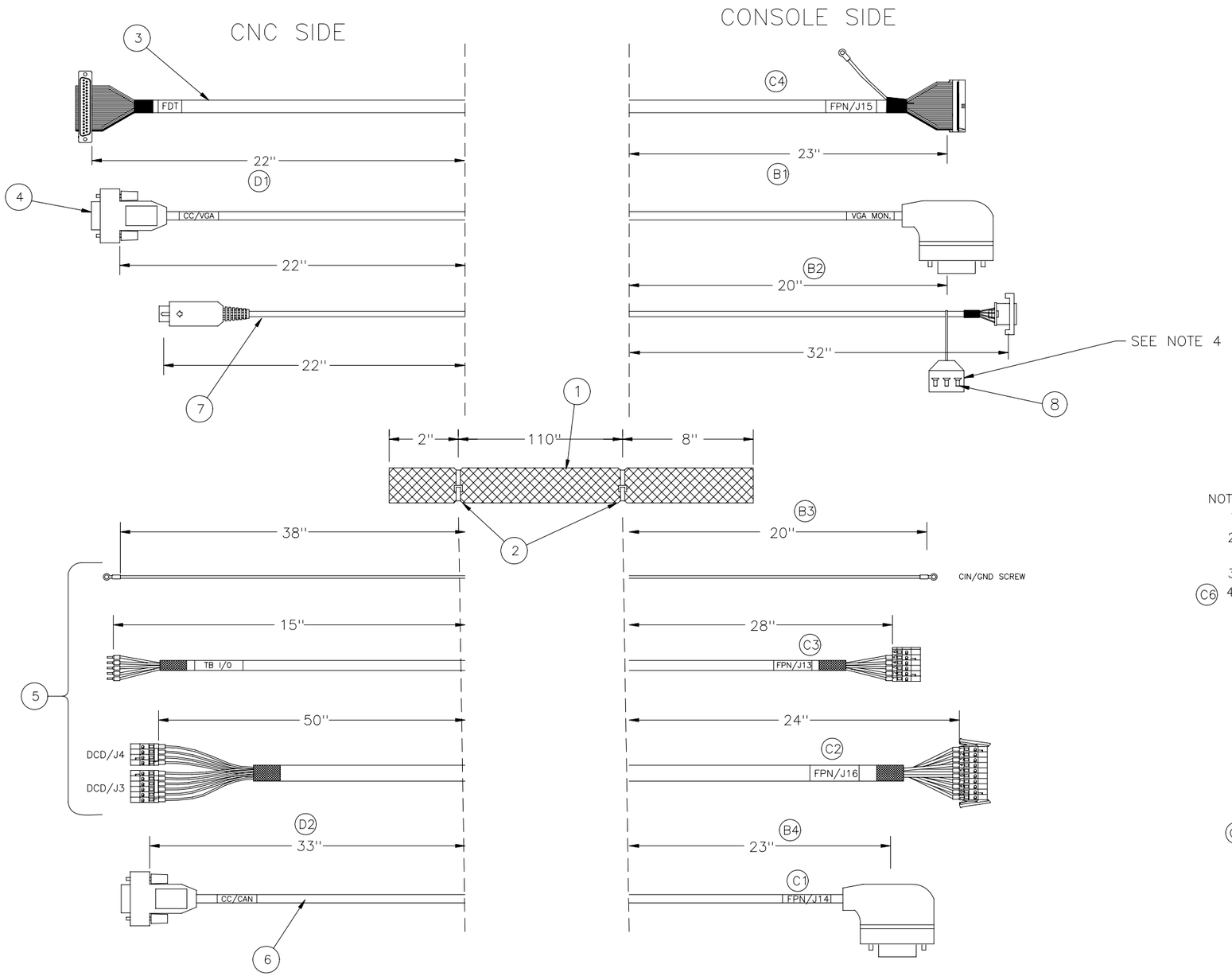


NOTES:

1. DIMENSIONS ARE STRAIGHT-LINE LENGTH, TOLERANCE ±1''.
2. FINISHED ASSEMBLY TO BE MARKED WITH HURCO PART NUMBER AND REVISION LETTER USING PERMANENT INK.
3. SECURE SLEEVING WITH TIE WRAPS AS SHOWN.
4. BAG ITEM 8 AND ATTACH AS SHOWN TO ITEM 7

C6

C5

| QTY. | PART NUMBER | ITEM DESCRIPTION | ITEM |
|---|---|---|---|
| 3 | 107-5014-001 | FHPMS, M2.5 X .45 P X 6.0 LG | 8 |
| 1 | 423-4401-719 | HARNESS, ISA KEYBOARD EXTENSION, MAX | 7 |
| 1 | 423-4401-715 | HARNESS, VM1 CANBUS PENDANT | 6 |
| 1 | 423-4401-716 | HARNESS, VM1 DC/ESTOP PENDANT | 5 |
| 1 | 423-4401-717 | HARNESS, VM1 VIDEO PENDANT | 4 |
| 1 | 423-4401-718 | HARNESS, VM1 FDD SIGNAL | 3 |
| 2 | 406-5001-006 | TIE WRAP, MEDIUM | 2 |
| 120'' | 406-6010-006 | SLEEVE, WOVEN 1-3/4'' DIA | 1 |

PARTS LIST

| REV | E.C.N. NO. | REVISION DESCRIPTION | REV BY | DATE | CHK BY | DATE | APP'D BY | DATE | DF |
|---|---|---|---|---|---|---|---|---|---|
| D | 15608 | 1) WAS 18'' 2) WAS 24'' | WRS | 22 MAY 03 | FWG | 20 MAY 03 | FWG | 27 MAY 03 | |
| C | 15535 | (4) REVISED HARNESS; (5) ITEM 8 ADDED; (6) NOTE 4 ADDED (1) WAS CIN/J20; (2) WAS CIN/J2; (3) WAS CIN/J5; | JLW | 27 NOV 02 | FWG | 05 DEC 02 | PFB | 05 DEC 02 | |
| B | 15352 | 1) WAS 28''; 2) WAS 24''; 3) WAS 36''; 4) WAS 32'' | SJT | 25 JUN 02 | DEO | 26 JUN 02 | DEO | 27 JUN 02 | |
| A | – | PRELIMINARY | | | | | | | |

SURFACE TREATMENT

HEAT TREATMENT

FIRST USED ON: VM1

EXCEPT AS NOTED: ALL DIMENSIONS IN INCHES
TOLERANCE
DECIMAL
.0 ±.0300
.00 ±.0150
.000 ±.0050
.0000 ±.0005
ANGULAR ± 0°30'
BREAK ALL SHARP EDGES

THIRD ANGLE PROJECTION

HURCO MANUFACTURING COMPANY, INC.
INDIANAPOLIS, IN U.S.A.

DESCRIPTION: ASSY, MAX CONTROL I/F HARNESS

| DRAWN | DATE | CHECKED | DATE | APPROVED | DATE |
|---|---|---|---|---|---|
| SJT | 12/18/01 | WCM | 12/18/01 | DEO | 12/18/01 |

| SCALE | SIZE | DRAWING | SHT. | REV. |
|---|---|---|---|---|
| NONE | D | 002-4403-038 | 1 of 1 | D |

UNIT OF MEAS: EA

# Ass'y., 105" ISA CNC/Console Harness, 002-4403-039—Rev. C

| SIZE | DRAWING | SHT. | REV. |
|---|---|---|---|
| D | 002-4403-039 | 1 OF 1 | C |

PROPRIETARY INFORMATION
INFORMATION CONTAINED HEREIN IS THE PROPERTY OF HURCO MANUFACTURING COMPANY, INC. NO REPRODUCTION OR DISCLOSURE OF THIS INFORMATION SHALL BE MADE BY THE RECIPIENT TO ANY OTHER PERSON OR ORGANIZATION WITHOUT THE PRIOR WRITTEN CONSENT OF HURCO MANUFACTURING COMPANY, INC.

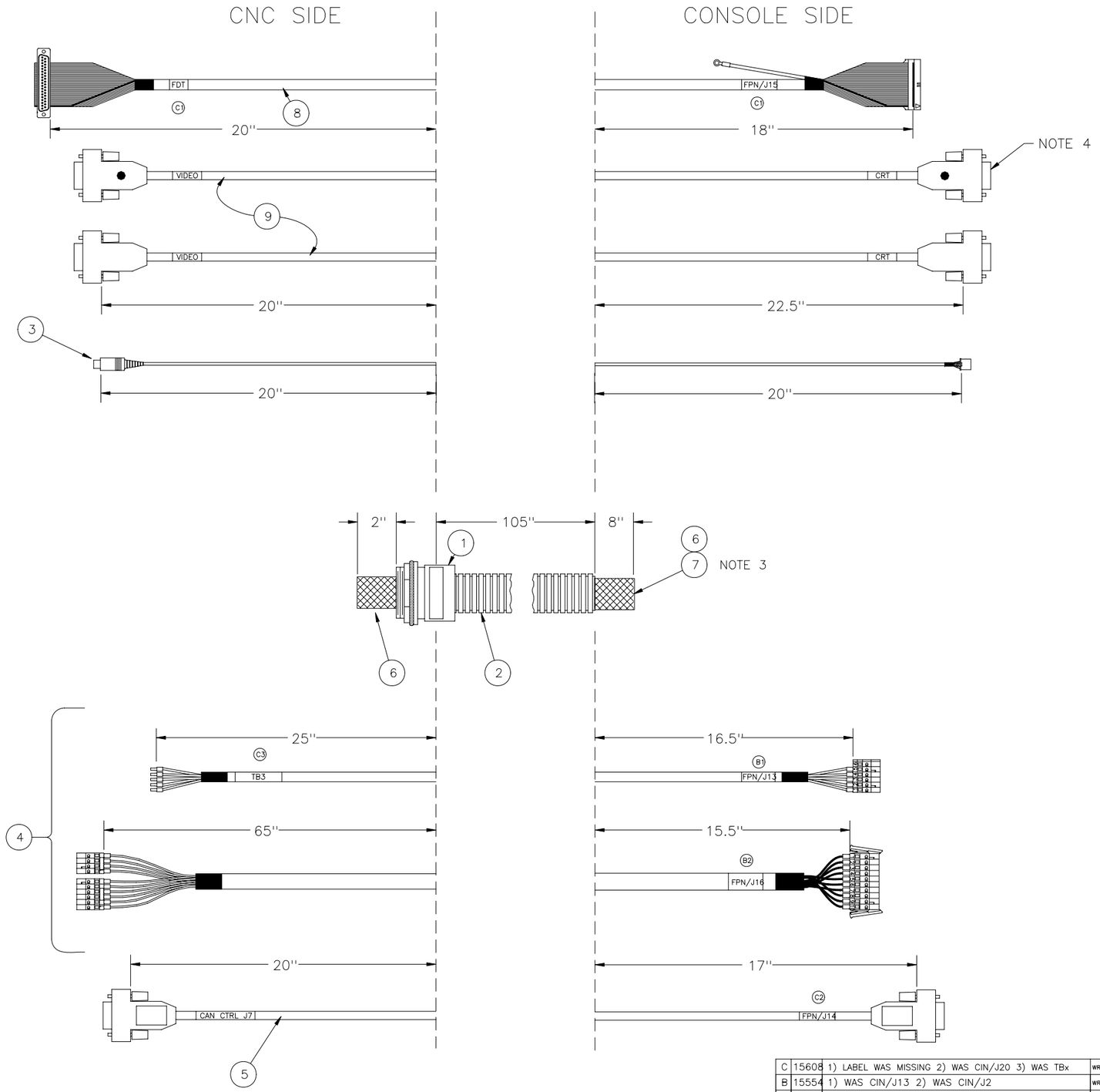


NOTES:

1. DIMENSIONS ARE STRAIGHT-LINE LENGTH, TOLERANCE ±1''.
2. FINISHED ASSEMBLY TO BE MARKED WITH HURCO PART NUMBER AND REVISION LETTER USING PERMANENT INK.
3. SECURE SLEEVING WITH TIE WRAPS.
4. MARK ONE OF THE VIDEO CABLES (ITEM 9) WITH A DOT AT BOTH ENDS, BOTH SIDES OF THE CONNECTOR SHELL.

| REV | E.C.N. NO. | REVISION DESCRIPTION | REV BY | DATE | CHK BY | DATE | APP'D BY | DATE | DF |
|---|---|---|---|---|---|---|---|---|---|
| C | 15608 | 1) LABEL WAS MISSING 2) WAS CIN/J20 3) WAS TBx | WRS | 25 MAY 03 | FWG | 27 MAY 03 | FWG | 27 MAY 03 | |
| B | 15554 | 1) WAS CIN/J13 2) WAS CIN/J2 | WRS | 30 JAN 03 | FWG | 31 JAN 03 | FWG | 31 JAN 03 | |
| A | 15352 | RELEASE | | | | | | | |

| QTY. | PART NUMBER | ITEM DESCRIPTION | ITEM |
|---|---|---|---|
| 2 | 423-4401-786 | HARNESS, ISA VIDEO SIGNAL, 147.5'' | 9 |
| 1 | 423-4401-787 | HARNESS, ISA FDD PENDANT, 143'' | 8 |
| 2 | 406-5001-006 | TIE WRAP, MEDIUM | 7 |
| 115'' | 406-6010-006 | SLEEVE, WOVEN 1-3/4'' DIA | 6 |
| 1 | 423-4401-788 | HARNESS, ISA CONS CANBUS, 142''. | 5 |
| 1 | 423-4401-789 | HARNESS, ISA CONSOLE DC POWER, 185.5'' | 4 |
| 1 | 423-4401-790 | HARNESS, ISA KEYBOARD EXTENSION, 145'' | 3 |
| 105'' | 408-0171-006 | CONDUIT, 1-1/2'' FLEXIBLE CORRLOCK | 2 |
| 1 | 408-0171-012 | CONNECTOR, 1-1/2'' STRAIGHT CORRLOCK | 1 |

PARTS LIST

SURFACE TREATMENT

HEAT TREATMENT

FIRST USED ON: VMX1

EXCEPT AS NOTED: ALL DIMENSIONS IN INCHES TOLERANCE DECIMAL .0 ±.0300, .00 ±.0150, .000 ±.0050, .0000 ±.0005, ANGULAR ± 0°30' BREAK ALL SHARP EDGES

THIRD ANGLE PROJECTION

HURCO MANUFACTURING COMPANY, INC. INDIANAPOLIS, IN U.S.A.

DESCRIPTION: ASSY, 105'' ISA CNC/CONSOLE HARNESS

| DRAWN | DATE | CHECKED | DATE | APPROVED | DATE |
|---|---|---|---|---|---|
| ROD | 4-24-02 | SJT | 5-29-02 | DEO | 5-29-02 |

| SCALE | SIZE | DRAWING | SHT. | REV. |
|---|---|---|---|---|
| NONE | D | 002-4403-039 | 1 OF 1 | C |

UNIT OF MEAS: EA

| SIZE | DRAWING | SHT. | REV. | PROPRIETARY INFORMATION |
|---|---|---|---|---|
| C | 423-4400-002 | 1 OF 1 | | INFORMATION CONTAINED HEREIN IS THE PROPERTY OF HURCO MANUFACTURING COMPANY, INC. NO REPRODUCTION OR DISCLOSURE OF THIS INFORMATION SHALL BE MADE BY THE RECIPIENT TO ANY OTHER PERSON OR ORGANIZATION WITHOUT THE PRIOR WRITTEN CONSENT OF HURCO MANUFACTURING COMPANY, INC. |

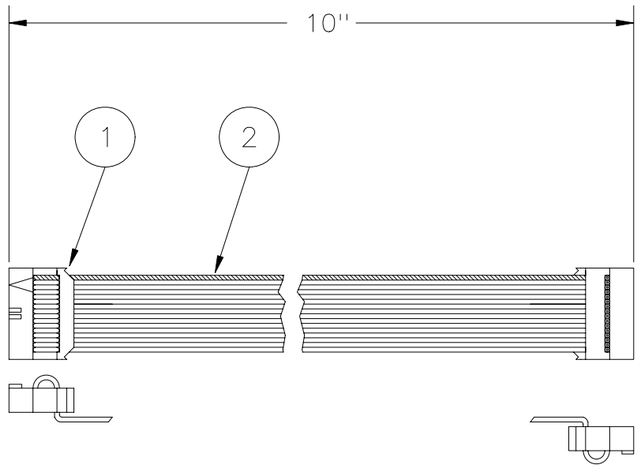


NOTES:
1. OVERALL DIMENSION IS STRAIGHT LINE LENGTH OF HARNESS, TOLERANCE OF ±1/4''
2. LABEL HARNESS WITH HURCO PART NUMBER.
3. PLACE RED STRIPE AT PIN 1, BOTH ENDS.

PARTS LIST

| QTY. | PART NUMBER | ITEM DESCRIPTION | ITEM |
|---|---|---|---|
| 11'' | 406-1560-011 | CABLE, GRAY 16-COND RIBBON | 2 |
| (B) 2 | 406-0806-019 | CONNECTOR, 16POS SCKT W/STRAIN RLF | 1 |

| REV | E.C.N. NO. | REVISION DESCRIPTION | REV BY | DATE | CHK BY | DATE | APPD BY | DATE | DF |
|---|---|---|---|---|---|---|---|---|---|
| B | 12943 | ITEM #1 WAS 406-0802-044 | DAB | 12/17/93 | | | | | |
| A | 12857 | ORIGINAL RELEASE | | | | | | | |

CN 8135

SURFACE TREATMENT

HEAT TREATMENT

FIRST USED ON: MAX3 ISA

EXCEPT AS NOTED: ALL DIMENSIONS IN INCHES
TOLERANCE
DECIMAL
.0 ±.0300
.00 ±.0150
.000 ±.0050
.0000 ±.0005
ANGULAR ± 0°30'
BREAK ALL SHARP EDGES

THIRD ANGLE PROJECTION

HURCO MANUFACTURING COMPANY, INC.
INDIANAPOLIS, IN U.S.A.

DESCRIPTION: HARNESS, ISA/DSP TTL I/O

| DRAWN | DATE | CHECKED | DATE | APPROVED | DATE |
|---|---|---|---|---|---|
| D.A.B. | 01NOV93 | M.F.C. | 05NOV93 | M.F.C. | 08NOV93 |

| SCALE | SIZE | DRAWING | SHT. | REV. |
|---|---|---|---|---|
| NONE | C | 423-4400-002 | 1 OF 1 | |

UNIT OF MEAS: PC

| SIZE | DRAWING | SHT. | REV. |
|---|---|---|---|
| C | 423-4400-006 | 1 OF 1 | |

PROPRIETARY INFORMATION

INFORMATION CONTAINED HEREIN IS THE PROPERTY OF HURCO MANUFACTURING COMPANY, INC. NO REPRODUCTION OR DISCLOSURE OF THIS INFORMATION SHALL BE MADE BY THE RECIPIENT TO ANY OTHER PERSON OR ORGANIZATION WITHOUT THE PRIOR WRITTEN CONSENT OF HURCO MANUFACTURING COMPANY, INC.

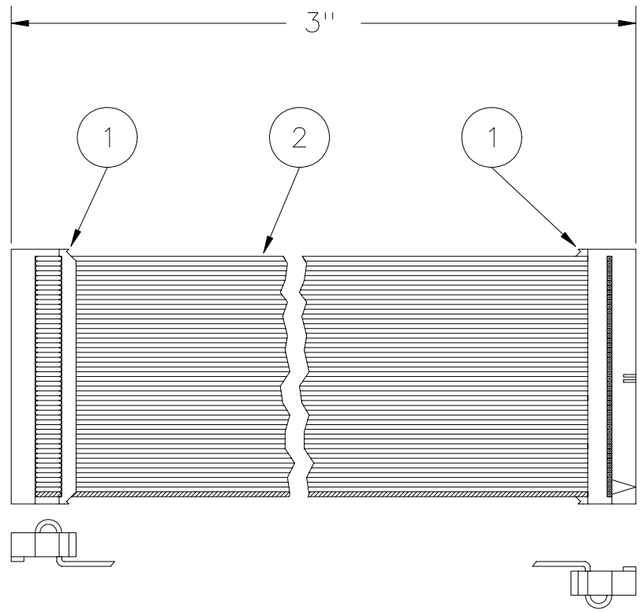


NOTES:
1. OVERALL DIMENSION IS STRAIGHT LINE LENGTH OF HARNESS, TOLERANCE OF ±1/4''.
2. LABEL HARNESS WITH HURCO PART NUMBER.
3. PLACE RED STRIPE AT PIN 1, BOTH ENDS.

| QTY. | PART NUMBER | ITEM DESCRIPTION | ITEM |
|---|---|---|---|
| | | PARTS LIST | |
| 4'' | 406-1560-019 | CABLE, GRAY 50-COND RIBBON | 2 |
| 2 | 406-0806-024 | CONNECTOR, 50 POS SCKT W/STRAIN RELIEF | 1 |

(B)

| REV | P.I.N. NO. | REVISION DESCRIPTION | REV BY | DATE | CHK BY | DATE | APPD BY | DATE | DF |
|---|---|---|---|---|---|---|---|---|---|
| B | 12943 | ITEM #1 WAS 406-0802-049 | DAB | 12/17/93 | | | | | |
| A | 12857 | ORIGINAL RELEASE | | | | | | | |

CN 8138

SURFACE TREATMENT

HEAT TREATMENT

FIRST USED ON: MAX3 ISA

EXCEPT AS NOTED: ALL DIMENSIONS IN INCHES
TOLERANCE
DECIMAL
.0 ±.0300
.00 ±.0150
.000 ±.0050
.0000 ±.0005
ANGULAR ± 0°30'
BREAK ALL SHARP EDGES

THIRD ANGLE PROJECTION

HURCO MANUFACTURING COMPANY, INC.
INDIANAPOLIS, IN U.S.A.

DESCRIPTION: HARNESS, ISA/DSP SERVO I/O

| DRAWN | DATE | CHECKED | DATE | APPROVED | DATE |
|---|---|---|---|---|---|
| D.A.B. | 01NOV93 | M.F.C. | 05NOV93 | M.F.C. | 08NOV93 |

| SCALE | SIZE | DRAWING | SHT. | REV. |
|---|---|---|---|---|
| NONE | C | 423-4400-006 | 1 OF 1 | |

UNIT OF MEAS: PC

# Harness, LCD Power, FPN PCB, 423-4401-172—Rev. A

| SIZE | DRAWING | SHT. | REV. |
|---|---|---|---|
| B | 423–4401–172 | 1 OF 1 | A |

PROPRIETARY INFORMATION

INFORMATION CONTAINED HEREIN IS THE PROPERTY OF HURCO MANUFACTURING COMPANY, INC. NO REPRODUCTION OR DISCLOSURE OF THIS INFORMATION SHALL BE MADE BY THE RECIPIENT TO ANY OTHER PERSON OR ORGANIZATION WITHOUT THE PRIOR WRITTEN CONSENT OF HURCO MANUFACTURING COMPANY, INC.

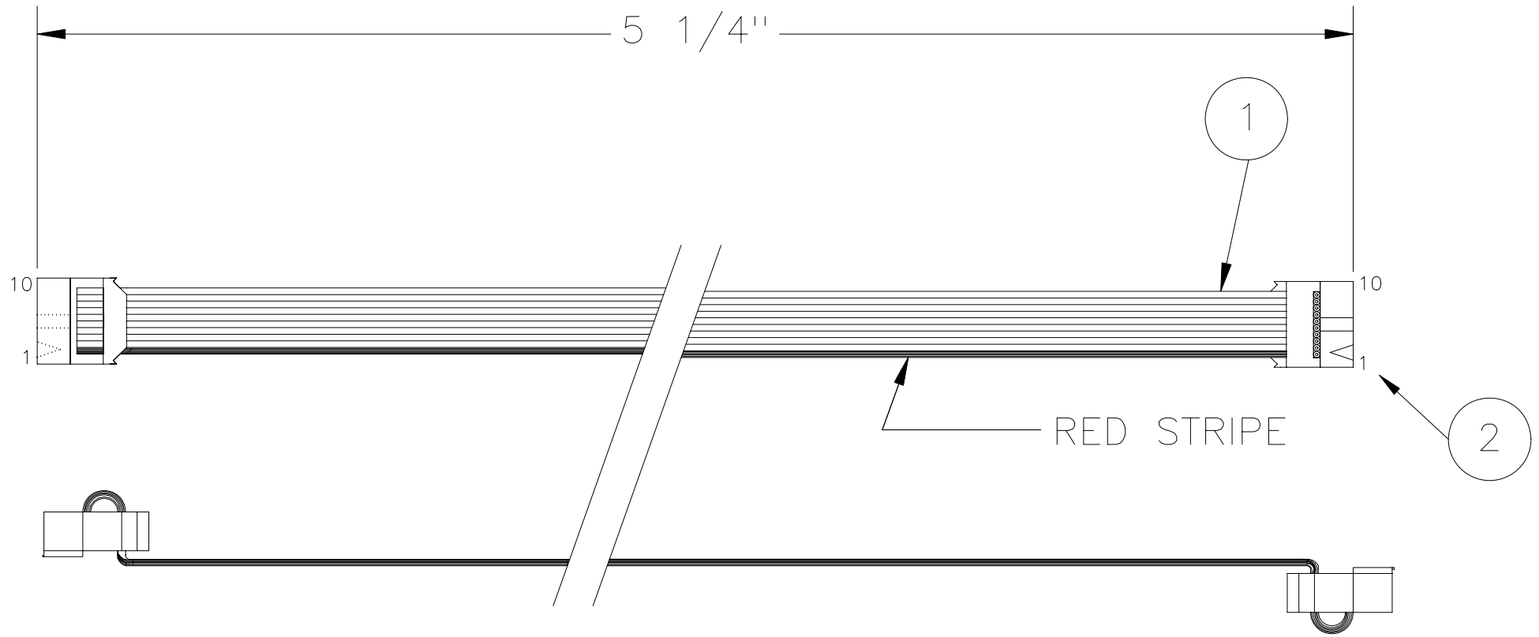


NOTE 1. PLACE RED STRIPE AT PIN 1, BOTH ENDS.
2. LABEL HARNESS WITH HURCO PART NUMBER AND REVISION.
3. OVERALL LENGTH IS 5 1/4"±1/4".

PARTS LIST

| ITEM | PART NUMBER | ITEM DESCRIPTION | QTY. |
|---|---|---|---|
| 2 | 406–0806–017 | CONNECTOR, 10 PIN | 2 |
| 1 | 406–1560–008 | CABLE, GRAY 10–COND RIBBON | 6 1/4" |

| REV | E.C.N. NO. | REVISION DESCRIPTION | REV BY | DATE | CHK BY | DATE | APPD BY | DATE | DF |
|---|---|---|---|---|---|---|---|---|---|
| A | 14214 | ORIGINAL RELEASE | | | | | | | |

SURFACE TREATMENT

HEAT TREATMENT

FIRST USED ON MAX4

EXCEPT AS NOTED: ALL DIMENSIONS IN INCHES TOLERANCE
DECIMAL
.0 ?.0300
.00 ?.0150
.000 ?.0050
.0000 ?.0005
ANGULAR ? 0?30'
BREAK ALL SHARP EDGES

THIRD ANGLE PROJECTION

HURCO MANUFACTURING COMPANY, INC.
INDIANAPOLIS, IN U.S.A.

DESCRIPTION: HARNESS, LCD POWER, FPN PCB

| DRAWN | DATE | CHECKED | DATE | APPROVED | DATE |
|---|---|---|---|---|---|
| PES | 3/6/98 | JDN | 3/6/98 | | |

| SCALE | SIZE | DRAWING | SHT. | REV. |
|---|---|---|---|---|
| NONE | B | 423–4401–172 | 1 OF 1 | A |

UNIT OF MEAS. PC

CN 8598

| SIZE | DRAWING | SHT. | REV. | PROPRIETARY INFORMATION |
|---|---|---|---|---|
| C | 423-4401-173 | 1 OF 1 | B | INFORMATION CONTAINED HEREIN IS THE PROPERTY OF HURCO MANUFACTURING COMPANY, INC. NO REPRODUCTION OR DISCLOSURE OF THIS INFORMATION SHALL BE MADE BY THE RECIPIENT TO ANY OTHER PERSON OR ORGANIZATION WITHOUT THE PRIOR WRITTEN CONSENT OF HURCO MANUFACTURING COMPANY, INC. |

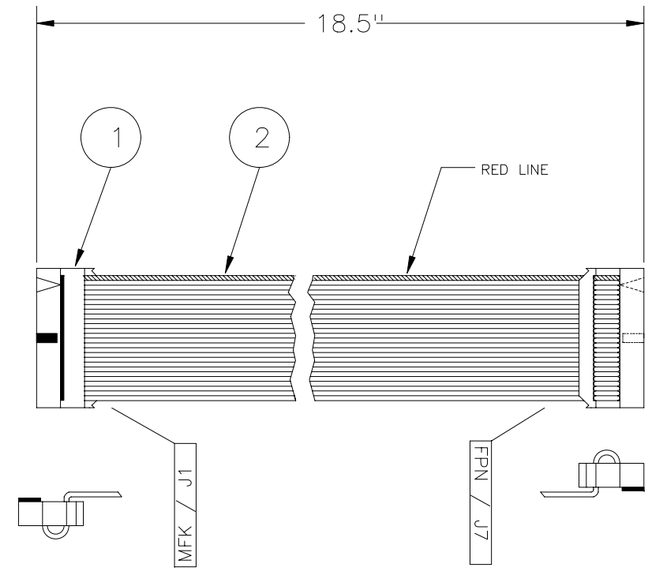


NOTE 3 NOTE 3

NOTES:
1. OVERALL DIMENSION IS STRAIGHT LINE LENGTH OF HARNESS, 18.5'', TOLERANCE OF ±1/4''.
2. LABEL HARNESS WITH HURCO PART NUMBER AND REVISION.
3. LABEL CONNECTORS AS SHOWN.

| QTY. | PART NUMBER | ITEM DESCRIPTION | ITEM |
|---|---|---|---|
| 19.5'' | 406-1560-013 | CABLE, RIBBON 24 CONDUCTOR | 2 |
| (B) 2 | 406-0802-086 | SOCKET, 24 POS. IDC W/STRAIN RELIEF | 1 |

PARTS LIST

| REV | P.I.N. NO. | REVISION DESCRIPTION | REV BY | DATE | CHK BY | DATE | APPD BY | DATE | DF |
|---|---|---|---|---|---|---|---|---|---|
| B | 14309 | ITEM 1 WAS 406-0802-084 | JCR | 06/98 | JDN | 06/98 | | | |
| A | 14214 | ORIGINAL RELEASE | | | | | | | |

CN 8599

SURFACE TREATMENT

HEAT TREATMENT

FIRST USED ON MAX 4

EXCEPT AS NOTED: ALL DIMENSIONS IN INCHES TOLERANCE DECIMAL .0 ±.0300, .00 ±.0150, .000 ±.0050, .0000 ±.0005, ANGULAR ± 0°30', BREAK ALL SHARP EDGES

THIRD ANGLE PROJECTION

HURCO MANUFACTURING COMPANY, INC. INDIANAPOLIS, IN U.S.A.

DESCRIPTION: HARNESS, MACHINE FUNCTION TO FPN/J7

| DRAWN | DATE | CHECKED | DATE | APPROVED | DATE |
|---|---|---|---|---|---|
| PES | 3/6/98 | JDN | 3/6/98 | FWG | 3/10/98 |

| SCALE | SIZE | DRAWING | SHT. | REV. |
|---|---|---|---|---|
| NONE | C | 423-4401-173 | 1 OF 1 | B |

UNIT OF MEAS: PC

| SIZE | DRAWING | SHT. | REV. |
|---|---|---|---|
| C | 423-4401-174 | 1 OF 1 | A |

PROPRIETARY INFORMATION

INFORMATION CONTAINED HEREIN IS THE PROPERTY OF HURCO MANUFACTURING COMPANY, INC. NO REPRODUCTION OR DISCLOSURE OF THIS INFORMATION SHALL BE MADE BY THE RECIPIENT TO ANY OTHER PERSON OR ORGANIZATION WITHOUT THE PRIOR WRITTEN CONSENT OF HURCO MANUFACTURING COMPANY, INC.

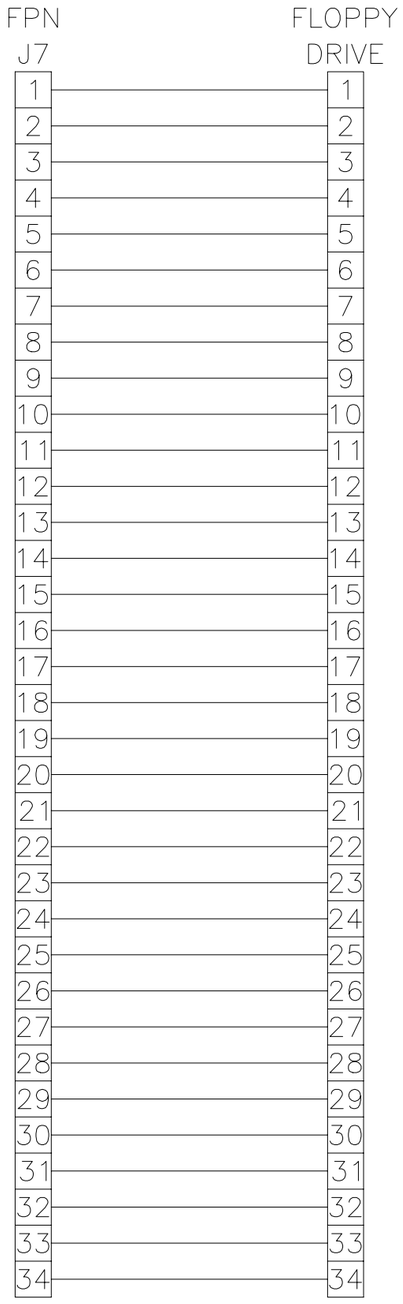


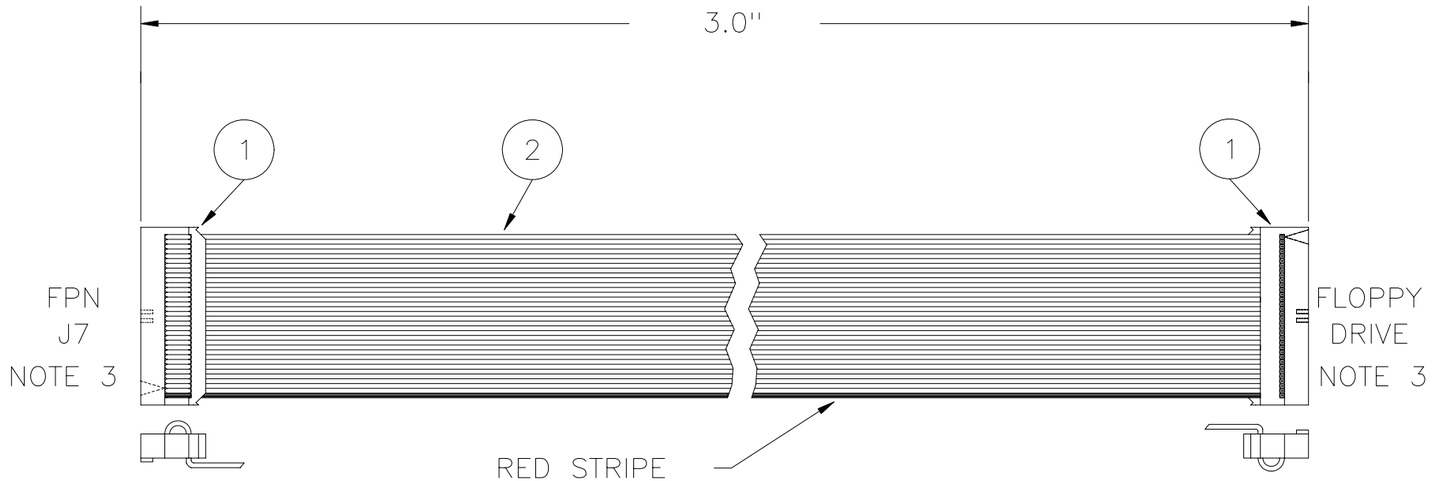


NOTES:
1. OVERALL DIMENSION IS STRAIGHT LINE LENGTH OF HARNESS, TOLERANCE OF ±1/4".
2. LABEL HARNESS WITH HURCO PART NUMBER AND REVISION.
3. LABEL CONNECTORS AS SHOWN.

| QTY. | PART NUMBER | ITEM DESCRIPTION | ITEM |
|---|---|---|---|
| 3.5" | 406-1561-010 | RIBBON CABLE, 34 COND. | 2 |
| 2 | 406-0806-022 | CONNECTOR, FEMALE 34 PIN KEYED | 1 |

PARTS LIST

| REV | P.I.N. NO. | REVISION DESCRIPTION | REV BY | DATE | CHK BY | DATE | APPD BY | DATE | DF |
|---|---|---|---|---|---|---|---|---|---|
| A | 14214 | ORIGINAL RELEASE | | | | | | | |

SURFACE TREATMENT

HEAT TREATMENT

FIRST USED ON
MAX 4

EXCEPT AS NOTED:
ALL DIMENSIONS IN INCHES
TOLERANCE
DECIMAL
.0 ±.0300
.00 ±.0150
.000 ±.0050
.0000 ±.0005
ANGULAR ± 0°30'
BREAK ALL SHARP EDGES

THIRD ANGLE PROJECTION

HURCO MANUFACTURING COMPANY, INC.
INDIANAPOLIS, IN U.S.A.

DESCRIPTION
HARNESS, FLOPPY DRIVE SIGNAL

| DRAWN | DATE | CHECKED | DATE | APPROVED | DATE |
|---|---|---|---|---|---|
| PES | 3/6/98 | JDN | 3/6/98 | | |

| SCALE | SIZE | DRAWING | SHT. | REV. |
|---|---|---|---|---|
| NONE | C | 423-4401-174 | 1 OF 1 | A |

UNIT OF MEAS
PC

CN
8600

| SIZE | DRAWING | SHT. | REV. |
|---|---|---|---|
| C | 423–4401–175 | 1 OF 1 | B |

PROPRIETARY INFORMATION
INFORMATION CONTAINED HEREIN IS THE PROPERTY OF HURCO MANUFACTURING COMPANY, INC. NO REPRODUCTION OR DISCLOSURE OF THIS INFORMATION SHALL BE MADE BY THE RECIPIENT TO ANY OTHER PERSON OR ORGANIZATION WITHOUT THE PRIOR WRITTEN CONSENT OF HURCO MANUFACTURING COMPANY, INC.

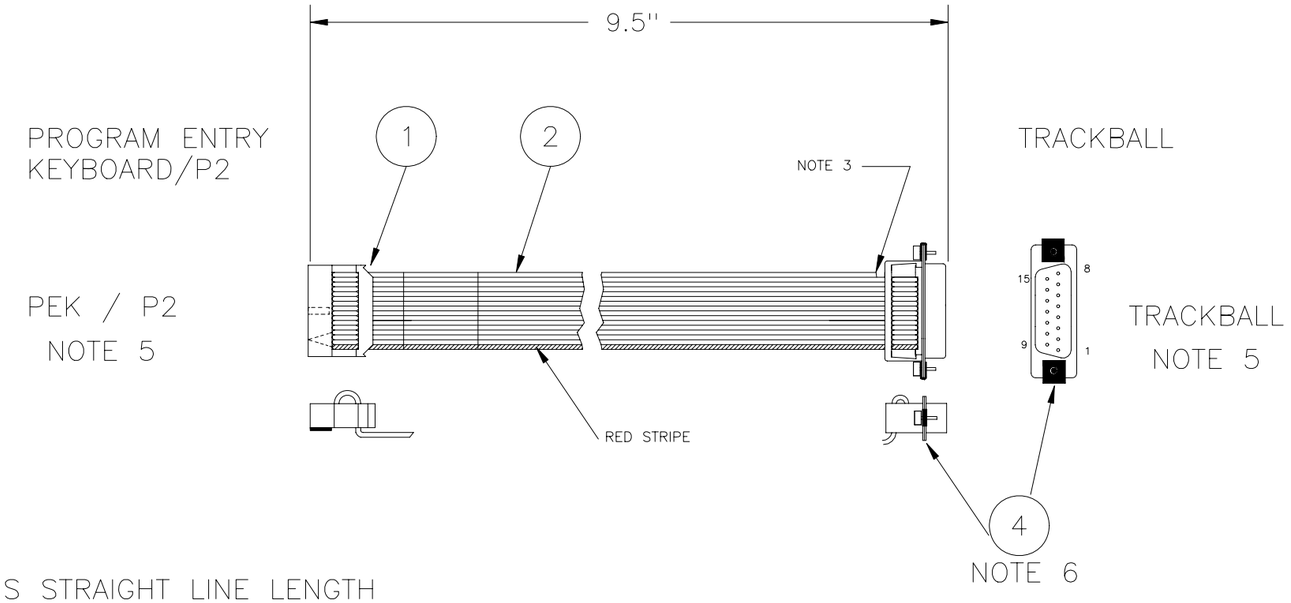


NOTES:
1. OVERALL DIMENSION IS STRAIGHT LINE LENGTH OF HARNESS, TOLERANCE OF ±1/4''.
2. PART NUMBER 406–1561–001 16 COND. RIBBON CABLE MAY BE SUBSTITUTED AS ITEM #2.
3. TRIM CABLE AS SHOWN TO ALLOW CABLE TO FIT IN ITEM 3.
4. LABEL HARNESS WITH HURCO PART NUMBER AND REVISION.
5. LABEL CONNECTORS AS SHOWN.
(B2) 6. INSTALL ITEM #4 SCREW RETAINER KIT ON ITEM #3 CONNECTOR.

PARTS LIST

| QTY. | PART NUMBER | ITEM DESCRIPTION | ITEM |
|---|---|---|---|
| (B1) 1 | 406–0903–121 | KIT, 4–40 MALE SCREW RETAINER | 4 |
| 1 | 406–0903–136 | CONNECTOR, 15 POS RECEPTACLE W/STRAIN RLF | 3 |
| 10.5'' | 406–1559–001 | CABLE, RIBBON 16 CONDUCTOR | 2 |
| (B3) 1 | 406–0802–088 | SOCKET, 16 POS. IDC W/STR. REL. & BUMP POL. | 1 |

| REV | P.I.N. NO. | REVISION DESCRIPTION | BY | DF |
|---|---|---|---|---|
| B | 14309 | B1) ADDED ITEM #4, B2) ADDED NOTE #6 B3) ITEM 1 WAS –044 | PES 02 JUNE 1998 | JDN 02 JUNE 1998 |
| A | 14214 | ORIGINAL RELEASE | | |

SURFACE TREATMENT

HEAT TREATMENT

FIRST USED ON
MAX 4

EXCEPT AS NOTED:
ALL DIMENSIONS IN INCHES
TOLERANCE
DECIMAL
.0 ?.0300
.00 ?.0150
.000 ?.0050
.0000 ?.0005
ANGULAR ? 0?30'
BREAK ALL SHARP EDGES

THIRD ANGLE PROJECTION

HURCO MANUFACTURING COMPANY, INC.
INDIANAPOLIS, IN U.S.A.

DESCRIPTION
HARNESS, TRACKBALL

| DRAWN | DATE | CHECKED | DATE | APPROVED | DATE |
|---|---|---|---|---|---|
| PES | 3/6/98 | JDN | 3/6/98 | FWG | 3/9/98 |

| SCALE | SIZE | DRAWING | SHT. | REV. |
|---|---|---|---|---|
| NONE | C | 423–4401–175 | 1 OF 1 | B |

UNIT OF MEAS
PC

CN
8601

| SIZE | DRAWING | SHT. | REV. | PROPRIETARY INFORMATION |
|---|---|---|---|---|
| B | 423-4401-176 | 1 OF 1 | B | INFORMATION CONTAINED HEREIN IS THE PROPERTY OF HURCO MANUFACTURING COMPANY, INC. NO REPRODUCTION OR DISCLOSURE OF THIS INFORMATION SHALL BE MADE BY THE RECIPIENT TO ANY OTHER PERSON OR ORGANIZATION WITHOUT THE PRIOR WRITTEN CONSENT OF HURCO MANUFACTURING COMPANY, INC. |

## SCHEMATIC

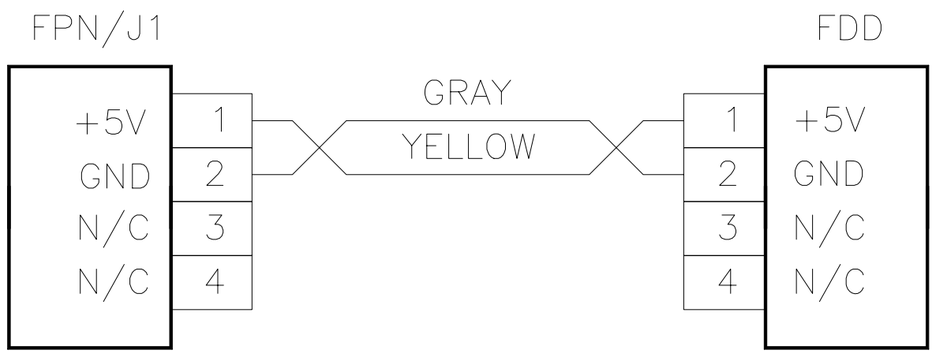


## ILLUSTRATION

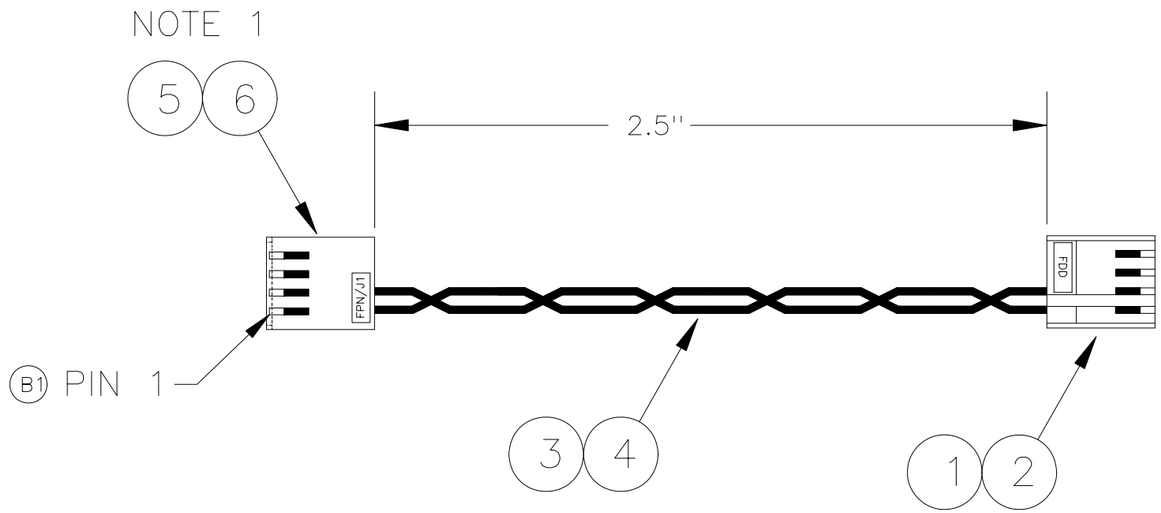


NOTE 1

NOTES:

1. LABEL ALL CONNECTORS AS SHOWN.
2. LABEL HARNESS WITH HURCO PART NUMBER AND REVISION.
3. WIRE LENGTHS SHOWN ARE ±0.25 IN. TOLERANCE.
4. TWIST WIRES.

PARTS LIST

| QTY. | PART NUMBER | ITEM DESCRIPTION | ITEM |
|---|---|---|---|
| 2 | 406-0801-148 | CONTACT, FEMALE CRIMP | 6 |
| 1 | 406-0801-153 | HOUSING, FEMALE 4 POS. IN-LINE | 5 |
| 3'' | 406-2006-024 | WIRE, 22 AWG 300V YELLOW | 4 |
| 3'' | 406-2006-028 | WIRE, 22 AWG 300V GRAY | 3 |
| B3 2 | 406-0803-829 | CONTACT, FEMALE CRIMP | 2 |
| B2 1 | 406-0803-828 | HOUSING, FEMALE 4 POS. IN-LINE | 1 |

| REV | ECN NO. | REVISION DESCRIPTION | REV BY | DATE | CHK BY | DATE | APPD BY | DATE | DF |
|---|---|---|---|---|---|---|---|---|---|
| B | 14309 | B1) PIN 1 LABELED; B2) ITEM 1 WAS QTY. 2; B3) ITEM 2 WAS QTY. 4; B4) CORRECTED DESCRIPTION | JCR | 06/98 | JDN | 06/98 | | | |
| A | 14214 | RELEASE | | | | | | | |

CN 8602

SURFACE TREATMENT

HEAT TREATMENT

FIRST USED ON MAX 4

EXCEPT AS NOTED: ALL DIMENSIONS IN INCHES TOLERANCE
DECIMAL
.0 ±.0300
.00 ±.0150
.000 ±.0050
.0000 ±.0005
ANGULAR ± 0°30'
BREAK ALL SHARP EDGES

THIRD ANGLE PROJECTION

HURCO MANUFACTURING COMPANY, INC.
INDIANAPOLIS, IN U.S.A.

DESCRIPTION: HARNESS, FDD POWER

| DRAWN | DATE | CHECKED | DATE | APPROVED | DATE |
|---|---|---|---|---|---|
| PES | 3/6/98 | JDN | 3/6/98 | FWG | 3/9/98 |

| SCALE | SIZE | DRAWING | SHT. | REV. |
|---|---|---|---|---|
| NONE | B | 423-4401-176 | 1 OF 1 | B |

UNIT OF MEAS. PC

| SIZE | DRAWING | SHT. | REV. |
|---|---|---|---|
| C | 423-4401-177 | 1 OF 1 | B |

PROPRIETARY INFORMATION

INFORMATION CONTAINED HEREIN IS THE PROPERTY OF HURCO MANUFACTURING COMPANY, INC. NO REPRODUCTION OR DISCLOSURE OF THIS INFORMATION SHALL BE MADE BY THE RECIPIENT TO ANY OTHER PERSON OR ORGANIZATION WITHOUT THE PRIOR WRITTEN CONSENT OF HURCO MANUFACTURING COMPANY, INC.

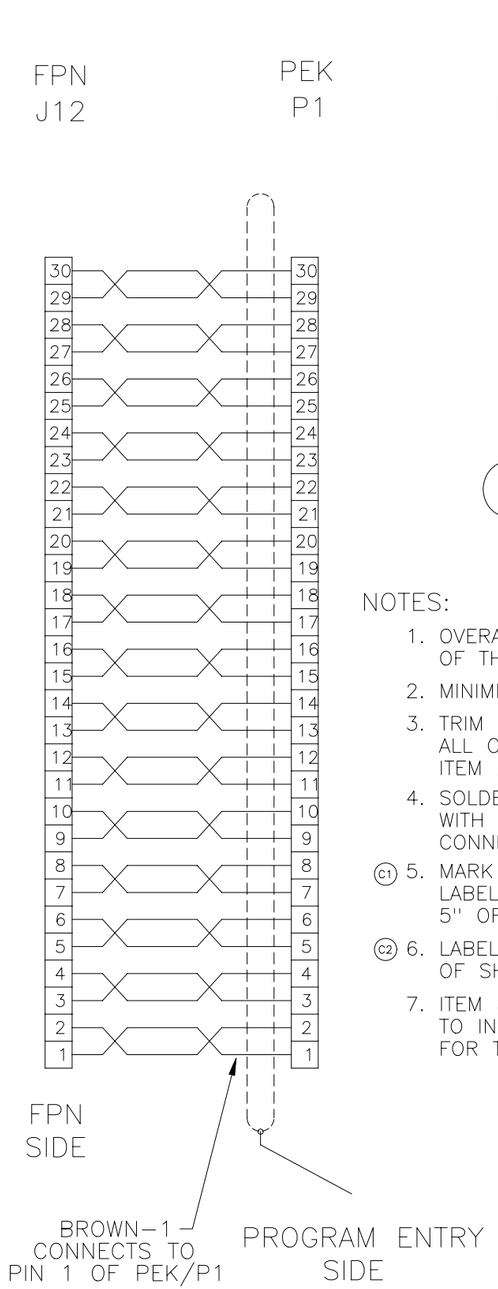


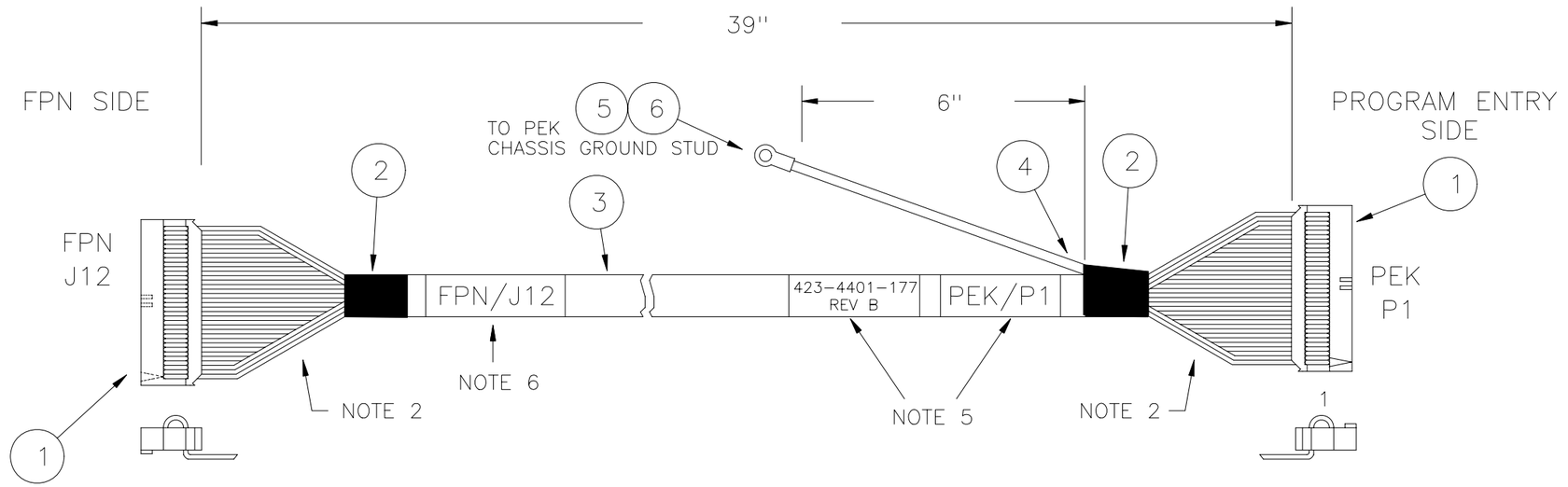


NOTES:

1. OVERALL DIMENSIONS ARE THE STRAIGHT LINE LENGTH OF THE HARNESS; TOLERANCE OF PLUS OR MINUS 1''.
2. MINIMIZE STRIP LENGTH.
3. TRIM FOUR EXTRA WIRES BACK UNTIL FLUSH WITH SHEATH. ALL CUT WIRES MUST BE COVERED WITH SHRINK TUBE, ITEM 2.
4. SOLDER GREEN/YELLOW WIRE, ITEM 5, TO SHIELD AND COVER WITH SHRINK TUBE, ITEM 3. THE SHIELD IS NOT CONNECTED AT THE FPN SIDE.
- (C1) 5. MARK PART NUMBER AND REVISION LETTER ON HARNESS. LABEL CABLE END AS SHOWN. PLACE BOTH LABELS WITHIN 5'' OF SHRINK TUBE (ITEM 2) AS SHOWN.
- (C2) 6. LABEL CABLE END AS SHOWN. PLACE LABEL WITHIN 1'' OF SHRINK TUBE (ITEM 2) AS SHOWN.
7. ITEM 3 IS STAMPED WITH HASH MARKS ON THE EXTERIOR TO INDICATE WHERE THE INTERIOR RIBBON FLATTENS OUT FOR TERMINATION. THESE MARKS OCCUR EVERY 20''.

| QTY. | PART NUMBER | ITEM DESCRIPTION | ITEM |
|---|---|---|---|
| 1 | 406-7001-006 | RING TONGUE, #6 18/22 AWG, RED | 6 |
| 7'' | 406-2005-030 | WIRE, 18 GA GREEN/YELLOW | 5 |
| 1'' | 406-6481-003 | SHRINK TUBE, 3/16'' | 4 |
| 40'' | 406-1602-001 | RIBBON, ROUND TWISTED 17 PAIR SHIELDED | 3 |
| 4'' | 406-6481-006 | SHRINK TUBE, 1/2'' | 2 |
| 2 | 406-0802-085 | CONNECTOR, 30 POS. SOCKET W/STRAIN RELIEF | 1 |

PARTS LIST

| REV | E.C.N. NO. | REVISION DESCRIPTION | REV BY | DATE | CHK BY | DATE | APPD BY | DATE | DF |
|---|---|---|---|---|---|---|---|---|---|
| B | 14309 | C1: NOTE 5 CHANGED TO INDICATE LABEL PLACEMENT; C2: NOTE 6 CHANGED TO INDICATE LABEL PLACEMENT. | JCR | 12 JUN 98 | JDN | 12 JUN 98 | | | |
| A | 14214 | ORIGINAL RELEASE | | | | | | | |

CN 8603

SURFACE TREATMENT

HEAT TREATMENT

FIRST USED ON: MAX4

EXCEPT AS NOTED: ALL DIMENSIONS IN INCHES
TOLERANCE
DECIMAL
.0 ±0.0300
.00 ±0.0150
.000 ±0.0050
.0000 ±0.0005
ANGULAR ± 0°30'
BREAK ALL SHARP EDGES

THIRD ANGLE PROJECTION

HURCO MANUFACTURING COMPANY, INC.
INDIANAPOLIS, IN U.S.A.

DESCRIPTION: HARNESS, PROGRAM ENTRY KEYBOARD

| DRAWN | DATE | CHECKED | DATE | APPROVED | DATE |
|---|---|---|---|---|---|
| PES | 3/6/98 | JDN | 3/6/98 | FWG | 3/10/98 |

| SCALE | SIZE | DRAWING | SHT. | REV. |
|---|---|---|---|---|
| NONE | C | 423-4401-177 | 1 OF 1 | B |

UNIT OF MEAS: PC

| SIZE | DRAWING | SHT. | REV. |
|---|---|---|---|
| B | 423-4401-178 | 1 OF 1 | D |

PROPRIETARY INFORMATION

INFORMATION CONTAINED HEREIN IS THE PROPERTY OF HURCO MANUFACTURING COMPANY, INC. NO REPRODUCTION OR DISCLOSURE OF THIS INFORMATION SHALL BE MADE BY THE RECIPIENT TO ANY OTHER PERSON OR ORGANIZATION WITHOUT THE PRIOR WRITTEN CONSENT OF HURCO MANUFACTURING COMPANY, INC.

## SCHEMATIC

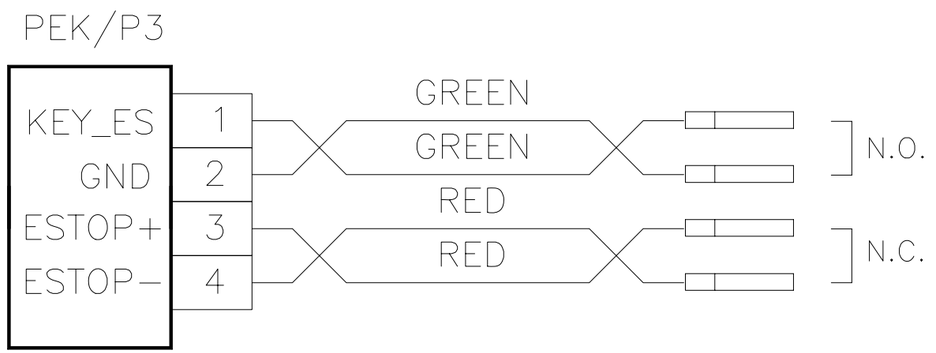


## ILLUSTRATION

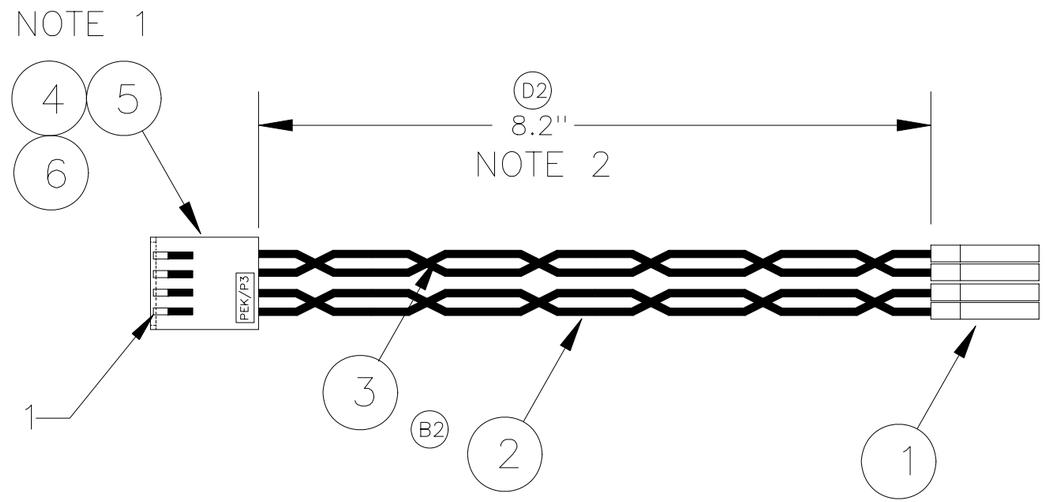


NOTES:

1. LABEL CONNECTOR AS SHOWN.
2. LABEL HARNESS WITH HURCO PART NUMBER AND REVISION.
3. WIRE LENGTHS SHOWN ARE ±0.25 IN. TOLERANCE.
4. TWIST WIRES.

| | REF | QTY. | PART NUMBER | ITEM DESCRIPTION | ITEM |
|---|---|---|---|---|---|
| | | | PARTS LIST | | |
| | 6 | | −− | LABEL | |
| C B5 | 5 | 4 | 406-0801-207 | TERMINAL, CRIMP 22-30 AWG | |
| | 4 | 1 | 406-0801-153 | HOUSING, FEMALE 4 POS. IN-LINE | |
| D1 B4 | 3 | 18.5" | 406-2006-022 | WIRE, 22 AWG 300V RED | |
| D1 B3 | 2 | 18.5" | 406-2006-025 | WIRE, 22 AWG 300V GREEN | |
| | 1 | 4 | 406-7001-086 | TERMINAL, FASTON: 0.110" STUD | |

| REV | ECN NO. | REVISION DESCRIPTION | REV BY | DATE | CHK BY | DATE | APPD BY | DATE | DF |
|---|---|---|---|---|---|---|---|---|---|
| D | 15443 | D1)ITEMS 2 AND 3 WERE QTY 16" D2) WAS 7.0" | WRS | 07/02 | FWG | 07/02 | JLW | 08/02 | |
| C | 14577 | C ) ITEM #5 WAS 406-0801-148; | PES | 04/99 | JDN | 04/99 | FWG | 04/99 | |
| B | 14309 | B1)PIN 1 LABELED; B2)CORRECTED LABELING OF ITEMS 2 & 3; B3) ITEM 2 WAS QTY. 8"; B4)ITEM 3 WAS QTY. 8"; B5)ITEM 5 WAS QTY. 2. | JCR | 06/98 | JDN | 06/98 | FWG | 07/98 | |
| A | 14214 | RELEASE | | | | | | | |

SURFACE TREATMENT

HEAT TREATMENT

FIRST USED ON: MAX 4

EXCEPT AS NOTED: ALL DIMENSIONS IN INCHES TOLERANCE

| DECIMAL | |
|---|---|
| .0 | ±.0300 |
| .00 | ±.0150 |
| .000 | ±.0050 |
| .0000 | ±.0005 |

ANGULAR ± 0°30'

BREAK ALL SHARP EDGES

THIRD ANGLE PROJECTION

HURCO MANUFACTURING COMPANY, INC.
INDIANAPOLIS, IN U.S.A.

DESCRIPTION: HARNESS, E-STOP, CONSOLE

| DRAWN | DATE | CHECKED | DATE | APPROVED | DATE |
|---|---|---|---|---|---|
| PES | 3/6/98 | JDN | 3/6/98 | FWG | 3/11/98 |

| SCALE | SIZE | DRAWING | SHT. | REV. |
|---|---|---|---|---|
| NONE | B | 423-4401-178 | 1 OF 1 | D |

UNIT OF MEAS.: PC

| SIZE | DRAWING | SHT. | REV. |
|---|---|---|---|
| B | 423-4401-179 | 1 OF 1 | C |

PROPRIETARY INFORMATION
INFORMATION CONTAINED HEREIN IS THE PROPERTY OF HURCO MANUFACTURING COMPANY, INC. NO REPRODUCTION OR DISCLOSURE OF THIS INFORMATION SHALL BE MADE BY THE RECIPIENT TO ANY OTHER PERSON OR ORGANIZATION WITHOUT THE PRIOR WRITTEN CONSENT OF HURCO MANUFACTURING COMPANY, INC.

## SCHEMATIC

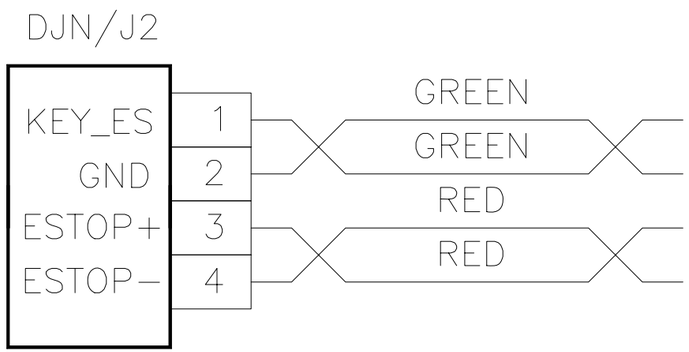


## ILLUSTRATION

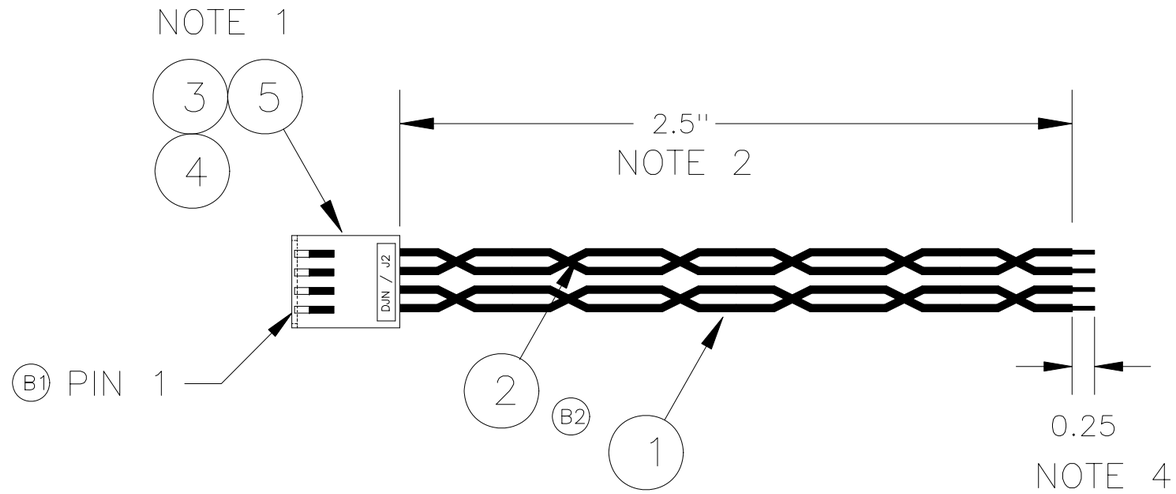


NOTES:

1. LABEL CONNECTOR AS SHOWN.
2. LABEL HARNESS WITH HURCO PART NUMBER AND REVISION.
3. WIRE LENGTHS SHOWN ARE ±0.25 IN. TOLERANCE.
4. TWIST WIRES.
5. STRIP INSULATION AND TIN LEADS AS SHOWN.

| | QTY. | PART NUMBER | ITEM DESCRIPTION | ITEM |
|---|---|---|---|---|
| | | | | 6 |
| | REF | -- | LABEL | 5 |
| C | 4 | 406-0801-207 | TERMINAL, CRIMP 22-30 AWG | 4 |
| | 1 | 406-0801-153 | HOUSING, FEMALE 4 POS. IN-LINE | 3 |
| B4 | 6" | 406-2006-022 | WIRE, 22 AWG 300V RED | 2 |
| B3 | 6" | 406-2006-025 | WIRE, 22 AWG 300V GREEN | 1 |

PARTS LIST

| REV | ECN NO. | REVISION DESCRIPTION | REV BY | DATE | CHK BY | DATE | APPD BY | DATE | DF |
|---|---|---|---|---|---|---|---|---|---|
| C | 14577 | C) ITEM #4 WAS 406-0801-148; | PES | 04/99 | JDN | 04/99 | | | |
| B | 14309 | B1)PIN 1 LABELED; B2)CORRECTED LABELING OF ITEMS 1 & 2; B3) ITEM 1 WAS QTY. 3"; B4) ITEM 2 WAS QTY. 3". | JCR | 06/98 | JDN | 06/98 | FWG | 07/98 | |
| A | 14214 | RELEASE | | | | | | | |

SURFACE TREATMENT

HEAT TREATMENT

FIRST USED ON
MAX 4

EXCEPT AS NOTED:
ALL DIMENSIONS IN INCHES
TOLERANCE
DECIMAL
.0 ±.0300
.00 ±.0150
.000 ±.0050
.0000 ±.0005
ANGULAR ± 0°30'
BREAK ALL SHARP EDGES

THIRD ANGLE PROJECTION

HURCO MANUFACTURING COMPANY, INC.
INDIANAPOLIS, IN U.S.A.

DESCRIPTION
HARNESS, E-STOP 2"

| DRAWN | DATE | CHECKED | DATE | APPROVED | DATE |
|---|---|---|---|---|---|
| PES | 3/6/98 | JDN | 3/6/98 | FWG | 3/10/98 |

| SCALE | SIZE | DRAWING | SHT. | REV. |
|---|---|---|---|---|
| NONE | B | 423-4401-179 | 1 OF 1 | C |

UNIT OF MEAS.
PC

CN
8605

| SIZE | DRAWING | SHT. | REV. |
|---|---|---|---|
| C | 423-4401-180 -293 | 1 OF 2 | G |

PROPRIETARY INFORMATION

INFORMATION CONTAINED HEREIN IS THE PROPERTY OF HURCO MANUFACTURING COMPANY, INC. NO REPRODUCTION OR DISCLOSURE OF THIS INFORMATION SHALL BE MADE BY THE RECIPIENT TO ANY OTHER PERSON OR ORGANIZATION WITHOUT THE PRIOR WRITTEN CONSENT OF HURCO MANUFACTURING COMPANY, INC.

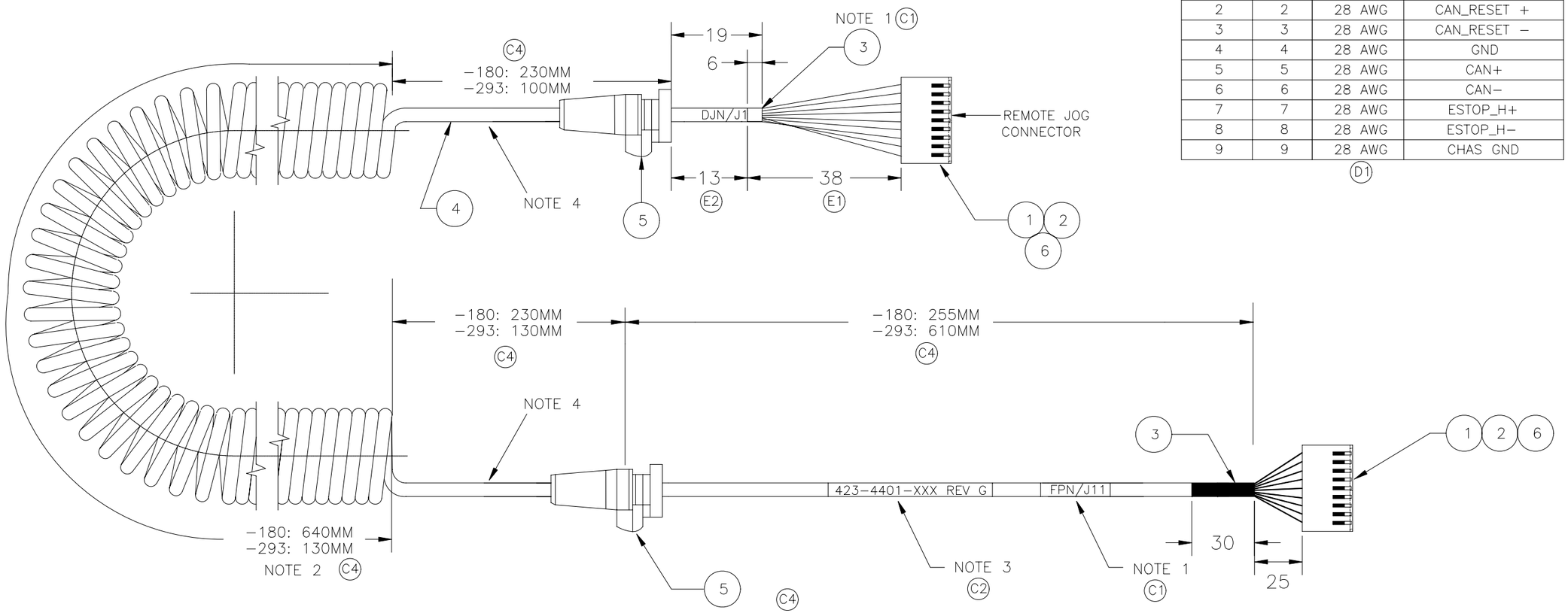


| PIN NO. DJN J1 | PIN NO. FPN J11 | WIRE GAUGE | FUNCTION |
|---|---|---|---|
| 1 | 1 | 28 AWG | +12 VDC |
| 2 | 2 | 28 AWG | CAN_RESET + |
| 3 | 3 | 28 AWG | CAN_RESET − |
| 4 | 4 | 28 AWG | GND |
| 5 | 5 | 28 AWG | CAN+ |
| 6 | 6 | 28 AWG | CAN− |
| 7 | 7 | 28 AWG | ESTOP_H+ |
| 8 | 8 | 28 AWG | ESTOP_H− |
| 9 | 9 | 28 AWG | CHAS GND |

D1

| DESCRIPTION TABLE | |
|---|---|
| PART NUMBER | DESCRIPTION |
| 423-4401-180 | HARNESS, MAX4 REMOTE JOG |
| 423-4401-293 | HARNESS, MAX4 DEMO CONSOLE RJ |

| QTY. | PART NUMBER | ITEM DESCRIPTION | ITEM |
|---|---|---|---|
| | | PARTS LIST | |
| 2 | REF. | LABEL | 6 |
| 2 | REF. | STRAIN RELIEF, MOLDED (SEE SHT. 2) | 5 |
| 1 | 406-1601-011 | CABLE, COILED CORD, 9 CONDUCTOR | 4 |
| E3 2'' | 406-6481-005 | SHRINK TUBE, 3/8'' | 3 |
| D2 B 18 | 406-0801-207 | TERMINAL, CRIMP, 22-30 AWG. (0.38 MICRON GOLD) | 2 |
| 2 | 406-0801-199 | HOUSING, 9 PIN, W/RAMP,POLARIZING | 1 |

| REV | ECN NO. | REVISION DESCRIPTION | REV BY | DATE | CHK BY | DATE | APPD BY | DATE | DF |
|---|---|---|---|---|---|---|---|---|---|
| G | 15593 | SHT 2: 1) WAS 90P DUROMETER. 2) WAS 40 STRAND. 3) WAS 100,000 CYCLES. | FWG | 29 APR 2003 | WRS | 29 APR 2003 | FWG | 29 APR 2003 | |
| F | 15554 | 1) REDESIGNED STRAIN RELIEF RIB PATTERN, 2) ADDED MATERIAL SPECS AND TEST CRITERIA (SHT. 2) 3) DIMENSIONS WERE ENGLISH. | FWG | 30 JAN 2003 | WRS | 30 JAN 2003 | FWG | 30 JAN 2003 | |
| E | 15463 | E1) WAS 1'' E2) WAS 2''. E3) WAS QTY 2.5'' | FWG | 20 MAY 02 | WRS | 20 MAY 02 | FWG | 20 MAY 02 | |
| D | 14577 | D1) REMOVED WIRE COLOR TABLE; D2) ITEM #2 WAS 406-0801-148; | PES | 27 APR 99 | JDN | 27 APR 99 | FWG | 27 APR 99 | |
| C | 14344 | C1: CHANGED LABEL LOCATIONS AND NOTE 1; C2: ADDED NEW LABEL AND NOTE 3; C3: ADDED NOTE 4.; C4: ADDED -293; C5: ADDED SHEET 2. | JCR | 16 JUL 98 | JDN | 16 JUL 98 | FWG | 16 JUL 98 | |
| B | 14234 | CHANGED ITEM #2 PART NUMBER | PES | 19 MAR 98 | JDN | 19 MAR 98 | FWG | 19 MAR 98 | |
| A | 14187 | ORIGINAL ISSUE | | | | | | | |

SURFACE TREATMENT

HEAT TREATMENT

FIRST USED ON: MAX4

EXCEPT AS NOTED: ALL CORNERS MUST BE AS FOLLOWS
INSIDE: 1.3 X 45° OR 1.3 R MAX
OUTSIDE: 0.8 X 45° OR 1.3 R

EXCEPT AS NOTED: WELDING TOLERANCE MUST BE AS FOLLOWS ±3

EXCEPT AS NOTED: ALL DIMENSIONS IN METRIC TOLERANCE

| DECIMAL | |
|---|---|
| .0 | ±0.8 |
| .00 | ±0.4 |
| .000 | ±0.13 |
| .0000 | ±0.013 |
| ANGULAR | ± 0°30' |

THIRD ANGLE PROJECTION

HURCO MANUFACTURING COMPANY, INC.
INDIANAPOLIS, IN U.S.A.

DESCRIPTION: SEE DESCRIPTION TABLE

| DRAWN | DATE | CHECKED | DATE | APPROVED | DATE |
|---|---|---|---|---|---|
| P.E.S. | 19MAR98 | J.D.N. | 19MAR98 | FWG | 19MAR98 |

| SCALE | SIZE | DRAWING | SHT. | REV. |
|---|---|---|---|---|
| NONE | C | 423-4401-180 -293 | 1 OF 2 | G |

UNIT OF MEAS: EA

| SIZE | DRAWING | SHT. | REV. |
|---|---|---|---|
| C | 423-4401-180 / -293 | 2 OF 2 | G |

PROPRIETARY INFORMATION
INFORMATION CONTAINED HEREIN IS THE PROPERTY OF HURCO MANUFACTURING COMPANY, INC. NO REPRODUCTION OR DISCLOSURE OF THIS INFORMATION SHALL BE MADE BY THE RECIPIENT TO ANY OTHER PERSON OR ORGANIZATION WITHOUT THE PRIOR WRITTEN CONSENT OF HURCO MANUFACTURING COMPANY, INC.

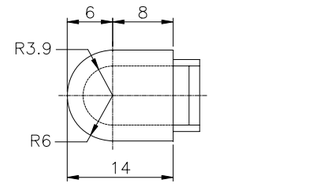


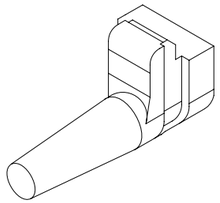

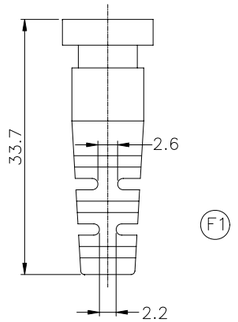


F1

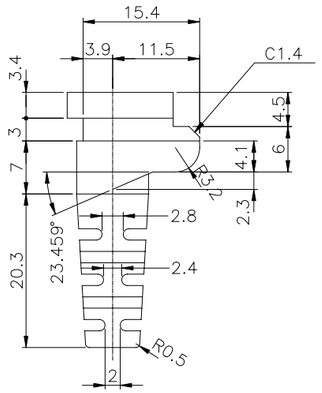


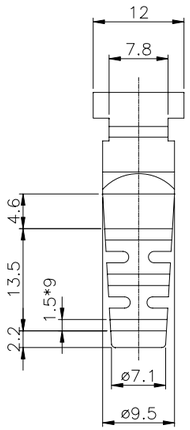


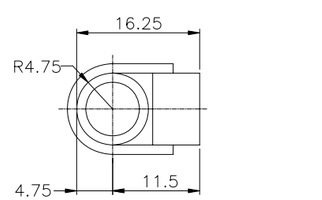


NOTES:

1. LABEL CONNECTORS BETWEEN MOLDED STRAIN RELIEF (ITEM 5) AND HOUSING (ITEM 1) AS SHOWN (2 PLACES).
2. COIL LENGTH (640MM FOR −180, 130MM FOR −293) IS MEASURED STRAIGHT LINE ON A FLAT SURFACE WITH ALL COILS COMPLETELY COLLAPSED.
3. MARK PART NUMBER AND REVISION LEVEL (REF. DESCRIPTION TABLE) ON HARNESS BETWEEN MOLDED STRAIN RELIEF (ITEM 5) AND HOUSING (ITEM 1) AS SHOWN.
4. DO NOT PLACE LABELS IN THESE LOCATIONS.
5. MATERIAL SPECIFICATIONS:
   - A. STRAIN RELIEF: FLEXIBLE PVC, 60P DUROMETER
   - B. JACKET: FLEXIBLE PVC, 30P DUROMETER
   - C. CONDUCTORS: 62 STRAND COPPER
   - D. INSULATION: POLYPROPYLENE (PP)
   - E. SHIELD: MYLAR FOIL
   - F. REINFORCEMENT: COTTON THREAD
   - G. CONTACT PLATING: 0.38 MICRON GOLD
6. CABLE DESIGN MUST PASS THE FOLLOWING BENDING CYCLE TEST CRITERIA:
   - A. PROCEDURE: CLAMP STRAIN RELIEF IN BENDING FIXTURE. ATTACH WEIGHT TO COILS SUCH THAT THE WEIGHT HANGS FREELY. COUNT BENDING CYCLES UNTIL ANY CIRCUIT OPENS.
   - B. WEIGHT: 500 GRAMS
   - C. DISPLACEMENT: 180 DEGREES (+/−90)
   - D. FREQUENCY: 30 CYCLES / MIN
   - E. BENDING RADIUS: 25MM
   - F. SAMPLE RATE: 2 UNITS TO BE TESTED PRIOR TO SHIPMENT OF EACH ORDER.
   - G. MINIMUM LIFE: 250,000 CYCLES BASED ON 2 SAMPLE AVERAGE.

F2 G1 G2 G3

| | | | |
|---|---|---|---|
| SURFACE TREATMENT | EXCEPT AS NOTED: ALL CORNERS MUST BE AS FOLLOWS INSIDE: 1.3 X 45° OR 1.3 R MAX OUTSIDE: 0.8 X 45° OR 1.3 R | EXCEPT AS NOTED: ALL DIMENSIONS IN METRIC TOLERANCE DECIMAL .0 ±0.8, .00 ±0.4, .000 ±0.13, .0000 ±0.013, ANGULAR ± 0°30' | HURCO MANUFACTURING COMPANY, INC. INDIANAPOLIS, IN U.S.A. |
| HEAT TREATMENT | | | DESCRIPTION: SEE DESCRIPTION TABLE |
| FIRST USED ON: MAX4 | EXCEPT AS NOTED: WELDING TOLERANCE MUST BE AS FOLLOWS ±3 | THIRD ANGLE PROJECTION | SCALE: NONE; UNIT OF MEAS: EA; SIZE: C; DRAWING: 423-4401-180 / -293; SHT.: 2 OF 2; REV.: G |

| DRAWN | DATE | CHECKED | DATE | APPROVED | DATE |
|---|---|---|---|---|---|
| JCR | 07/15/98 | J.D.N. | 07/16/98 | | |

| SIZE | DRAWING | SHT. | REV. | PROPRIETARY INFORMATION |
|---|---|---|---|---|
| C | 423-4401-186 | 1 OF 1 | A | INFORMATION CONTAINED HEREIN IS THE PROPERTY OF HURCO MANUFACTURING COMPANY, INC. NO REPRODUCTION OR DISCLOSURE OF THIS INFORMATION SHALL BE MADE BY THE RECIPIENT TO ANY OTHER PERSON OR ORGANIZATION WITHOUT THE PRIOR WRITTEN CONSENT OF HURCO MANUFACTURING COMPANY, INC. |

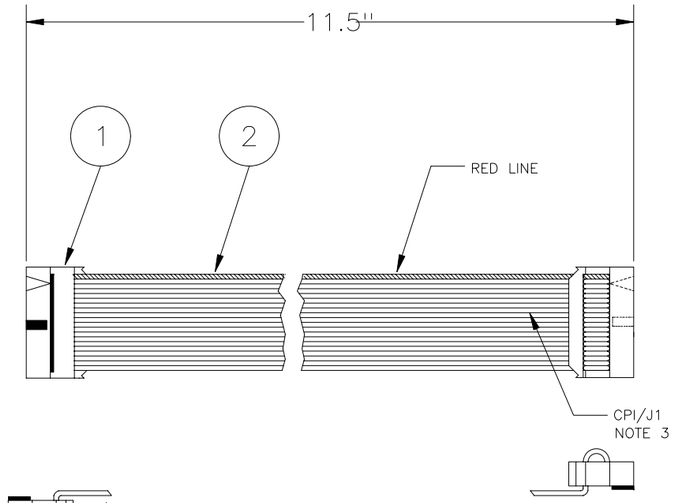


NOTES:
1. OVERALL DIMENSION IS STRAIGHT LINE LENGTH OF HARNESS, 11.5'', TOLERANCE OF ±1/4''.
2. LABEL HARNESS WITH HURCO PART NUMBER AND REVISION.
3. LABEL CONNECTORS AS SHOWN.

| QTY. | PART NUMBER | ITEM DESCRIPTION | ITEM |
|---|---|---|---|
| | | PARTS LIST | |
| 12.5'' | 406-1560-012 | CABLE, RIBBON 20 CONDUCTOR | 2 |
| 2 | 406-0802-083 | SOCKET, 20 POS. IDC W/STRAIN RELIEF | 1 |

| REV | P.I.N. NO. | REVISION DESCRIPTION | REV BY | DATE | CHK BY | DATE | APPD BY | DATE | DF |
|---|---|---|---|---|---|---|---|---|---|
| A | 14214 | ORIGINAL RELEASE | | | | | | | |

CN 8657

SURFACE TREATMENT

HEAT TREATMENT

FIRST USED ON: MAX 4

EXCEPT AS NOTED: ALL DIMENSIONS IN INCHES
TOLERANCE
DECIMAL
.0 ?.0300
.00 ?.0150
.000 ?.0050
.0000 ?.0005
ANGULAR ? 0?30'
BREAK ALL SHARP EDGES

THIRD ANGLE PROJECTION

HURCO MANUFACTURING COMPANY, INC.
INDIANAPOLIS, IN U.S.A.

DESCRIPTION: HARNESS, CPI TO FPN

| DRAWN | DATE | CHECKED | DATE | APPROVED | DATE |
|---|---|---|---|---|---|
| PES | 3/6/98 | JDN | 3/6/98 | | |

| SCALE | SIZE | DRAWING | SHT. | REV. |
|---|---|---|---|---|
| NONE | C | 423-4401-186 | 1 OF 1 | A |

UNIT OF MEAS: PC

| SIZE | DRAWING | SHT. | REV. |
|---|---|---|---|
| C | 423-4401-240 | 1 OF 1 | A |

PROPRIETARY INFORMATION
INFORMATION CONTAINED HEREIN IS THE PROPERTY OF HURCO MANUFACTURING COMPANY, INC. NO REPRODUCTION OR DISCLOSURE OF THIS INFORMATION SHALL BE MADE BY THE RECIPIENT TO ANY OTHER PERSON OR ORGANIZATION WITHOUT THE PRIOR WRITTEN CONSENT OF HURCO MANUFACTURING COMPANY, INC.

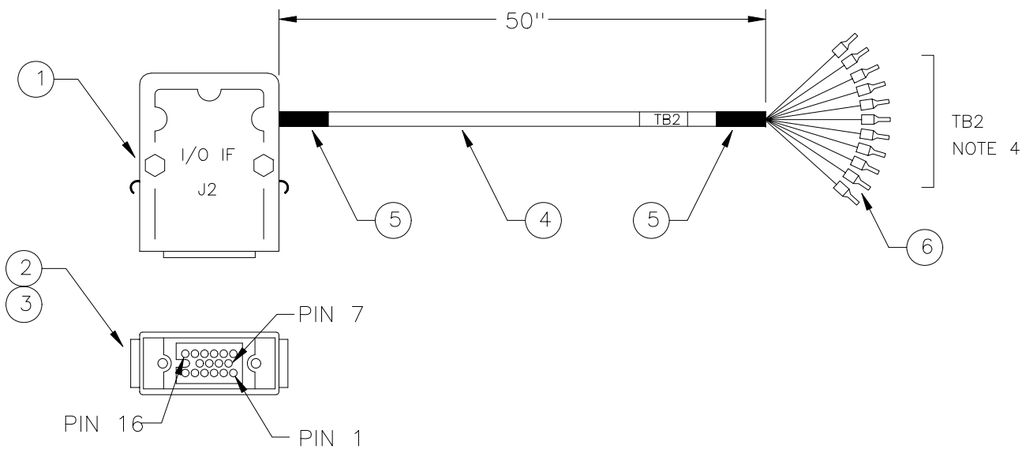


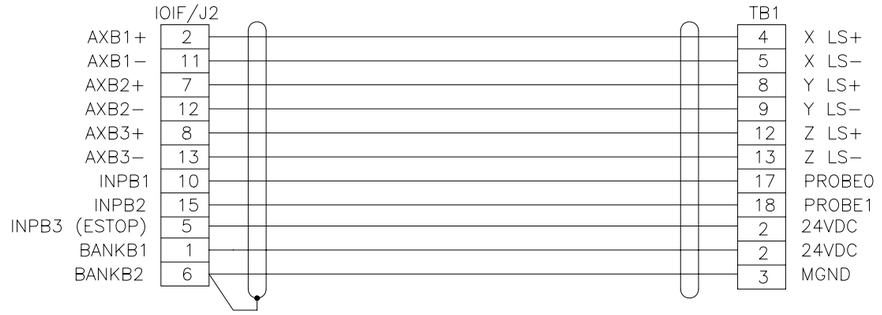


NOTES:
1. MARK HARNESS WITH HURCO PART NUMBER AND REVISION.
2. OVERALL DIMENSION IS STRAIGHT LINE LENGTH, +1''.
3. LABEL CONNECTOR AS SHOWN.
4. STRIP LENGTH IS 10''.

PARTS LIST

| QTY. | PART NUMBER | ITEM DESCRIPTION | ITEM |
|---|---|---|---|
| 11 | 406-0965-014 | FERRULE, 24AWG LT YELLOW | 6 |
| 4'' | 406-6481-005 | SHRINK TUBE, 3/8'' BLACK | 5 |
| 60'' | 406-1248-001 | CABLE, 15/COND, 24AWG SHLD | 4 |
| 13 | 406-0811-008 | CONTACT, MALE SILVER | 3 |
| 1 | 406-0811-019 | INSULATOR, 16-POS MALE | 2 |
| 1 | 406-0811-002 | CASE, VERTICAL/HORIZONTAL 16POS | 1 |

| REV | P.I.N. NO. | REVISION DESCRIPTION | REV BY | DATE | CHK BY | DATE | APPD BY | DATE | DF |
|---|---|---|---|---|---|---|---|---|---|
| A | 14209 | RELEASE | | | | | | | |

CN 8735

SURFACE TREATMENT

HEAT TREATMENT

FIRST USED ON
BMC6434

EXCEPT AS NOTED:
ALL CORNERS MUST BE AS FOLLOWS
INSIDE:
.050'' X 45° OR .05'' R MAX
OUTSIDE:
.030'' X 45° OR .05'' R

EXCEPT AS NOTED:
WELDING TOLERANCE MUST BE AS FOLLOWS
±.12

EXCEPT AS NOTED:
ALL DIMENSIONS IN INCHES
TOLERANCE
DECIMAL
.0 ±.0300
.00 ±.0150
.000 ±.0050
.0000 ±.0005
ANGULAR ± 0°30'

THIRD ANGLE PROJECTION

HURCO MANUFACTURING COMPANY, INC.
INDIANAPOLIS, IN U.S.A.

DESCRIPTION
HARNESS, IOIF J2

| DRAWN | DATE | CHECKED | DATE | APPROVED | DATE |
|---|---|---|---|---|---|
| DEO | 28FEB98 | MJW | 3JUL98 | | |

| SCALE | SIZE | DRAWING | SHT. | REV. |
|---|---|---|---|---|
| NONE | C | 423-4401-240 | 1 OF 1 | A |

UNIT OF MEAS
EA

# Harness, FDD Signal, 650MM, 423-4401-721—Rev. A

| SIZE | DRAWING | SHT. | REV. |
|---|---|---|---|
| B | 423–4401–721 | 1 OF 1 | A |

PROPRIETARY INFORMATION

INFORMATION CONTAINED HEREIN IS THE PROPERTY OF HURCO MANUFACTURING COMPANY, INC. NO REPRODUCTION OR DISCLOSURE OF THIS INFORMATION SHALL BE MADE BY THE RECIPIENT TO ANY OTHER PERSON OR ORGANIZATION WITHOUT THE PRIOR WRITTEN CONSENT OF HURCO MANUFACTURING COMPANY, INC.

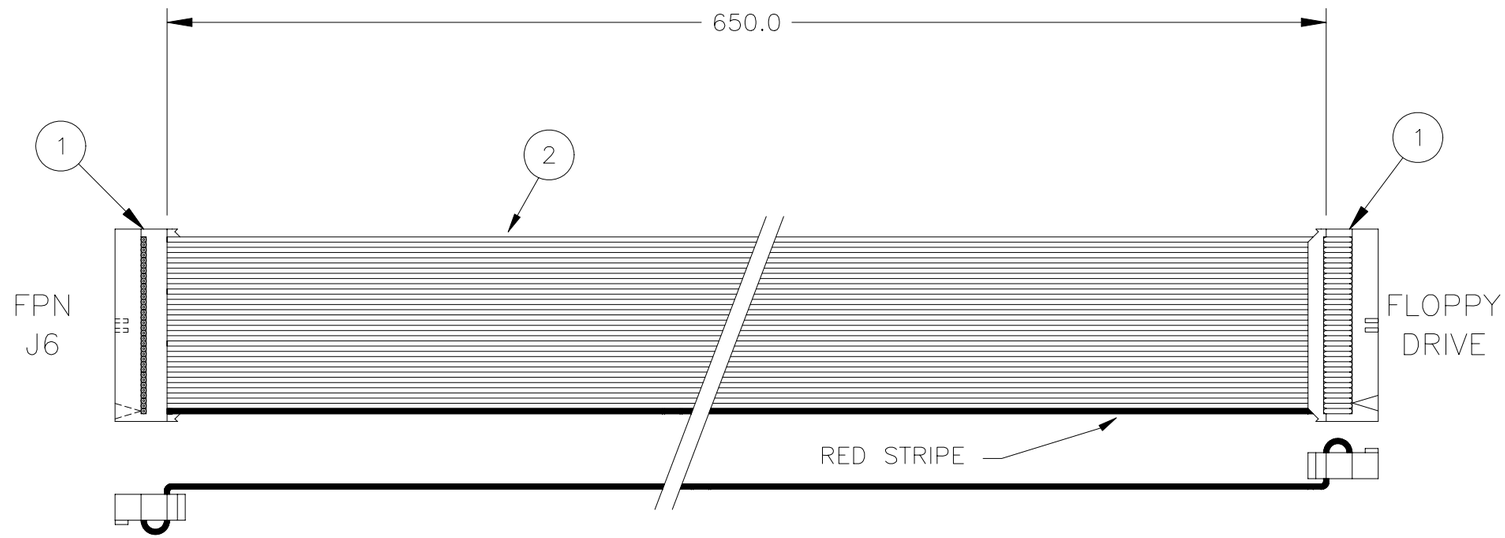


NOTES:

1. OVERALL DIMENSION IS STRAIGHT LINE LENGTH OF HARNESS, TOLERANCE OF ±10MM
2. LABEL HARNESS WITH HURCO PART NUMBER AND REVISION.
3. LABEL CONNECTORS AS SHOWN.
4. PLACE RED STRIPE AT PIN 1, BOTH ENDS.

PARTS LIST

| QTY. | PART NUMBER | ITEM DESCRIPTION | ITEM |
|---|---|---|---|
| 685MM | 406–1561–010 | RIBBON CABLE, 34 COND. | 2 |
| 2 | 406–0806–022 | CONNECTOR, FEMALE 34 PIN KEYED | 1 |

| REV | E.C.N. NO. | REVISION DESCRIPTION | REV BY | DATE | CHK BY | DATE | APPD BY | DATE | DF |
|---|---|---|---|---|---|---|---|---|---|
| A | 15443 | REL | | | | | | | |

SURFACE TREATMENT

HEAT TREATMENT

FIRST USED ON: MAX

EXCEPT AS NOTED: ALL CORNERS MUST BE AS FOLLOWS
INSIDE: 1.3 X 45° OR 1.3 R MAX
OUTSIDE: 0.8 X 45° OR 1.3 R

EXCEPT AS NOTED: WELDING TOLERANCE MUST BE AS FOLLOWS ±3

EXCEPT AS NOTED: ALL DIMENSIONS IN METRIC TOLERANCE
DECIMAL
.0 ±0.8
.00 ±0.4
.000 ±0.13
.0000 ±0.013
ANGULAR ± 0°30'

THIRD ANGLE PROJECTION

HURCO MANUFACTURING COMPANY, INC.
INDIANAPOLIS, IN U.S.A.

DESCRIPTION: HARNESS, FDD SIGNAL, 650MM

| DRAWN | DATE | CHECKED | DATE | APPROVED | DATE |
|---|---|---|---|---|---|
| WRS | 2/7/02 | FWG | 7/30/02 | | |

| SCALE | SIZE | DRAWING | SHT. | REV. |
|---|---|---|---|---|
| NONE | B | 423–4401–721 | 1 OF 1 | A |

UNIT OF MEAS.: EA.

| SIZE | DRAWING | SHT. | REV. | PROPRIETARY INFORMATION |
|---|---|---|---|---|
| B | 423-4401-722 | 1 OF 1 | A | INFORMATION CONTAINED HEREIN IS THE PROPERTY OF HURCO MANUFACTURING COMPANY, INC. NO REPRODUCTION OR DISCLOSURE OF THIS INFORMATION SHALL BE MADE BY THE RECIPIENT TO ANY OTHER PERSON OR ORGANIZATION WITHOUT THE PRIOR WRITTEN CONSENT OF HURCO MANUFACTURING COMPANY, INC. |

## SCHEMATIC

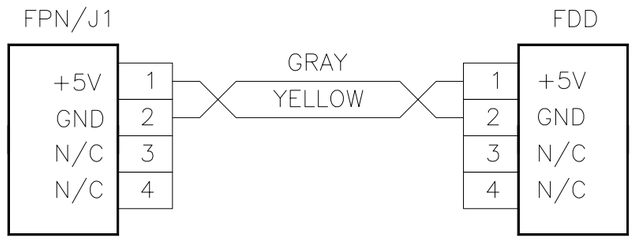


## ILLUSTRATION

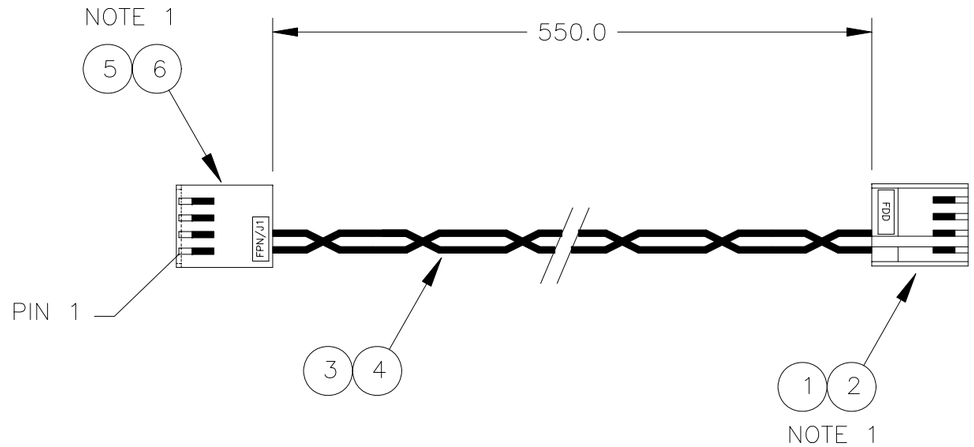


NOTES:
1. LABEL ALL CONNECTORS AS SHOWN.
2. LABEL HARNESS WITH HURCO PART NUMBER AND REVISION.
3. WIRE LENGTHS SHOWN ARE ±0.25 IN. TOLERANCE.
4. TWIST WIRES.

PARTS LIST

| QTY. | PART NUMBER | ITEM DESCRIPTION | ITEM |
|---|---|---|---|
| 2 | 406-0801-148 | TERMINAL, CRIMP 22-30 AWG | 6 |
| 1 | 406-0801-153 | HOUSING, 4 POS CRIMP TERM W/LOCKING RAMP | 5 |
| 565MM | 406-2006-024 | WIRE, 22 AWG 300V YELLOW | 4 |
| 565MM | 406-2006-028 | WIRE, 22 AWG 300V GRAY | 3 |
| 2 | 406-0803-829 | AMP PINS, 170204-1 | 2 |
| 1 | 406-0803-828 | AMP HOUSING 171822-4 | 1 |

| REV | E.C.N. NO. | REVISION DESCRIPTION | REV BY | DATE | CHK BY | DATE | APPD BY | DATE | DF |
|---|---|---|---|---|---|---|---|---|---|
| A | 15443 | REL | | | | | | | |

SURFACE TREATMENT ~

HEAT TREATMENT ~

FIRST USED ON MAX

EXCEPT AS NOTED: ALL CORNERS MUST BE AS FOLLOWS
INSIDE: 1.3 X 45° OR 1.3 R MAX
OUTSIDE: 0.8 X 45° OR 1.3 R

EXCEPT AS NOTED: WELDING TOLERANCE MUST BE AS FOLLOWS ±3

EXCEPT AS NOTED: ALL DIMENSIONS IN METRIC TOLERANCE
DECIMAL
.0 ±0.8
.00 ±0.4
.000 ±0.13
.0000 ±0.013
ANGULAR ± 0°30'

THIRD ANGLE PROJECTION

HURCO MANUFACTURING COMPANY, INC.
INDIANAPOLIS, IN U.S.A.

DESCRIPTION: HARNESS, FDD POWER, 550MM

| DRAWN | DATE | CHECKED | DATE | APPROVED | DATE |
|---|---|---|---|---|---|
| WRS | 2/8/01 | FWG | 7/30/02 | | |

| SCALE | SIZE | DRAWING | SHT. | REV. |
|---|---|---|---|---|
| NONE | B | 423-4401-722 | 1 OF 1 | A |

UNIT OF MEAS. EA.

| SIZE | DRAWING | SHT. | REV. |
|---|---|---|---|
| B | 423-4401-723 | 1 OF 1 | A |

PROPRIETARY INFORMATION

INFORMATION CONTAINED HEREIN IS THE PROPERTY OF HURCO MANUFACTURING COMPANY, INC. NO REPRODUCTION OR DISCLOSURE OF THIS INFORMATION SHALL BE MADE BY THE RECIPIENT TO ANY OTHER PERSON OR ORGANIZATION WITHOUT THE PRIOR WRITTEN CONSENT OF HURCO MANUFACTURING COMPANY, INC.

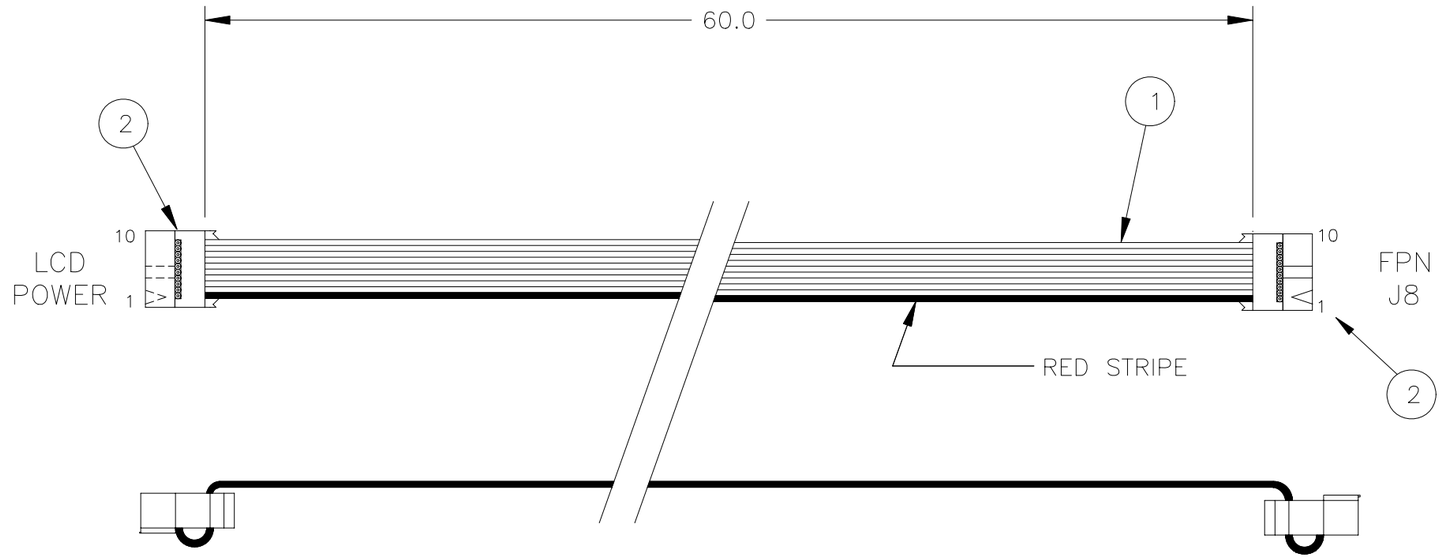


NOTES:

1. PLACE RED STRIPE AT PIN 1, BOTH ENDS.
2. LABEL HARNESS WITH HURCO PART NUMBER AND REVISION.
3. OVERALL DIMENSION IS STRAIGHT LINE
   LENGTH OF HARNESS, TOLERANCE OF ±10MM
4. LABEL CONNECTORS AS SHOWN.

PARTS LIST

| QTY. | PART NUMBER | ITEM DESCRIPTION | ITEM |
|---|---|---|---|
| 2 | 406-0806-017 | CONNECTOR, 10 PIN | 2 |
| 95mm | 406-1560-008 | CABLE, GRAY 10-COND RIBBON | 1 |

| REV | E.C.N. NO. | REVISION DESCRIPTION | REV BY | DATE | CHK BY | DATE | APPD BY | DATE | DF |
|---|---|---|---|---|---|---|---|---|---|
| A | 15443 | REL | | | | | | | |

SURFACE TREATMENT

HEAT TREATMENT

FIRST USED ON
MAX

EXCEPT AS NOTED: ALL CORNERS MUST BE AS FOLLOWS
INSIDE: 1.3 X 45° OR 1.3 R MAX
OUTSIDE: 0.8 X 45° OR 1.3 R

EXCEPT AS NOTED: WELDING TOLERANCE MUST BE AS FOLLOWS ±3

EXCEPT AS NOTED: ALL DIMENSIONS IN METRIC TOLERANCE
DECIMAL
.0 ±0.8
.00 ±0.4
.000 ±0.13
.0000 ±0.013
ANGULAR ± 0°30'

THIRD ANGLE PROJECTION

HURCO MANUFACTURING COMPANY, INC.
INDIANAPOLIS, IN U.S.A.

DESCRIPTION: HARNESS, FPD POWER, 60MM

| DRAWN | DATE | CHECKED | DATE | APPROVED | DATE |
|---|---|---|---|---|---|
| WRS | 2/7/02 | FWG | 7/30/02 | | |

| SCALE | SIZE | DRAWING | SHT. | REV. |
|---|---|---|---|---|
| NONE | B | 423-4401-723 | 1 OF 1 | A |

UNIT OF MEAS.: EA.

| SIZE | DRAWING | SHT. | REV. |
|---|---|---|---|
| B | 423-4401-724 | 1 OF 1 | A |

PROPRIETARY INFORMATION
INFORMATION CONTAINED HEREIN IS THE PROPERTY OF HURCO MANUFACTURING COMPANY, INC. NO REPRODUCTION OR DISCLOSURE OF THIS INFORMATION SHALL BE MADE BY THE RECIPIENT TO ANY OTHER PERSON OR ORGANIZATION WITHOUT THE PRIOR WRITTEN CONSENT OF HURCO MANUFACTURING COMPANY, INC.

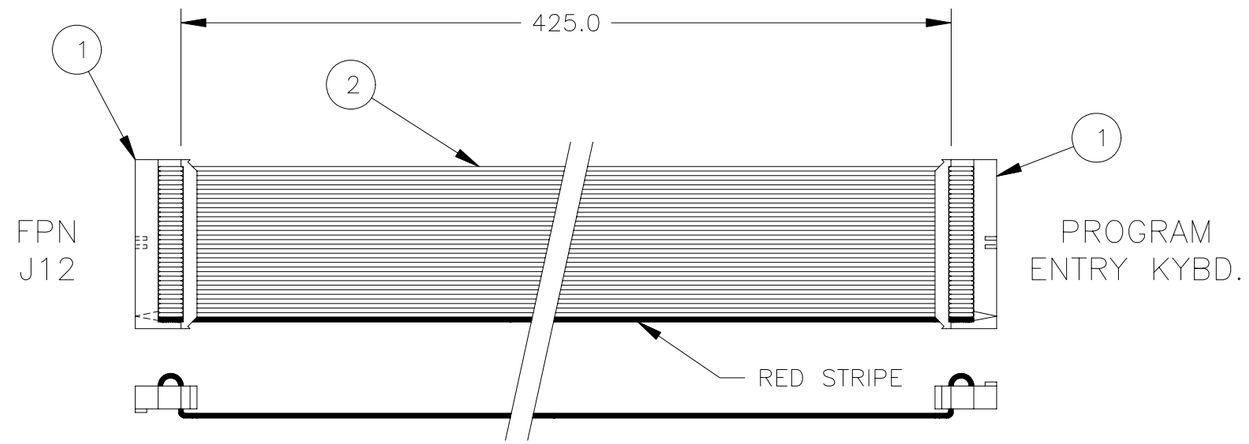


NOTES:
1. PLACE RED STRIPE AT PIN 1, BOTH ENDS.
2. LABEL HARNESS WITH HURCO PART NUMBER AND REVISION.
3. OVERALL DIMENSION IS STRAIGHT LINE
   LENGTH OF HARNESS, TOLERANCE OF ±10MM
4. LABEL CONNECTORS AS SHOWN.

PARTS LIST

| QTY. | PART NUMBER | ITEM DESCRIPTION | ITEM |
|---|---|---|---|
| 460MM | 406-1560-022 | CABLE, GRAY FLAT RIBBON 30 CONUDUCTOR | 2 |
| 2 | 406-0802-085 | CONNECTOR, 30 POS. SOCKET W/STRAIN RELIEF | 1 |

| REV | E.C.N. NO. | REVISION DESCRIPTION | REV BY | DATE | CHK BY | DATE | APPD BY | DATE | DF |
|---|---|---|---|---|---|---|---|---|---|
| A | 15443 | REL | | | | | | | |

SURFACE TREATMENT

HEAT TREATMENT

FIRST USED ON
MAX

EXCEPT AS NOTED:
ALL CORNERS MUST BE AS FOLLOWS
INSIDE:
1.3 X 45° OR 1.3 R MAX
OUTSIDE:
0.8 X 45° OR 1.3 R

EXCEPT AS NOTED:
WELDING TOLERANCE MUST BE AS FOLLOWS
±3

EXCEPT AS NOTED:
ALL DIMENSIONS IN METRIC TOLERANCE

| DECIMAL | |
|---|---|
| .0 | ±0.8 |
| .00 | ±0.4 |
| .000 | ±0.13 |
| .0000 | ±0.013 |
| ANGULAR | ± 0°30' |

THIRD ANGLE PROJECTION

HURCO MANUFACTURING COMPANY, INC.
INDIANAPOLIS, IN U.S.A.

DESCRIPTION
HARNESS, PROGRAM ENTRY, 425MM

| DRAWN | DATE | CHECKED | DATE | APPROVED | DATE |
|---|---|---|---|---|---|
| WRS | 2/8/02 | FWG | 7/30/02 | | |

| SCALE | SIZE | DRAWING | SHT. | REV. |
|---|---|---|---|---|
| NONE | B | 423-4401-724 | 1 OF 1 | A |

UNIT OF MEAS.
EA.

| SIZE | DRAWING | SHT. | REV. | PROPRIETARY INFORMATION |
|---|---|---|---|---|
| B | 423-4401-725 | 1 OF 1 | A | INFORMATION CONTAINED HEREIN IS THE PROPERTY OF HURCO MANUFACTURING COMPANY, INC. NO REPRODUCTION OR DISCLOSURE OF THIS INFORMATION SHALL BE MADE BY THE RECIPIENT TO ANY OTHER PERSON OR ORGANIZATION WITHOUT THE PRIOR WRITTEN CONSENT OF HURCO MANUFACTURING COMPANY, INC. |

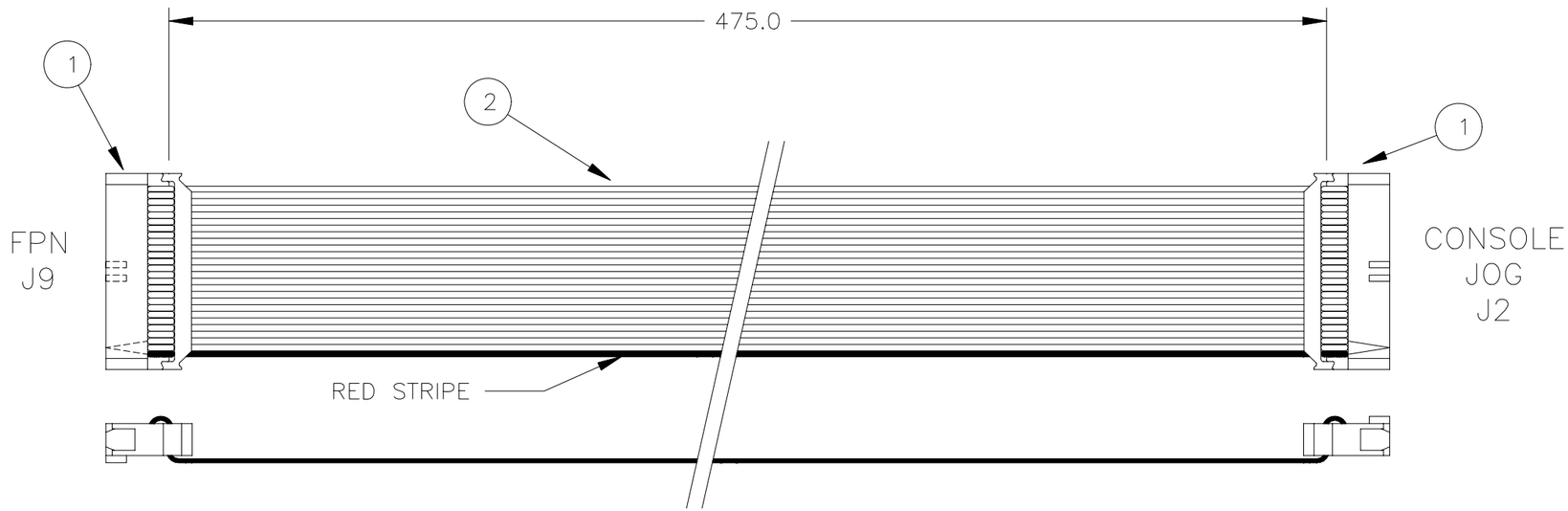


NOTES:

1. PLACE RED STRIPE AT PIN 1, BOTH ENDS.
2. LABEL HARNESS WITH HURCO PART NUMBER AND REVISION.
3. OVERALL DIMENSION IS STRAIGHT LINE
   LENGTH OF HARNESS, TOLERANCE OF ±10MM
4. LABEL CONNECTORS AS SHOWN.

PARTS LIST

| ITEM | PART NUMBER | ITEM DESCRIPTION | QTY. |
|---|---|---|---|
| 2 | 406-0806-021 | CONNECTOR, FEMALE 26 PIN | 1 |
| 510MM | 406-1560-015 | CABLE, GRAY FLAT RIBBON 26 CONDUCTOR | 2 |

| REV | E.C.N. NO. | REVISION DESCRIPTION | REV BY | DATE | CHK BY | DATE | APPD BY | DATE | DF |
|---|---|---|---|---|---|---|---|---|---|
| A | 15443 | REL | | | | | | | |

SURFACE TREATMENT

HEAT TREATMENT

FIRST USED ON
MAX

EXCEPT AS NOTED: ALL CORNERS MUST BE AS FOLLOWS
INSIDE: 1.3 X 45° OR 1.3 R MAX
OUTSIDE: 0.8 X 45° OR 1.3 R

EXCEPT AS NOTED: WELDING TOLERANCE MUST BE AS FOLLOWS ±3

EXCEPT AS NOTED: ALL DIMENSIONS IN METRIC TOLERANCE
DECIMAL
.0 ±0.8
.00 ±0.4
.000 ±0.13
.0000 ±0.013
ANGULAR ± 0°30'

THIRD ANGLE PROJECTION

HURCO MANUFACTURING COMPANY, INC.
INDIANAPOLIS, IN U.S.A.

DESCRIPTION: HARNESS, CONSOLE JOG, 475MM

| DRAWN | DATE | CHECKED | DATE | APPROVED | DATE |
|---|---|---|---|---|---|
| WRS | 2/8/02 | FWG | 7/30/02 | | |

| SCALE | SIZE | DRAWING | SHT. | REV. |
|---|---|---|---|---|
| NONE | B | 423-4401-725 | 1 OF 1 | A |

UNIT OF MEAS. EA.

| SIZE | DRAWING | SHT. | REV. |
|---|---|---|---|
| B | 423-4401-726 | 1 OF 1 | A |

PROPRIETARY INFORMATION
INFORMATION CONTAINED HEREIN IS THE PROPERTY OF HURCO MANUFACTURING COMPANY, INC. NO REPRODUCTION OR DISCLOSURE OF THIS INFORMATION SHALL BE MADE BY THE RECIPIENT TO ANY OTHER PERSON OR ORGANIZATION WITHOUT THE PRIOR WRITTEN CONSENT OF HURCO MANUFACTURING COMPANY, INC.

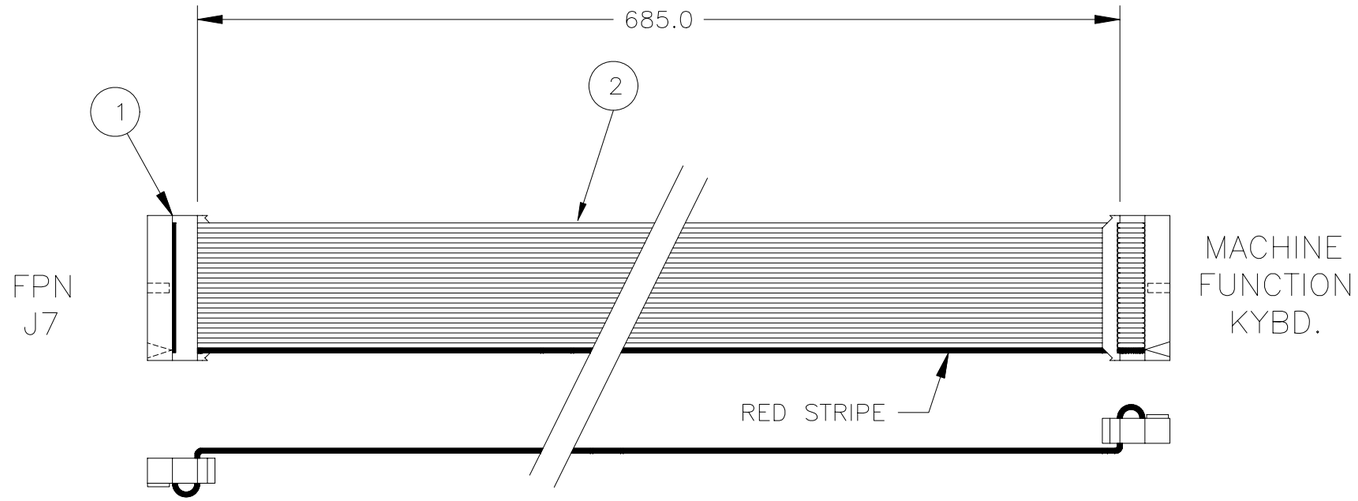


NOTES:
1. PLACE RED STRIPE AT PIN 1, BOTH ENDS.
2. LABEL HARNESS WITH HURCO PART NUMBER AND REVISION.
3. OVERALL DIMENSION IS STRAIGHT LINE
   LENGTH OF HARNESS, TOLERANCE OF ±10MM
4. LABEL CONNECTORS AS SHOWN.

| QTY. | PART NUMBER | ITEM DESCRIPTION | ITEM |
|---|---|---|---|
| 720MM | 406-1560-013 | CABLE, RIBBON 24 CONDUCTOR | 2 |
| 2 | 406-0802-086 | SOCKET, 24 POS. IDC W/STRAIN RELIEF | 1 |

PARTS LIST

| REV | E.C.N. NO. | REVISION DESCRIPTION | REV BY | DATE | CHK BY | DATE | APPD BY | DATE | DF |
|---|---|---|---|---|---|---|---|---|---|
| A | 15443 | REL | | | | | | | |

SURFACE TREATMENT

HEAT TREATMENT

FIRST USED ON
MAX

EXCEPT AS NOTED:
ALL CORNERS MUST BE AS FOLLOWS
INSIDE:
1.3 X 45° OR 1.3 R MAX
OUTSIDE:
0.8 X 45° OR 1.3 R

EXCEPT AS NOTED:
WELDING TOLERANCE MUST BE AS FOLLOWS
±3

EXCEPT AS NOTED:
ALL DIMENSIONS IN METRIC TOLERANCE
DECIMAL
.0 ±0.8
.00 ±0.4
.000 ±0.13
.0000 ±0.013
ANGULAR ± 0°30'

THIRD ANGLE PROJECTION

HURCO®
HURCO MANUFACTURING COMPANY, INC.
INDIANAPOLIS, IN U.S.A.

DESCRIPTION
HARNESS, MACHINE FUNCTION TO FPN, 685MM

| DRAWN | DATE | CHECKED | DATE | APPROVED | DATE |
|---|---|---|---|---|---|
| WRS | 2/7/02 | FWG | 7/30/02 | | |

| SCALE | SIZE | DRAWING | SHT. | REV. |
|---|---|---|---|---|
| NONE | B | 423-4401-726 | 1 OF 1 | A |

UNIT OF MEAS.
EA.

| SIZE | DRAWING | SHT. | REV. | PROPRIETARY INFORMATION |
|---|---|---|---|---|
| B | 423-4401-727 | 1 OF 1 | A | INFORMATION CONTAINED HEREIN IS THE PROPERTY OF HURCO MANUFACTURING COMPANY, INC. NO REPRODUCTION OR DISCLOSURE OF THIS INFORMATION SHALL BE MADE BY THE RECIPIENT TO ANY OTHER PERSON OR ORGANIZATION WITHOUT THE PRIOR WRITTEN CONSENT OF HURCO MANUFACTURING COMPANY, INC. |

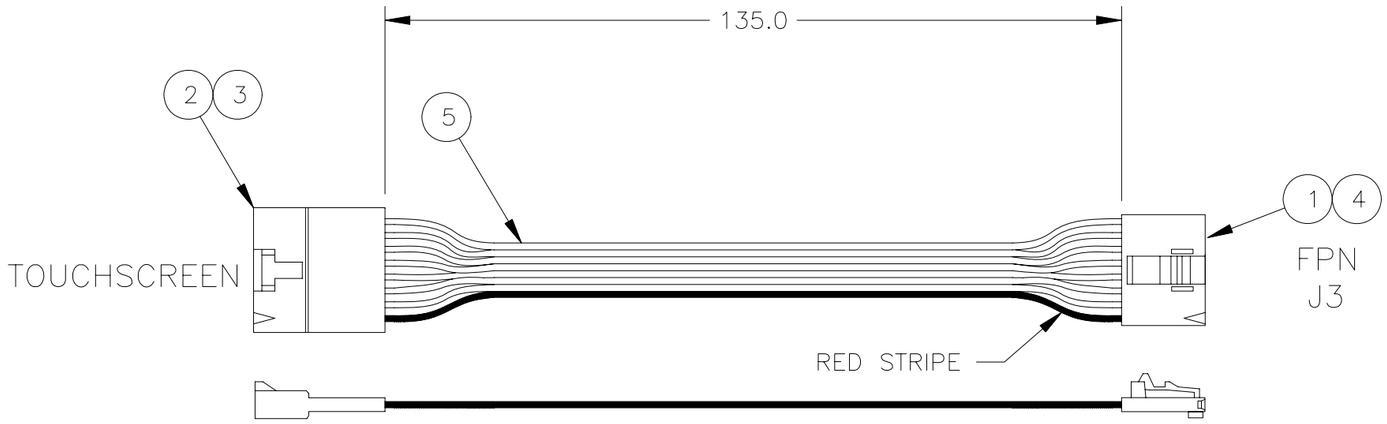


NOTES:

1. PLACE RED STRIPE AT PIN 1, BOTH ENDS.
2. LABEL HARNESS WITH HURCO PART NUMBER AND REVISION.
3. OVERALL DIMENSION IS STRAIGHT LINE
   LENGTH OF HARNESS, TOLERANCE OF ±5MM
4. LABEL CONNECTORS AS SHOWN.

PARTS LIST

| QTY. | PART NUMBER | ITEM DESCRIPTION | ITEM |
|---|---|---|---|
| 145MM | 406-1560-023 | CABLE, GRAY FLAT RIBBON 8 CONDUCTOR | 5 |
| 8 | 406-0803-913 | PIN, FEMALE 28-32 AWG MTE | 4 |
| 8 | 406-0803-911 | PIN,MALE 28-32 AWG MTE | 3 |
| 1 | 406-0803-906 | CONN,8POS MTE MALE PINS UNLOAD | 2 |
| 1 | 406-0803-909 | CONN,8POS MTE FEMALE PINS UNLD | 1 |

| REV | E.C.N. NO. | REVISION DESCRIPTION | REV BY | DATE | CHK BY | DATE | APPD BY | DATE | DF |
|---|---|---|---|---|---|---|---|---|---|
| A | 15443 | REL | | | | | | | |

SURFACE TREATMENT

HEAT TREATMENT

FIRST USED ON
MAX

EXCEPT AS NOTED:
ALL CORNERS MUST BE AS FOLLOWS
INSIDE:
1.3 X 45° OR 1.3 R MAX
OUTSIDE:
0.8 X 45° OR 1.3 R

EXCEPT AS NOTED:
WELDING TOLERANCE MUST BE AS FOLLOWS
±3

EXCEPT AS NOTED:
ALL DIMENSIONS IN METRIC TOLERANCE
DECIMAL
.0 ±0.8
.00 ±0.4
.000 ±0.13
.0000 ±0.013
ANGULAR ± 0°30'

THIRD ANGLE PROJECTION

HURCO®
HURCO MANUFACTURING COMPANY, INC.
INDIANAPOLIS, IN U.S.A.

DESCRIPTION
HARNESS, TOUCHSCREEN EXTENSION, 135MM

| DRAWN | DATE | CHECKED | DATE | APPROVED | DATE |
|---|---|---|---|---|---|
| WRS | 2/13/02. | FWG | 7/30/02 | | |

| SCALE | SIZE | DRAWING | SHT. | REV. |
|---|---|---|---|---|
| NONE | B | 423-4401-727 | 1 OF 1 | A |

UNIT OF MEAS. EA.

| SIZE | DRAWING | SHT. | REV. |
|---|---|---|---|
| B | 423-4401-728 | 1 OF 1 | A |

PROPRIETARY INFORMATION
INFORMATION CONTAINED HEREIN IS THE PROPERTY OF HURCO MANUFACTURING COMPANY, INC. NO REPRODUCTION OR DISCLOSURE OF THIS INFORMATION SHALL BE MADE BY THE RECIPIENT TO ANY OTHER PERSON OR ORGANIZATION WITHOUT THE PRIOR WRITTEN CONSENT OF HURCO MANUFACTURING COMPANY, INC.

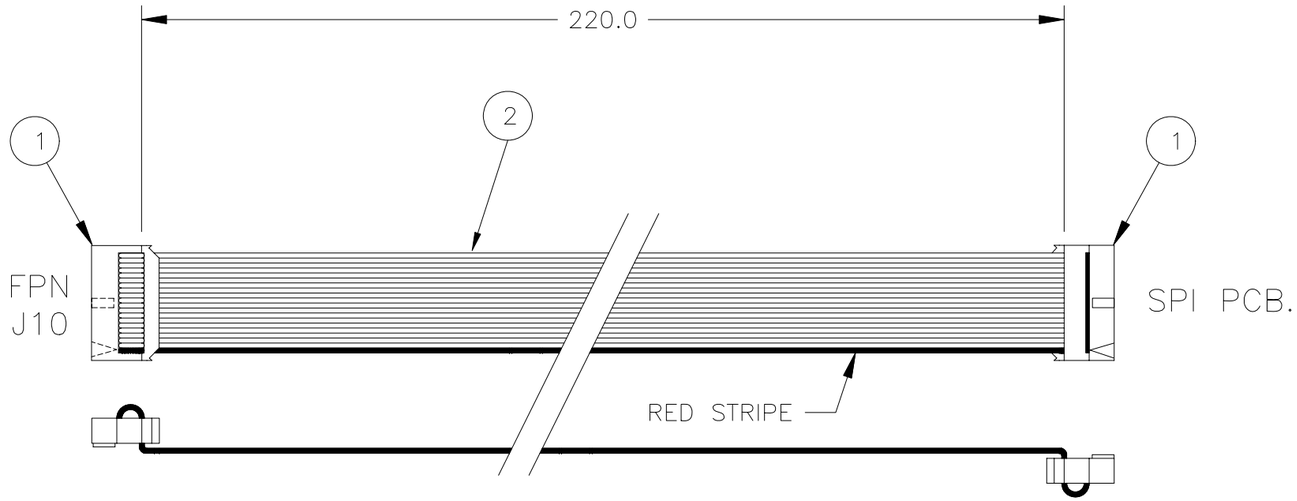


NOTES:
1. PLACE RED STRIPE AT PIN 1, BOTH ENDS.
2. LABEL HARNESS WITH HURCO PART NUMBER AND REVISION.
3. OVERALL DIMENSION IS STRAIGHT LINE
   LENGTH OF HARNESS, TOLERANCE OF ±10MM
4. LABEL CONNECTORS AS SHOWN.

PARTS LIST

| QTY. | PART NUMBER | ITEM DESCRIPTION | ITEM |
|---|---|---|---|
| 255MM | 406-1560-012 | CABLE, GRAY FLAT RIBBON 20 CONDUCTOR | 2 |
| 2 | 406-0802-083 | SOCKET, 20 POS. IDC W/STRAIN RELIEF | 1 |

| REV | E.C.N. NO. | REVISION DESCRIPTION | REV BY | DATE | CHK BY | DATE | APPD BY | DATE | DF |
|---|---|---|---|---|---|---|---|---|---|
| A | 15443 | REL | | | | | | | |

SURFACE TREATMENT ~

HEAT TREATMENT ~

FIRST USED ON: MAX

EXCEPT AS NOTED: ALL CORNERS MUST BE AS FOLLOWS
INSIDE: 1.3 X 45° OR 1.3 R MAX
OUTSIDE: 0.8 X 45° OR 1.3 R

EXCEPT AS NOTED: WELDING TOLERANCE MUST BE AS FOLLOWS ±3

EXCEPT AS NOTED: ALL DIMENSIONS IN METRIC TOLERANCE
DECIMAL
.0 ±0.8
.00 ±0.4
.000 ±0.13
.0000 ±0.013
ANGULAR ± 0°30'

THIRD ANGLE PROJECTION

HURCO MANUFACTURING COMPANY, INC.
INDIANAPOLIS, IN U.S.A.

DESCRIPTION: HARNESS, PUSHBUTTON INTERCONNECT, MAX

| DRAWN | DATE | CHECKED | DATE | APPROVED | DATE |
|---|---|---|---|---|---|
| WRS | 2/14/02 | FWG | 7/30/02 | | |

| SCALE | SIZE | DRAWING | SHT. | REV. |
|---|---|---|---|---|
| NONE | B | 423-4401-728 | 1 OF 1 | A |

UNIT OF MEAS.: EA.

| SIZE | DRAWING | SHT. | REV. | PROPRIETARY INFORMATION |
|---|---|---|---|---|
| D | 423-4401-729 | 1 OF 1 | A | INFORMATION CONTAINED HEREIN IS THE PROPERTY OF HURCO MANUFACTURING COMPANY, INC. NO REPRODUCTION OR DISCLOSURE OF THIS INFORMATION SHALL BE MADE BY THE RECIPIENT TO ANY OTHER PERSON OR ORGANIZATION WITHOUT THE PRIOR WRITTEN CONSENT OF HURCO MANUFACTURING COMPANY, INC. |

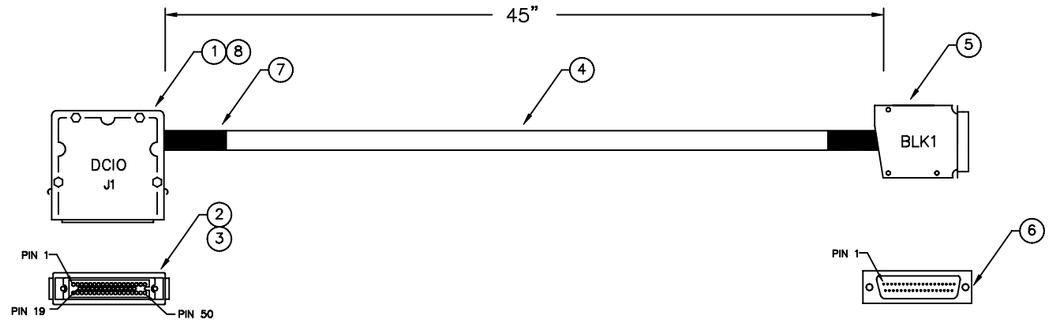


| DCIO J1 | | BLK1 | |
|---|---|---|---|
| INP1 | 1 | 1 | PART PROBE STATUS |
| INP2 | 2 | 2 | PART PROBE ERROR |
| INP3 | 34 | 3 | PART PROBE DEFLECT |
| INP4 | 19 | 4 | TOOL PROBE DEFLECT |
| INP5 | 20 | 5 | ROTATE CW SELECTOR SWITCH |
| INP6 | 4 | 6 | ROTATE CCW SELECTOR SW |
| INP7 | 36 | 7 | TOOL POCKET UP |
| INP8 | 21 | 8 | TOOL POCKET DOWN |
| INP9 | 22 | 9 | SPINDLE ALARM |
| INP10 | 6 | 10 | AIR PRESSURE SW |
| INP11 | 38 | 11 | **** |
| INP12 | 23 | 12 | **** |
| INP13 | 24 | 13 | X AXIS FAULT |
| INP14 | 8 | 14 | Y AXIS FAULT |
| INP15 | 40 | 15 | Z AXIS FAULT |
| INP16 | 25 | 16 | a AXIS FAULT |
| INP17 | 26 | 17 | a AXIS CLAMP SW |
| INP18 | 10 | 18 | a AXIS UNCLAMP SW |
| INP19 | 42 | 19 | a AXIS PRESENT |
| INP20 | 27 | 20 | LOAD ARM 0 DEG. |
| INP21 | 43 | 21 | LOAD ARM 60 DEG. |
| INP22 | 28 | 22 | ARM DOWN & 180 DEG. |
| INP23 | 12 | 23 | MAGAZINE REFERENCE POSITION |
| INP24 | 44 | 24 | MAGAZINE IN POSITION |
| INP25 | 29 | 25 | TOOL UNCLAMP PUSH BUTTON |
| INP26 | 30 | 26 | DRAWBAR CLAMP (UP) |
| INP27 | 14 | 27 | DRAWBAR UNCLAMP (DN) |
| INP28 | 46 | 28 | ORIENT COMPLETE |
| INP29 | 31 | 29 | AUX OUT 1 OFF |
| INP30 | 15 | 30 | AUX OUT 2 OFF |
| INP31 | 47 | 31 | AUX OUT 3 OFF |
| INP32 | 32 | 32 | AUX OUT 4 OFF |
| ICOM1 | 33 | 33 | MGND |
| ICOM2 | 35 | 34 | MGND |
| ICOM5 | 41 | 35 | MGND |
| ICOM6 | 45 | 36 | 24VDC |
| ICOM3 | 37 | 37 | SHLD |
| ICOM4 | 39 | | |
| SHLD | 5 | | |

NOTES:
1. MARK HARNESS WITH HURCO PART NUMBER AND REVISION.
2. OVERALL DIMENSION IS STRAIGHT LINE LENGTH OF HARNESS, +1”.
3. LABEL CONNECTORS AS SHOWN.

| QTY. | PART NUMBER | ITEM DESCRIPTION | ITEM |
|---|---|---|---|
| 3” | 406-2017-006 | WIRE, 24AWG BLUE | 8 |
| 2” | 406-6481-005 | HEATSHRINK, 3/8” BLACK | 7 |
| 1 | 406-0903-137 | CONNECTOR, DB37 RECEPTACLE W/ SOLDER CUPS | 6 |
| 1 | 406-0903-138 | BACKSHELL, DB37 W/MALE SCREW RETAINERS | 5 |
| 45” | 406-1246-014 | CABLE, 40/COND 24AWG SHLD | 4 |
| 1 | 406-0811-023 | INSULATOR, 50-POS MALE | 3 |
| 37 | 406-0811-008 | CONTACT, MALE SILVER | 2 |
| 1 | 406-0811-006 | CASE, VERT/HORZ 50 POS | 1 |

PARTS LIST

| REV | P.T.N. NO. | REVISION DESCRIPTION | REV BY | DATE | CHK BY | DATE | APPD BY | DATE | DF |
|---|---|---|---|---|---|---|---|---|---|
| A | 15352 | RELEASE | | | | | | | |

SURFACE TREATMENT

HEAT TREATMENT

FIRST USED ON: VM1

EXCEPT AS NOTED: ALL CORNERS MUST BE AS FOLLOWS
INSIDE: .050” X 45° OR .05” R MAX
OUTSIDE: .030” X 45° OR .05” R

EXCEPT AS NOTED: ALL DIMENSIONS IN INCHES TOLERANCE
DECIMAL
.0 ±.0300
.00 ±.0150
.000 ±.0050
.0000 ±.0005
ANGULAR ± 0°30’

EXCEPT AS NOTED: WELDING TOLERANCE MUST BE AS FOLLOWS ±.12

THIRD ANGLE PROJECTION

HURCO MANUFACTURING COMPANY, INC.
INDIANAPOLIS, IN U.S.A.

DESCRIPTION: HARNESS, DCIO J1, VM1

| DRAWN | DATE | CHECKED | DATE | APPROVED | DATE |
|---|---|---|---|---|---|
| ROD | 3-18-02 | | | | |

| SCALE | UNIT OF MEAS. | SIZE | DRAWING | SHT. | REV. |
|---|---|---|---|---|---|
| NONE | EA | D | 423-4401-729 | 1 OF 1 | A |

| SIZE | DRAWING | SHT. OF | REV. |
|---|---|---|---|
| D | 423-4401-730 | 1 OF 1 | A |

PROPRIETARY INFORMATION
INFORMATION CONTAINED HEREIN IS THE PROPERTY OF HURCO MANUFACTURING COMPANY, INC. NO REPRODUCTION OR DISCLOSURE OF THIS INFORMATION SHALL BE MADE BY THE RECIPIENT TO ANY OTHER PERSON OR ORGANIZATION WITHOUT THE PRIOR WRITTEN CONSENT OF HURCO MANUFACTURING COMPANY, INC.

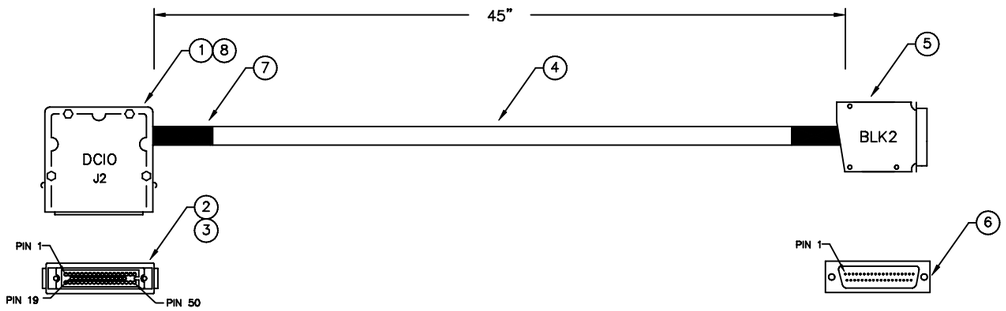


| DCIO J2 | | BLK2 | |
|---|---|---|---|
| OUTP1 | 1 | 1 | SPINDLE FAULT RESET |
| OUTP2 | 2 | 2 | ENCLOSURE INTERLOCK RUN RELAY |
| OUTP3 | 34 | 3 | PART PROBE RESET |
| OUTP4 | 19 | 4 | WORKLIGHTS ON |
| OUTP5 | 20 | 5 | OPERATIONAL LAMP, YELLOW |
| OUTP6 | 4 | 6 | a AXIS CLAMP |
| OUTP7 | 36 | 7 | SPINDLE PURGE |
| OUTP8 | 21 | 8 | ALARM LAMP, RED |
| OUTP9 | 22 | 9 | ROTATE MAGAZINE CW |
| OUTP10 | 6 | 10 | ROTATE MAGAZINE CCW |
| OUTP11 | 38 | 11 | TOOL POCKET UP |
| OUTP12 | 23 | 12 | TOOL POCKET DOWN |
| OUTP13 | 24 | 13 | CE DOOR LOCK (EDLR) |
| OUTP14 | 8 | 14 | TAPPING ACCEL/DECEL |
| OUTP15 | 40 | 15 | ORIENT COMMAND |
| OUTP16 | 25 | 16 | **** |
| OUTP17 | 26 | 17 | X AXIS CONT ENABLE |
| OUTP18 | 10 | 18 | Y AXIS CONT ENABLE |
| OUTP19 | 42 | 19 | Z AXIS CONT ENABLE |
| OUTP20 | 27 | 20 | a AXIS CONT ENABLE |
| OUTP21 | 43 | 21 | a AXIS FAULT RESET |
| OUTP22 | 28 | 22 | X AXIS FAULT RESET |
| OUTP23 | 12 | 23 | Y AXIS FAULT RESET |
| OUTP24 | 44 | 24 | Z AXIS FAULT RESET |
| OUTP25 | 29 | 25 | ARM 60° UP |
| OUTP26 | 30 | 26 | **** |
| OUTP27 | 14 | 27 | DRAWBAR RELEASE(UNCLAMP) |
| OUTP28 | 46 | 28 | CHIP AUGER REVERSE |
| OUTP29 | 31 | 29 | CHIP AUGER FORWARD |
| OUTP30 | 15 | 30 | ROTATE ARM 0 DEG. |
| OUTP31 | 47 | 31 | ROTATE ARM 60 DEG. |
| OUTP32 | 32 | 32 | MOVE ARM DOWN & 180 DEG. |
| OCOM1 | 33 | 33 | 24VDC SW |
| OCOM2 | 35 | 34 | MGND |
| OCOM4 | 39 | 35 | 24VDC |
| OCOM3 | 37 | 36 | 24VDC SW |
| OCOM6 | 45 | 37 | SHLD |
| OCOM5 | 41 | | |
| SHLD | 5 | | |

NOTES:
1. MARK HARNESS WITH HURCO PART NUMBER AND REVISION.
2. OVERALL DIMENSION IS STRAIGHT LINE LENGTH OF HARNESS, +1".
3. LABEL CONNECTORS AS SHOWN.

| QTY. | PART NUMBER | ITEM DESCRIPTION | ITEM |
|---|---|---|---|
| | | PARTS LIST | |
| 3" | 406-2017-006 | WIRE, 24AWG BLUE | 8 |
| 2" | 406-6481-005 | HEATSHRINK, 3/8" BLACK | 7 |
| 1 | 406-0903-137 | CONNECTOR, DB37 RECEPTACLE W/ SOLDER CUPS | 6 |
| 1 | 406-0903-138 | BACKSHELL, DB37 W/MALE SCREW RETAINERS | 5 |
| 45" | 406-1246-014 | CABLE, 40/COND 24AWG SHLD | 4 |
| 1 | 406-0811-023 | INSULATOR, 50-POS MALE | 3 |
| 37 | 406-0811-008 | CONTACT, MALE SILVER | 2 |
| 1 | 406-0811-006 | CASE, VERT/HORZ 50 POS | 1 |

| REV | P.I.N. NO. | REVISION DESCRIPTION | REV BY | DATE | CHK BY | DATE | APPR BY | DATE | DF |
|---|---|---|---|---|---|---|---|---|---|
| A | 15352 | RELEASE | | | | | | | |

SURFACE TREATMENT ~
HEAT TREATMENT ~
FIRST USED ON VM1

EXCEPT AS NOTED: ALL CORNERS MUST BE AS FOLLOWS
INSIDE: .050" X 45° OR .06" R MAX
OUTSIDE: .030" X 45° OR .05" R

EXCEPT AS NOTED: ALL DIMENSIONS IN INCHES TOLERANCE
DECIMAL .0 ±.0300, .00 ±.0150, .000 ±.0050, .0000 ±.0005
ANGULAR ± 0°30'

EXCEPT AS NOTED: WELDING TOLERANCE MUST BE AS FOLLOWS ±.12

THIRD ANGLE PROJECTION

HURCO MANUFACTURING COMPANY, INC.
INDIANAPOLIS, IN U.S.A.

DESCRIPTION: HARNESS, DCIO J2, VM1

| DRAWN | DATE | CHECKED | DATE | APPROVED | DATE |
|---|---|---|---|---|---|
| DEO | 20FEB98 | SAW | 3JUL98 | DEO | 8JUL98 |

SCALE NONE | UNIT OF MEAS. EA | SIZE D | DRAWING 423-4401-730 | SHT. 1 OF 1 | REV. A

| SIZE | DRAWING | SHT. | REV. |
|---|---|---|---|
| D | 423-4401-731 | 1 OF 1 | A |

PROPRIETARY INFORMATION
INFORMATION CONTAINED HEREIN IS THE PROPERTY OF HURCO MANUFACTURING COMPANY, INC. NO REPRODUCTION OR DISCLOSURE OF THIS INFORMATION SHALL BE MADE BY THE RECIPIENT TO ANY OTHER PERSON OR ORGANIZATION WITHOUT THE PRIOR WRITTEN CONSENT OF HURCO MANUFACTURING COMPANY, INC.

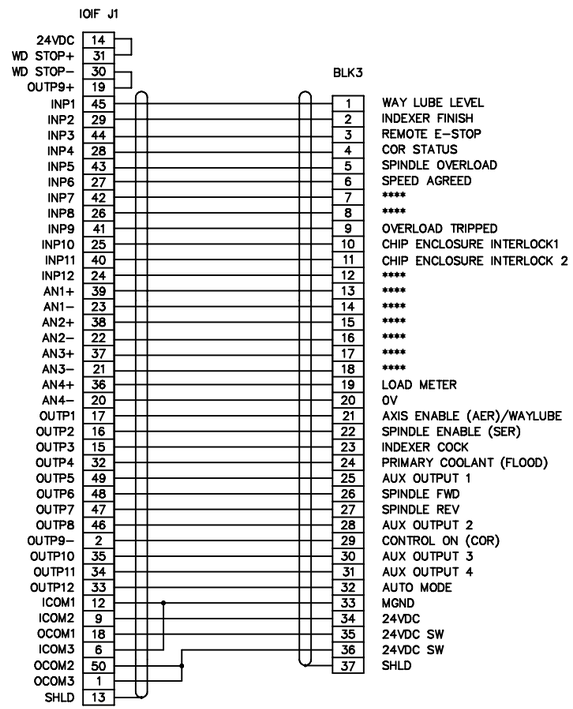


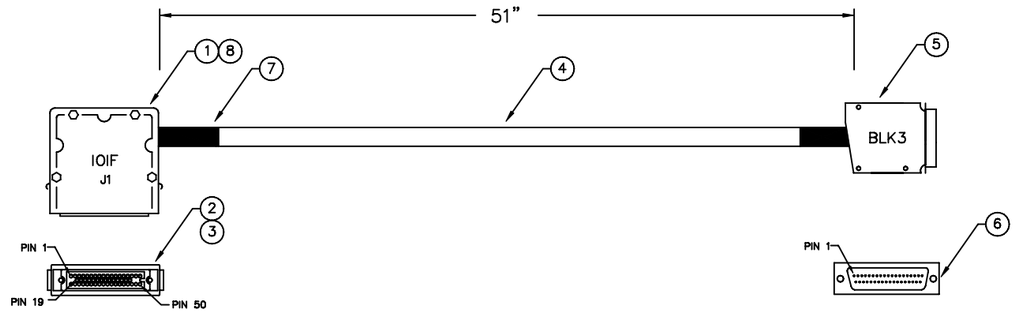


NOTES:
1. MARK HARNESS WITH HURCO PART NUMBER AND REVISION.
2. OVERALL DIMENSION IS STRAIGHT LINE LENGTH OF HARNESS, +1".
3. LABEL CONNECTORS AS SHOWN.

PARTS LIST

| QTY. | PART NUMBER | ITEM DESCRIPTION | ITEM |
|---|---|---|---|
| 4" | 406-2017-006 | WIRE, 24AWG BLUE | 8 |
| 2" | 406-6481-005 | HEATSHRINK, 3/8" BLACK | 7 |
| 1 | 406-0903-137 | CONNECTOR, DB37 RECEPTACLE W/ SOLDER CUPS | 6 |
| 1 | 406-0903-138 | BACKSHELL, DB37 W/MALE SCREW RETAINERS | 5 |
| 51" | 406-1246-014 | CABLE, 40/COND 24AWG SHLD | 4 |
| 1 | 406-0811-017 | INSULATOR, 50-POS FEMALE | 3 |
| 37 | 406-0811-010 | CONTACT, FEMALE SILVER | 2 |
| 1 | 406-0811-006 | CASE, VERT/HORZ 50 POS | 1 |

| REV | P.I.N. NO. | REVISION DESCRIPTION | BY | DATE | CHK BY | DATE | APPROD BY | DATE | DF |
|---|---|---|---|---|---|---|---|---|---|
| A | 15352 | RELEASE | | | | | | | |

SURFACE TREATMENT ~
HEAT TREATMENT ~
FIRST USED ON VM1

EXCEPT AS NOTED: ALL CORNERS MUST BE AS FOLLOWS
INSIDE: .050" X 45° OR .05" R MAX
OUTSIDE: .030" X 45° OR .05" R

EXCEPT AS NOTED: ALL DIMENSIONS IN INCHES TOLERANCE
DECIMAL
.0 ±.0300
.00 ±.0150
.000 ±.0050
.0000 ±.0005
ANGULAR ± 0°30'

EXCEPT AS NOTED: WELDING TOLERANCE MUST BE AS FOLLOWS ±.12

THIRD ANGLE PROJECTION

HURCO MANUFACTURING COMPANY, INC.
INDIANAPOLIS, IN U.S.A.

DESCRIPTION: HARNESS, IOIF J1, VM1

| DRAWN | DATE | CHECKED | DATE | APPROVED | DATE |
|---|---|---|---|---|---|
| ROD | 3-15-02 | | | | |

| SCALE | SIZE | DRAWING | SHT. | REV. |
|---|---|---|---|---|
| NONE | D | 423-4401-731 | 1 OF 1 | A |

UNIT OF MEAS: EA

| SIZE | DRAWING | SHT. | REV. |
|---|---|---|---|
| B | 423–4401–732 | 1 OF 1 | A |

PROPRIETARY INFORMATION

INFORMATION CONTAINED HEREIN IS THE PROPERTY OF HURCO MANUFACTURING COMPANY, INC. NO REPRODUCTION OR DISCLOSURE OF THIS INFORMATION SHALL BE MADE BY THE RECIPIENT TO ANY OTHER PERSON OR ORGANIZATION WITHOUT THE PRIOR WRITTEN CONSENT OF HURCO MANUFACTURING COMPANY, INC.

NOTES:

1. POPULATE ALL UNUSED POSITIONS WITH EMPTY TERMINALS.
2. LABEL AS SHOWN.

SCHEMATIC

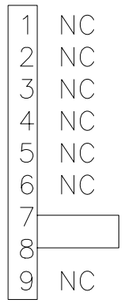


ASSEMBLY

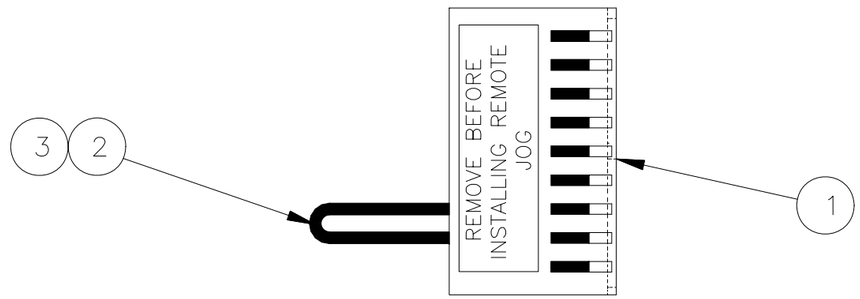


| QTY. | PART NUMBER | ITEM DESCRIPTION | ITEM |
|---|---|---|---|
| 2'' | 406–2017–003 | WIRE, 24 AWG 300 V RED | 3 |
| 9 | 406–0801–207 | TERMINAL, CRIMP, 22–30 AWG. | 2 |
| 1 | 406–0801–199 | HOUSING, 9 PIN, W/RAMP, POLARIZING | 1 |

PARTS LIST

| REV | E.C.N. NO. | REVISION DESCRIPTION | REV BY | DATE | CHK BY | DATE | APPD BY | DATE | DF |
|---|---|---|---|---|---|---|---|---|---|
| A | 15443 | REL | | | | | | | |

SURFACE TREATMENT

HEAT TREATMENT

FIRST USED ON
MAX

EXCEPT AS NOTED:
ALL CORNERS MUST BE AS FOLLOWS
INSIDE:
.050'' X 45° OR .05'' R MAX
OUTSIDE:
.030'' X 45° OR .05'' R

EXCEPT AS NOTED:
WELDING TOLERANCE MUST BE AS FOLLOWS
±.12

EXCEPT AS NOTED:
ALL DIMENSIONS IN INCHES
TOLERANCE
DECIMAL
.0 ±.0300
.00 ±.0150
.000 ±.0050
.0000 ±.0005
ANGULAR ± 0°30'

THIRD ANGLE PROJECTION

HURCO MANUFACTURING COMPANY, INC.
INDIANAPOLIS, IN U.S.A.

DESCRIPTION
HARNESS, DETENTED JOG E–STOP BYPASS

| DRAWN | DATE | CHECKED | DATE | APPROVED | DATE |
|---|---|---|---|---|---|
| WRS | 4–8–02 | FWG | 7/30/02 | | |

| SCALE | SIZE | DRAWING | SHT. | REV. |
|---|---|---|---|---|
| NONE | B | 423–4401–732 | 1 OF 1 | A |

UNIT OF MEAS. EA.

# Harness, Door Interlock, 423-4401-733—Rev. A

| SIZE | DRAWING | SHT. | REV. |
|---|---|---|---|
| D | 423-4401-733 | 1 OF 1 | A |

PROPRIETARY INFORMATION
INFORMATION CONTAINED HEREIN IS THE PROPERTY OF HURCO MANUFACTURING COMPANY, INC. NO REPRODUCTION OR DISCLOSURE OF THIS INFORMATION SHALL BE MADE BY THE RECIPIENT TO ANY OTHER PERSON OR ORGANIZATION WITHOUT THE PRIOR WRITTEN CONSENT OF HURCO MANUFACTURING COMPANY, INC.

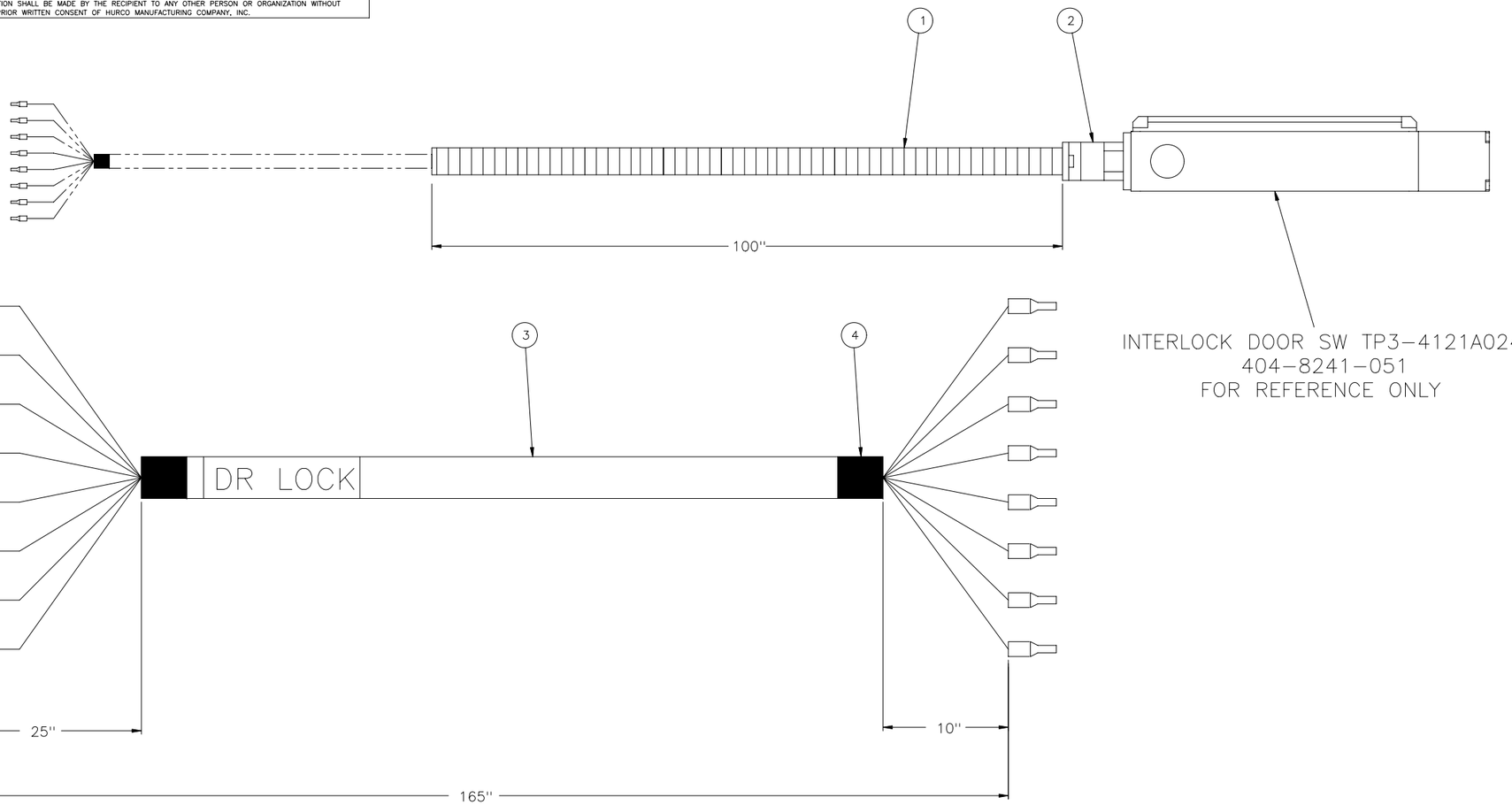


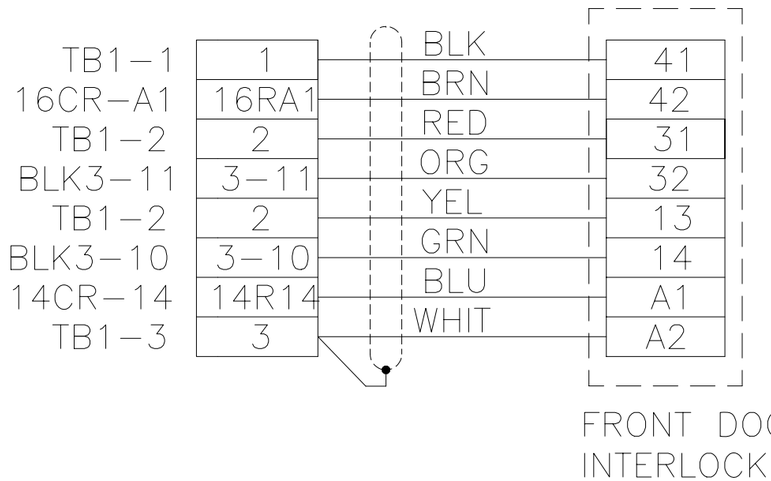


NOTES:
1. OVERALL DIMENSION IS STRAIGHT LINE LENGTH OF HARNESS, +1''.
2. MARK HARNESS WITH HURCO PART NUMBER AND REV.
3. LABEL CABLE AS SHOWN

| QTY. | PART NUMBER | ITEM DESCRIPTION | ITEM |
|---|---|---|---|
| | | PARTS LIST | |
| 16 | 406-0965-013 | FERRULE, 0.3SQMM | 5 |
| 2'' | 406-6481-004 | HEATSHRINK, 1/4'' BLACK | 4 |
| 165'' | 406-1245-002 | CABLE, 10/C, 0.3SQMM, SHLD | 3 |
| 1 | 408-0171-080 | FITTING, PG13.5, 5/16'' CONDUIT | 2 |
| 100'' | 408-0171-082 | CONDUIT, 5/16'' BLACK FLEXIBLE | 1 |

| REV | P.I.N. NO. | REVISION DESCRIPTION | REV BY | DATE | CHK BY | DATE | APPD BY | DATE | DF |
|---|---|---|---|---|---|---|---|---|---|
| A | 15352 | RELEASE | | | | | | | |

SURFACE TREATMENT ~
HEAT TREATMENT ~
FIRST USED ON VM1

EXCEPT AS NOTED: ALL CORNERS MUST BE AS FOLLOWS
INSIDE: .050" X 45° OR .05" R MAX
OUTSIDE: .030" X 45° OR .05" R

EXCEPT AS NOTED: ALL DIMENSIONS IN INCHES TOLERANCE
DECIMAL .0 ±.0300; .00 ±.0150; .000 ±.0050; .0000 ±.0005
ANGULAR ± 0°30'

EXCEPT AS NOTED: WELDING TOLERANCE MUST BE AS FOLLOWS ±.12

THIRD ANGLE PROJECTION

HURCO MANUFACTURING COMPANY, INC.
INDIANAPOLIS, IN U.S.A.

DESCRIPTION: HARNESS, DOOR INTERLOCK

| DRAWN | DATE | CHECKED | DATE | APPROVED | DATE |
|---|---|---|---|---|---|
| ROD | 3-19-02 | | | | |

| SCALE | SIZE | DRAWING | SHT. | REV. |
|---|---|---|---|---|
| NONE | D | 423-4401-733 | 1 OF 1 | A |

UNIT OF MEAS: EA

| SIZE | DRAWING | SHT. | REV. |
|---|---|---|---|
| B | 423-4401-734 | 1 OF 1 | A |

PROPRIETARY INFORMATION

INFORMATION CONTAINED HEREIN IS THE PROPERTY OF HURCO MANUFACTURING COMPANY, INC. NO REPRODUCTION OR DISCLOSURE OF THIS INFORMATION SHALL BE MADE BY THE RECIPIENT TO ANY OTHER PERSON OR ORGANIZATION WITHOUT THE PRIOR WRITTEN CONSENT OF HURCO MANUFACTURING COMPANY, INC.

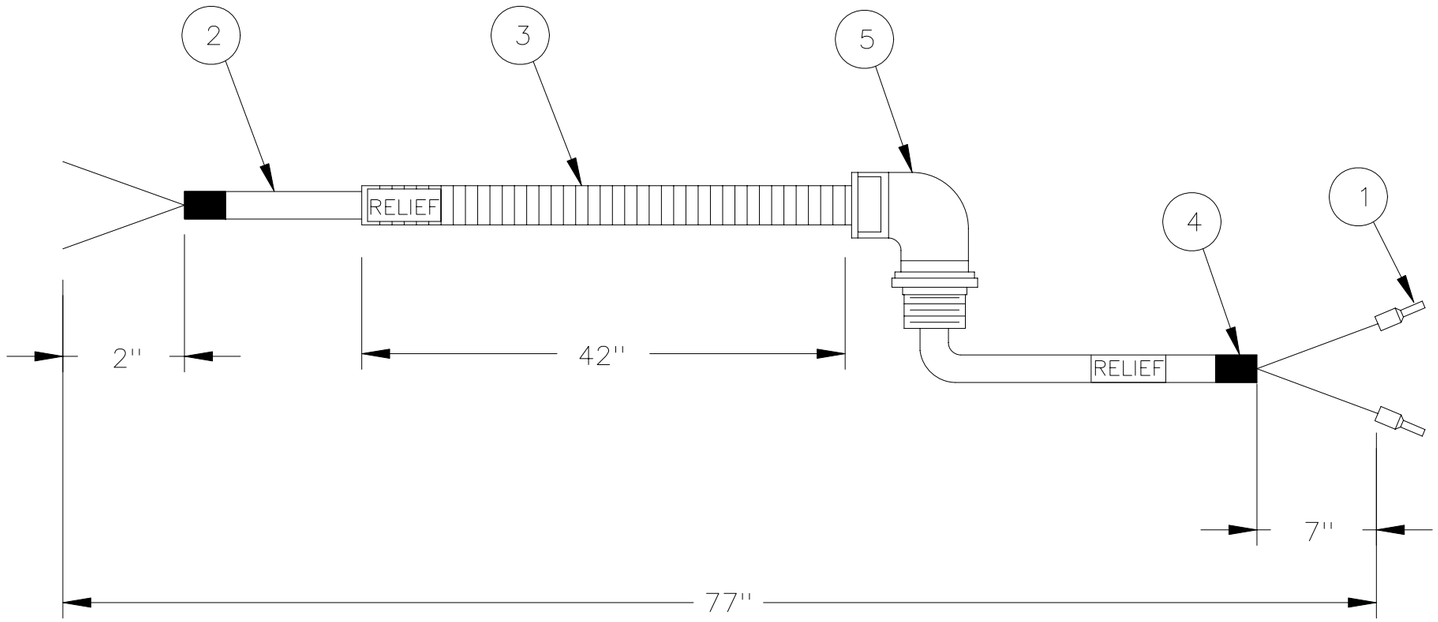


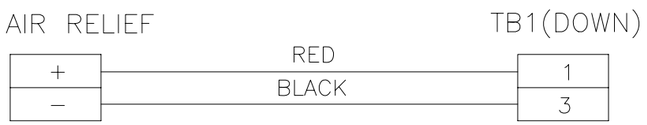


NOTE:

1. DIMENSIONS ARE SHOWN AS INCHES.

PARTS LIST

| QTY. | PART NUMBER | ITEM DESCRIPTION | ITEM |
|---|---|---|---|
| 1 | 408-0171-084 | FITTING, PG9 90°, CONDUIT 5/16'' | 5 |
| 2'' | 780-0003-003 | HEATSHRINK, 8MM DIA | 4 |
| 42'' | 408-0171-057 | CONDUIT, 5/16'' BLACK FLEXIBLE | 3 |
| 77'' | 406-1247-046 | CABLE, 2-COND, 20AWG | 2 |
| 2 | 406-0965-002 | FERRULE. 20AWG | 1 |

| REV | E.C.N. NO. | REVISION DESCRIPTION | REV BY | DATE | CHK BY | DATE | APPD BY | DATE | DF |
|---|---|---|---|---|---|---|---|---|---|
| A | 15352 | REL | | | | | | | |

SURFACE TREATMENT

HEAT TREATMENT

FIRST USED ON VM1

EXCEPT AS NOTED: ALL CORNERS MUST BE AS FOLLOWS
INSIDE: 1.3 X 45° OR 1.3 R MAX
OUTSIDE: 0.8 X 45° OR 1.3 R

EXCEPT AS NOTED: WELDING TOLERANCE MUST BE AS FOLLOWS ±3

EXCEPT AS NOTED: ALL DIMENSIONS IN METRIC TOLERANCE
DECIMAL .0 ±0.8, .00 ±0.4, .000 ±0.13, .0000 ±0.013
ANGULAR ± 0°30'

THIRD ANGLE PROJECTION

HURCO MANUFACTURING COMPANY, INC.
INDIANAPOLIS, IN U.S.A.

DESCRIPTION: HARNESS,AIR RELIEF SOLENOID

| DRAWN | DATE | CHECKED | DATE | APPROVED | DATE |
|---|---|---|---|---|---|
| ROD | 3-13-02 | | | | |

| SCALE | SIZE | DRAWING | SHT. | REV. |
|---|---|---|---|---|
| NONE | B | 423-4401-734 | 1 OF 1 | A |

UNIT OF MEAS. EA.

# Harness, ATC CW/CCW Motor Power, 423-4401-735—Rev. B

| SIZE | DRAWING | SHT. | REV. |
|---|---|---|---|
| B | 423-4401-735 | 1 OF 1 | B |

PROPRIETARY INFORMATION

INFORMATION CONTAINED HEREIN IS THE PROPERTY OF HURCO MANUFACTURING COMPANY, INC. NO REPRODUCTION OR DISCLOSURE OF THIS INFORMATION SHALL BE MADE BY THE RECIPIENT TO ANY OTHER PERSON OR ORGANIZATION WITHOUT THE PRIOR WRITTEN CONSENT OF HURCO MANUFACTURING COMPANY, INC.

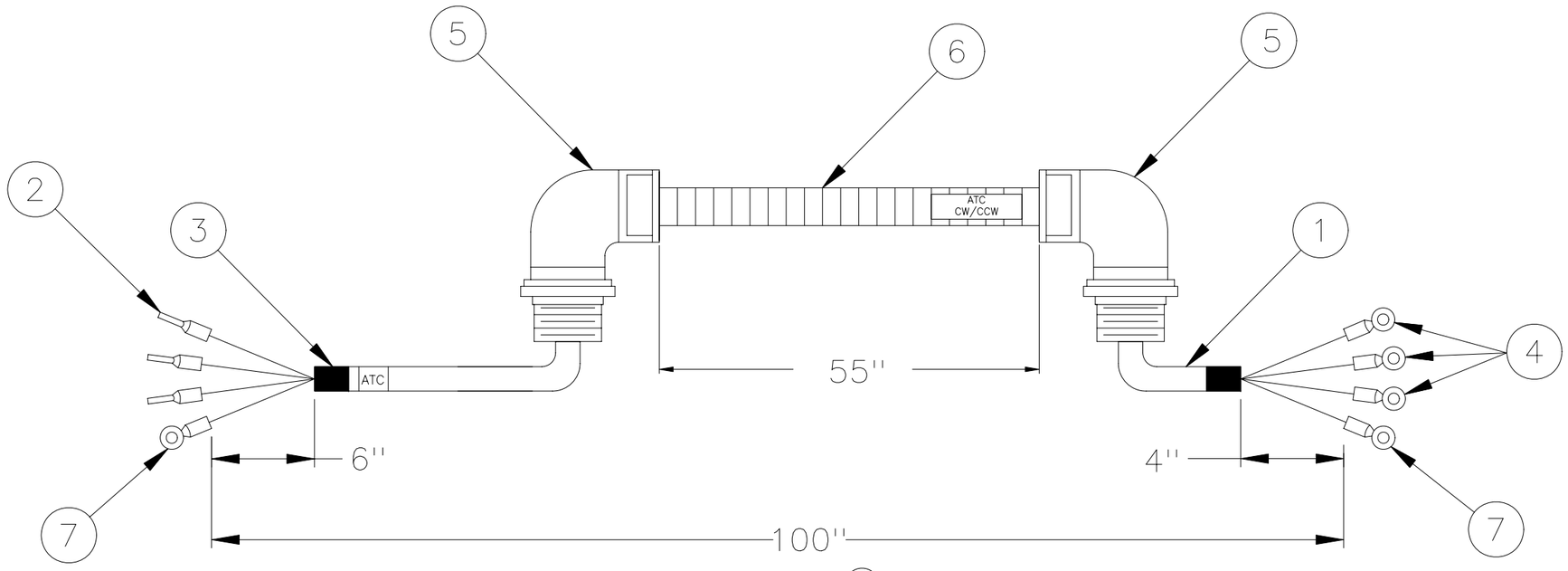


ATC CW/CCW OVERLOAD RELAY

| | |
|---|---|
| 2 | U1 |
| 4 | V1 |
| 6 | W1 |
| G | G |

ATC CW/CCW MOTOR

NOTES:
1. MARK HARNESS WITH HURCO PART NUMBER AND REVISION.
2. OVERALL DIMENSION IS STRAIGHT LINE LENGTH OF HARNESS, ±1''.
3. LABEL CONNECTORS AS SHOWN.

PARTS LIST

| ITEM | ITEM DESCRIPTION | PART NUMBER | QTY. |
|---|---|---|---|
| 7 | RING, TONGUE 1.25-5R | 780-0002-021 | 2 |
| 6 | CONDUIT, 3/8'' BLACK FLEXIBLE | 408-0171-056 | 55'' |
| 5 | FITTING, PG11 90°, CONDUIT 3/8'' | 408-0171-013 | 2 |
| 4 | RING, TONGUE 1.25-4R | 780-0002-004 | 3 |
| 3 | HEATSHRINK, 3/8'' BLACK | 406-6481-005 | 2'' |
| 2 | FERRULE, 16AWG LT YELLOW | 406-0965-005 | 4 |
| 1 | CABLE, 4/COND 16AWG | 406-1243-005 | B1 100'' |

| REV | P.I.N. NO. | REVISION DESCRIPTION | REV BY | DATE | CHK BY | DATE | APPD BY | DATE | DF |
|---|---|---|---|---|---|---|---|---|---|
| B | 157121 | 1) WAS 87'' | ROD | 8 NOV 04 | | | | | |
| A | 153521 | RELEASE | | | | | | | |

SURFACE TREATMENT

HEAT TREATMENT

FIRST USED ON VM1

EXCEPT AS NOTED: ALL CORNERS MUST BE AS FOLLOWS
INSIDE: .050'' X 45° OR .05'' R MAX
OUTSIDE: .030'' X 45° OR .05'' R

EXCEPT AS NOTED: WELDING TOLERANCE MUST BE AS FOLLOWS ±.12

EXCEPT AS NOTED: ALL DIMENSIONS IN INCHES TOLERANCE
DECIMAL .0 ±.0300, .00 ±.0150, .000 ±.0050, .0000 ±.0005
ANGULAR ± 0°30'

THIRD ANGLE PROJECTION

HURCO MANUFACTURING COMPANY, INC.
INDIANAPOLIS, IN U.S.A.

DESCRIPTION: HARNESS, ATC CW/CCW MOTOR POWER

| DRAWN | DATE | CHECKED | DATE | APPROVED | DATE |
|---|---|---|---|---|---|
| ROD | 3-13-02 | | | | |

| SCALE | SIZE | DRAWING | SHT. | REV. |
|---|---|---|---|---|
| NONE | B | 423-4401-735 | 1 OF 1 | B |

UNIT OF MEAS. EA.

| SIZE | DRAWING | SHT. | REV. |
|---|---|---|---|
| C | 423-4401-736 | 1 OF 1 | A |

PROPRIETARY INFORMATION
INFORMATION CONTAINED HEREIN IS THE PROPERTY OF HURCO MANUFACTURING COMPANY, INC. NO REPRODUCTION OR DISCLOSURE OF THIS INFORMATION SHALL BE MADE BY THE RECIPIENT TO ANY OTHER PERSON OR ORGANIZATION WITHOUT THE PRIOR WRITTEN CONSENT OF HURCO MANUFACTURING COMPANY, INC.

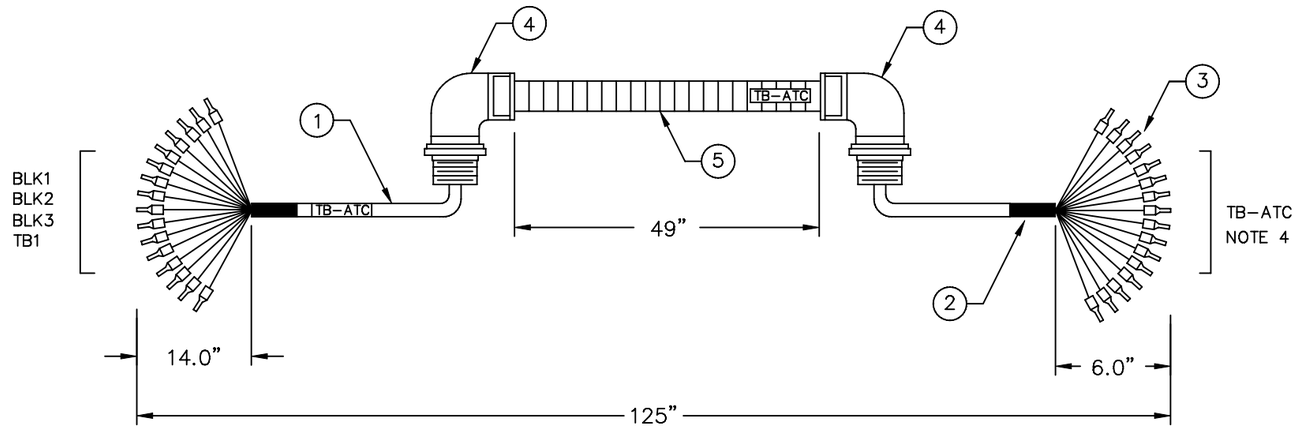


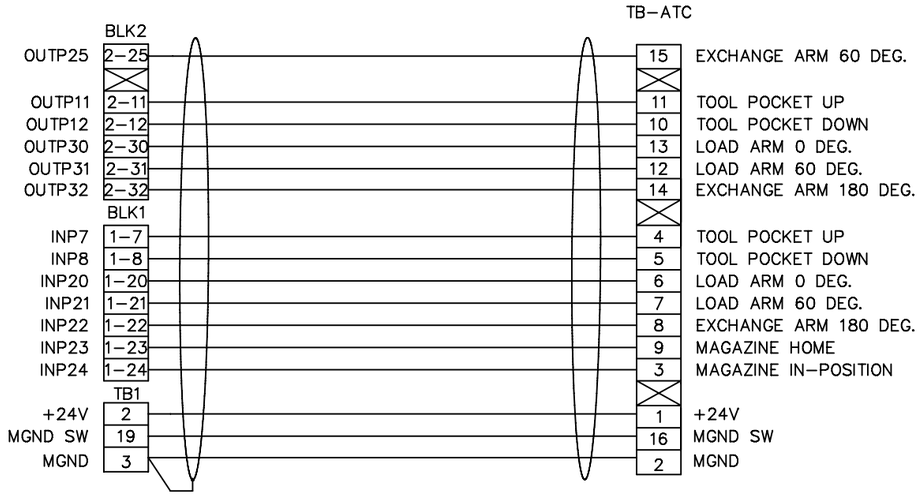


NOTES:
1. MARK HARNESS WITH HURCO PART NUMBER AND REVISION.
2. OVERALL DIMENSION IS STRAIGHT LINE LENGTH, +1".
3. LABEL CONNECTOR AS SHOWN.
4. STRIP LENGTH AS SHOW.

PARTS LIST

| QTY. | PART NUMBER | ITEM DESCRIPTION | ITEM |
|---|---|---|---|
| 49" | 408-0171-055 | CONDUIT,1/2" BLACK FLEXIBLE | 5 |
| 2 | 408-0171-014 | FITTING, 1/2", 90° | 4 |
| 33 | 406-0965-014 | FERRULE, 24AWG LT YELLOW | 3 |
| 4" | 406-6481-005 | SHRINK TUBE, 3/8" BLACK | 2 |
| 125" | 406-1246-012 | CABLE, 20/COND, 22AWG SHLD | 1 |

| REV | P.I.N. NO. | REVISION DESCRIPTION | REV BY | DATE | CHK BY | DATE | APPD BY | DATE | DF |
|---|---|---|---|---|---|---|---|---|---|
| A | 15352 | RELEASE | | | | | | | |

SURFACE TREATMENT
HEAT TREATMENT
FIRST USED ON VM1

EXCEPT AS NOTED: ALL CORNERS MUST BE AS FOLLOWS
INSIDE: .050" X 45° OR .05" R MAX
OUTSIDE: .030" X 45° OR .05" R

EXCEPT AS NOTED: WELDING TOLERANCE MUST BE AS FOLLOWS ±.12

EXCEPT AS NOTED: ALL DIMENSIONS IN INCHES TOLERANCE
DECIMAL .0 ±.0300, .00 ±.0150, .000 ±.0050, .0000 ±.0005
ANGULAR ± 0°30'

THIRD ANGLE PROJECTION

HURCO MANUFACTURING COMPANY, INC.
INDIANAPOLIS, IN U.S.A.

DESCRIPTION: HARNESS, DISK ATC

| DRAWN | DATE | | DATE | APPROVED | DATE |
|---|---|---|---|---|---|
| ROD | 3-13-02 | | | | |

| SCALE | SIZE | DRAWING | SHT. | REV. |
|---|---|---|---|---|
| NONE | C | 423-4401-736 | 1 OF 1 | A |

UNIT OF MEAS. EA

| SIZE | DRAWING | SHT. | REV. | PROPRIETARY INFORMATION |
|---|---|---|---|---|
| B | 423–4401–737 | 1 OF 1 | A | INFORMATION CONTAINED HEREIN IS THE PROPERTY OF HURCO MANUFACTURING COMPANY, INC. NO REPRODUCTION OR DISCLOSURE OF THIS INFORMATION SHALL BE MADE BY THE RECIPIENT TO ANY OTHER PERSON OR ORGANIZATION WITHOUT THE PRIOR WRITTEN CONSENT OF HURCO MANUFACTURING COMPANY, INC. |

DCD/J2

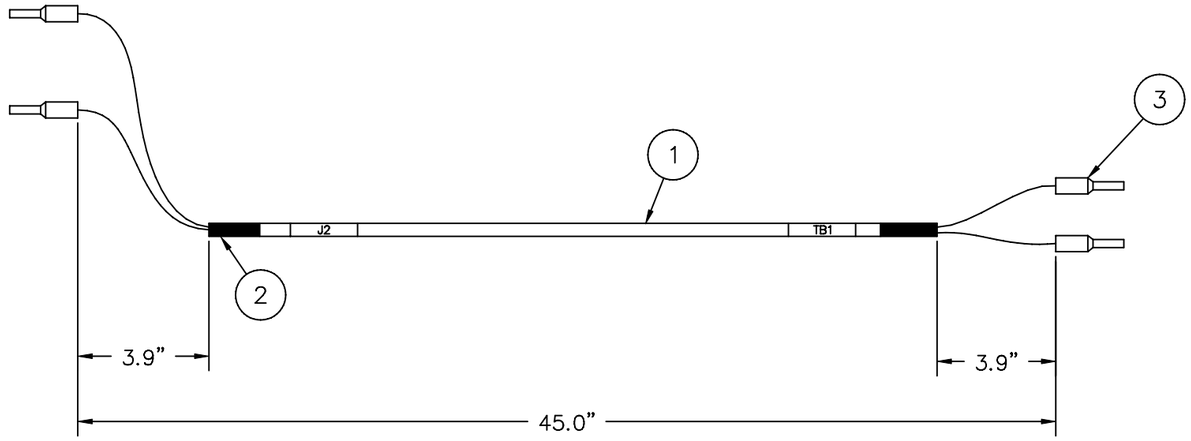


## SCHEMATIC DIAGRAM

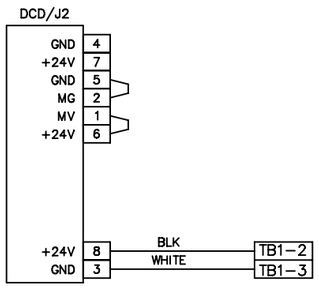


NOTES:

1. MARK HARNESS WITH HURCO PART NUMBER AND REVISION LETTER.
2. OVERALL DIMENSION IS STRAIGHT LINE LENGTH OF HARNESS, TOLERANCE ±1”.
3. LABEL CONNECTORS AS SHOWN.

PARTS LIST

| QTY. | PART NUMBER | ITEM DESCRIPTION | ITEM |
|---|---|---|---|
| 4 | 406–0965–005 | FERRULE, 16AWG | 3 |
| 4” | 406–6481–004 | HEATSHRINK, 1/4” BLACK | 2 |
| 45” | 406–1247–080 | CABLE, 2/COND 16AWG | 1 |

| REV | P.I.N. NO. | REVISION DESCRIPTION | REV BY | DATE | CHK BY | DATE | APPD BY | DATE | DF |
|---|---|---|---|---|---|---|---|---|---|
| A | 15352 | RELEASE | | | | | | | |

SURFACE TREATMENT ~

HEAT TREATMENT ~

FIRST USED ON VM1

EXCEPT AS NOTED: ALL CORNERS MUST BE AS FOLLOWS
INSIDE: .050” X 45° OR .05” R MAX
OUTSIDE: .030” X 45° OR .05” R

EXCEPT AS NOTED: WELDING TOLERANCE MUST BE AS FOLLOWS ±.12

EXCEPT AS NOTED: ALL DIMENSIONS IN INCHES
TOLERANCE
DECIMAL
.0 ±.0300
.00 ±.0150
.000 ±.0050
.0000 ±.0005
ANGULAR ± 0°30’

THIRD ANGLE PROJECTION

HURCO MANUFACTURING COMPANY, INC.
INDIANAPOLIS, IN U.S.A.

DESCRIPTION: HARNESS, DC POWER

| DRAWN | DATE | CHECKED | DATE | APPROVED | DATE |
|---|---|---|---|---|---|
| ROD | 3–13–02 | | | | |

| SCALE | SIZE | DRAWING | SHT. | REV. |
|---|---|---|---|---|
| NONE | B | 423–4401–737 | 1 OF 1 | A |

UNIT OF MEAS. EA.

| SIZE | DRAWING | SHT. | REV. | PROPRIETARY INFORMATION |
|---|---|---|---|---|
| B | 423–4401–738 | 1 OF 1 | A | INFORMATION CONTAINED HEREIN IS THE PROPERTY OF HURCO MANUFACTURING COMPANY, INC. NO REPRODUCTION OR DISCLOSURE OF THIS INFORMATION SHALL BE MADE BY THE RECIPIENT TO ANY OTHER PERSON OR ORGANIZATION WITHOUT THE PRIOR WRITTEN CONSENT OF HURCO MANUFACTURING COMPANY, INC. |

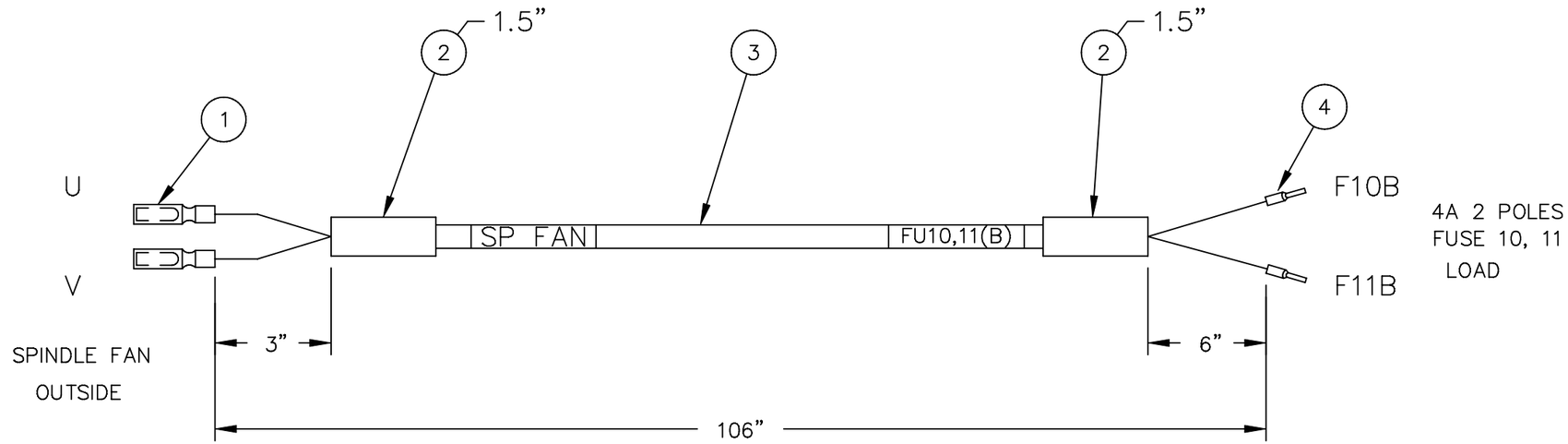


NOTE:
DIMENSIONS ARE SHOWN AS INCHES

PARTS LIST

| QTY. | PART NUMBER | ITEM DESCRIPTION | ITEM |
|---|---|---|---|
| 2 | 406–0965–005 | FERRULE, 16AWG | 4 |
| 106” | 406–1242–010 | CABLE, 2–COND, 1.25 SQ MM | 3 |
| 3” | 780–0003–001 | HEATSHRINK, 4MM DIA | 2 |
| 2 | 406–0802–098 | BULLET SOCKET F1.25–A | 1 |

| REV | P.I.N. NO. | REVISION DESCRIPTION | REV BY | DATE | CHK BY | DATE | APPD BY | DATE | DF |
|---|---|---|---|---|---|---|---|---|---|
| A | 15352 | REL | | | | | | | |

SURFACE TREATMENT ~
HEAT TREATMENT ~
FIRST USED ON VM1

EXCEPT AS NOTED: ALL CORNERS MUST BE AS FOLLOWS
INSIDE: 1.3 X 45° OR 1.3 R MAX
OUTSIDE: 0.8 X 45° OR 1.3 R

EXCEPT AS NOTED: WELDING TOLERANCE MUST BE AS FOLLOWS ±3

EXCEPT AS NOTED: ALL DIMENSIONS IN METRIC TOLERANCE
DECIMAL .0 ±0.8, .00 ±0.4, .000 ±0.13, .0000 ±0.013
ANGULAR ± 0°30'

THIRD ANGLE PROJECTION

HURCO MANUFACTURING COMPANY, INC.
INDIANAPOLIS, IN U.S.A.

| DESCRIPTION | | | | | |
|---|---|---|---|---|---|
| HARNESS, SPINDLE MOTOR FAN | | | | | |
| DRAWN | DATE | CHECKED | DATE | APPROVED | DATE |
| ROD | 3–12–02 | | | | |
| SCALE | SIZE | DRAWING | | SHT. | REV. |
| NONE | B | 423–4401–738 | | 1 OF 1 | A |
| UNIT OF MEAS. EA. | | | | | |

| SIZE | DRAWING | SHT. | REV. | PROPRIETARY INFORMATION |
|---|---|---|---|---|
| C | 423–4401–739 | 1 OF 1 | A | INFORMATION CONTAINED HEREIN IS THE PROPERTY OF HURCO MANUFACTURING COMPANY, INC. NO REPRODUCTION OR DISCLOSURE OF THIS INFORMATION SHALL BE MADE BY THE RECIPIENT TO ANY OTHER PERSON OR ORGANIZATION WITHOUT THE PRIOR WRITTEN CONSENT OF HURCO MANUFACTURING COMPANY, INC. |

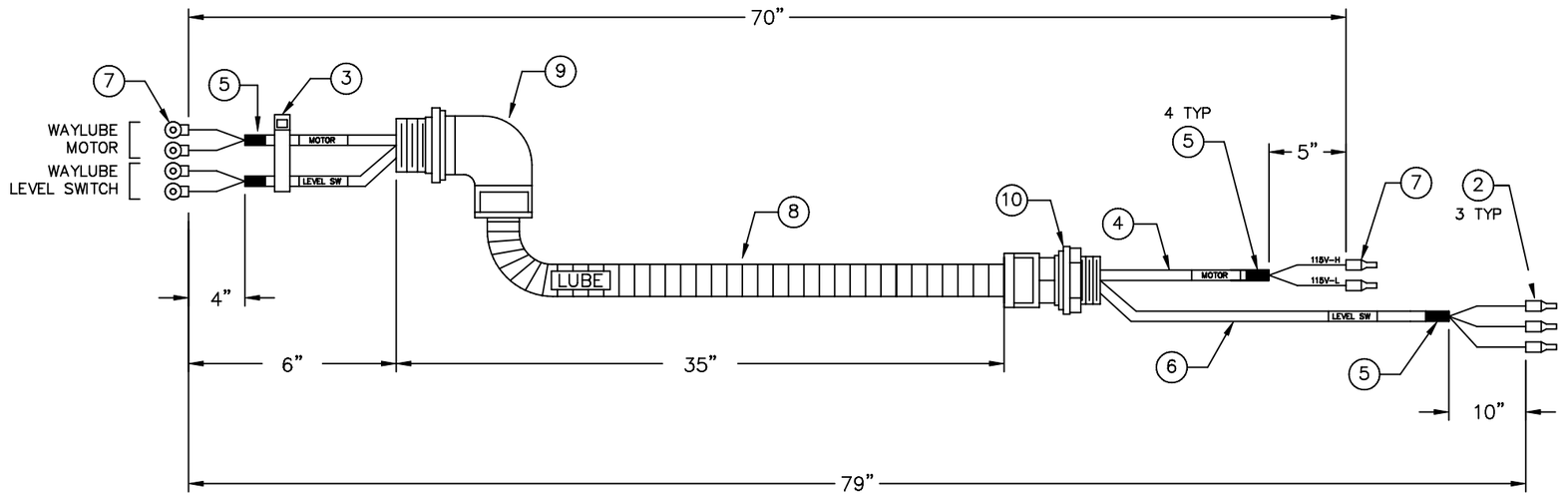


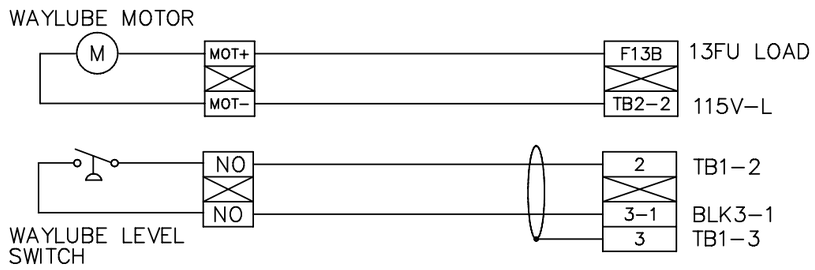


NOTES:
1. MARK HARNESS WITH HURCO PART NUMBER AND REVISION.
2. OVERALL DIMENSION IS STRAIGHT LINE LENGTH OF HARNESS, +1”.
3. LABEL CABLE AS SHOWN.

| QTY. | PART NUMBER | ITEM DESCRIPTION | ITEM |
|---|---|---|---|
| 1 | 408–0171–060 | FITTING, PG16 CONDUIT 1/2”, | 10 |
| 1 | 408–0171–014 | FITTING, PG16 90 DEG, CONDUIT 1/2” | 9 |
| 35” | 408–0171–055 | CONDUIT, 1/2”, BLACK, FLEXIBLE | 8 |
| 2 | 406–0965–003 | FERRULE, 18AWG LT BLUE | 7 |
| 79” | 406–1245–007 | CABLE, 2/COND, 24AWG, SHLD | 6 |
| 6” | 406–6481–004 | HEATSHRINK, 1/4” BLACK | 5 |
| 70” | 406–1247–063 | CABLE, 2/COND, 18AWG, UNSHLD | 4 |
| 1 | 406–5001–003 | TIE WRAP, SMALL | 3 |
| 3 | 406–0965–014 | FERRULE, 24AWG LT YELLOW | 2 |
| 4 | 780–0002–004 | RING TONGUE, 1.25–4R | 1 |

PARTS LIST

| REV | P.I.N. NO. | REVISION DESCRIPTION | REV BY | DATE | CHK BY | DATE | APPD BY | DATE | DF |
|---|---|---|---|---|---|---|---|---|---|
| A | 15352 | RELEASE | | | | | | | |

SURFACE TREATMENT

HEAT TREATMENT

FIRST USED ON: VM1

EXCEPT AS NOTED: ALL CORNERS MUST BE AS FOLLOWS
INSIDE: .050” X 45° OR .05” R MAX
OUTSIDE: .030” X 45° OR .05” R

EXCEPT AS NOTED: WELDING TOLERANCE MUST BE AS FOLLOWS ±.12

EXCEPT AS NOTED: ALL DIMENSIONS IN INCHES TOLERANCE
DECIMAL
.0 ±.0300
.00 ±.0150
.000 ±.0050
.0000 ±.0005
ANGULAR ± 0°30’

THIRD ANGLE PROJECTION

HURCO MANUFACTURING COMPANY, INC.
INDIANAPOLIS, IN U.S.A.

| DESCRIPTION | | | | | |
|---|---|---|---|---|---|
| HARNESS, LUBE | | | | | |
| DRAWN | DATE | CHECKED | DATE | APPROVED | DATE |
| ROD | 3–13–02 | | | | |
| SCALE: NONE | SIZE: C | DRAWING: 423–4401–739 | SHT. 1 OF 1 | REV. A | |
| UNIT OF MEAS: EA | | | | | |

| SIZE | DRAWING | SHT. | REV. |
|---|---|---|---|
| B | 423-4401-740 | 1 OF 1 | A |

PROPRIETARY INFORMATION
INFORMATION CONTAINED HEREIN IS THE PROPERTY OF HURCO MANUFACTURING COMPANY, INC. NO REPRODUCTION OR DISCLOSURE OF THIS INFORMATION SHALL BE MADE BY THE RECIPIENT TO ANY OTHER PERSON OR ORGANIZATION WITHOUT THE PRIOR WRITTEN CONSENT OF HURCO MANUFACTURING COMPANY, INC.

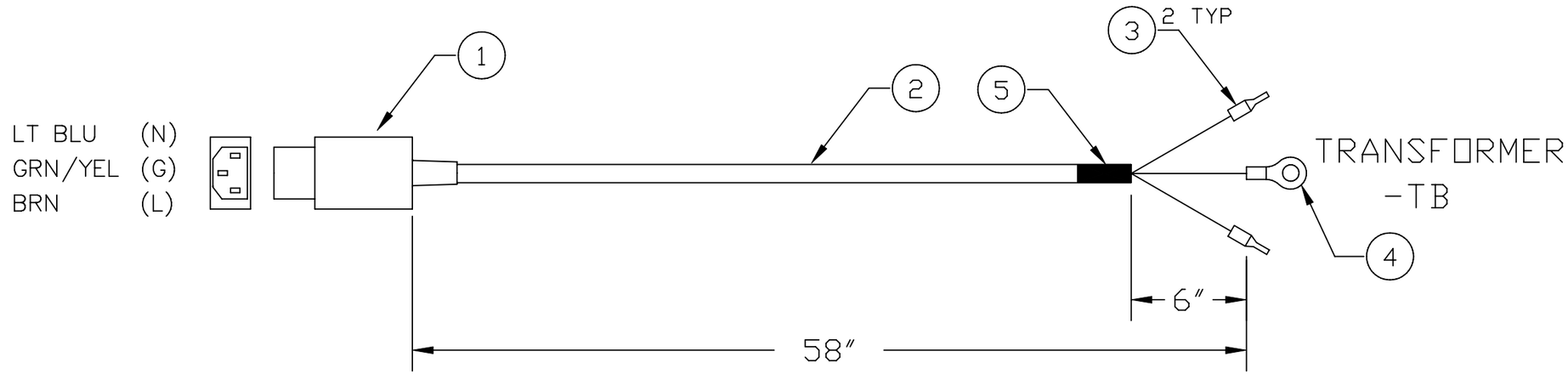


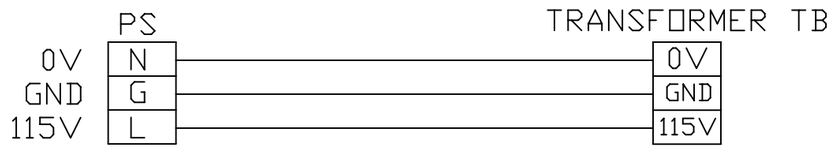


NOTES:
1. SOLDER THREE CONNECTIONS.
2. MARK PART NUMBER AND REVISION ON HARNESS.

PARTS LIST

| QTY. | PART NUMBER | ITEM DESCRIPTION | ITEM |
|---|---|---|---|
| 1.5″ | 406-6481-005 | HEATSHRINK, 3/8″ BLACK | 5 |
| 1 | 780-0002-021 | RING TONGUE,1.25-5R | 4 |
| 2 | 406-0965-003 | FERRULE, 18AWG LT BLUE | 3 |
| 58″ | 406-1247-096 | CABLE, 3 COND 18 AWG SJT | 2 |
| 1 | 406-0921-011 | PLUG, IEC 320 STRAIGHT ENTRY | 1 |

| REV | E.C.N. NO. | REVISION DESCRIPTION | REV BY | DATE | CHK BY | DATE | APPD BY | DATE | DF |
|---|---|---|---|---|---|---|---|---|---|
| A | 15352 | RELEASE | | | | | | | |

SURFACE TREATMENT

HEAT TREATMENT

FIRST USED ON
VM1

EXCEPT AS NOTED:
ALL DIMENSIONS IN INCHES
TOLERANCE
DECIMAL
.0 ±.0300
.00 ±.0150
.000 ±.0050
.0000 ±.0005
ANGULAR ± 0°30′
BREAK ALL SHARP EDGES

THIRD ANGLE PROJECTION

HURCO MANUFACTURING COMPANY, INC.
INDIANAPOLIS, IN U.S.A.

DESCRIPTION
HARNESS, IEC FEM POWER

| DRAWN | DATE | CHECKED | DATE | APPROVED | DATE |
|---|---|---|---|---|---|
| ROD | 3-13-02 | | | | |

| SCALE | SIZE | DRAWING | SHT. | REV. |
|---|---|---|---|---|
| NONE | B | 423-4401-740 | 1 OF 1 | A |

UNIT OF MEAS
PC

| SIZE | DRAWING | SHT. | REV. |
|---|---|---|---|
| B | 423-4401-741 | 1 OF 1 | A |

PROPRIETARY INFORMATION
INFORMATION CONTAINED HEREIN IS THE PROPERTY OF HURCO MANUFACTURING COMPANY, INC. NO REPRODUCTION OR DISCLOSURE OF THIS INFORMATION SHALL BE MADE BY THE RECIPIENT TO ANY OTHER PERSON OR ORGANIZATION WITHOUT THE PRIOR WRITTEN CONSENT OF HURCO MANUFACTURING COMPANY, INC.

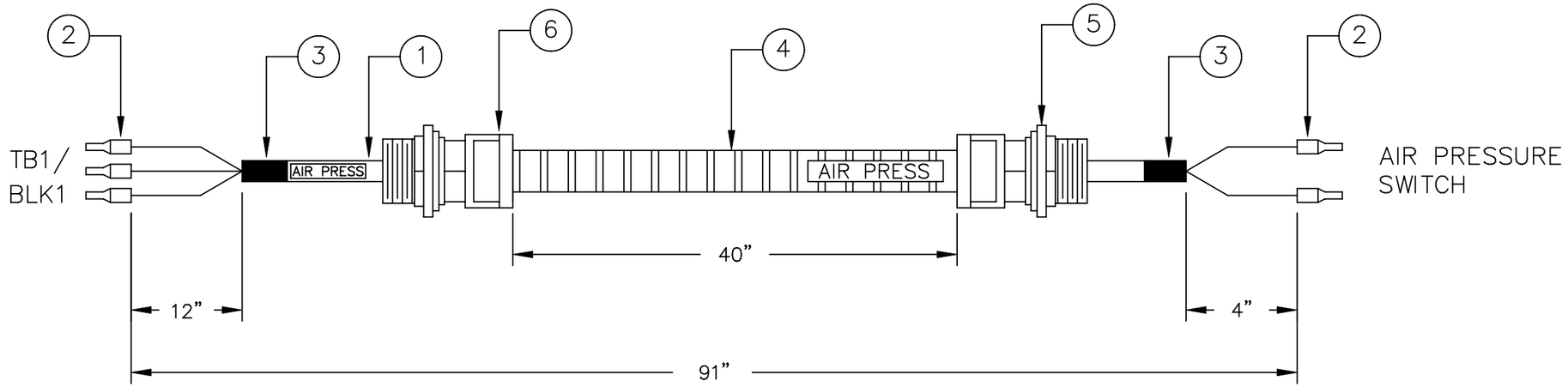


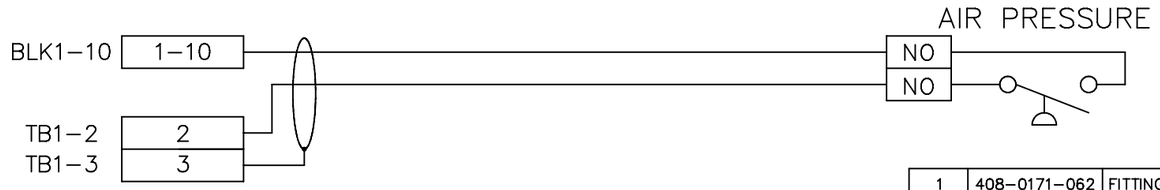


NOTES:
1. MARK HARNESS WITH HURCO PART NUMBER AND REVISION.
2. OVERALL DIMENSION IS STRAIGHT LINE LENGTH OF HARNESS, ±1".
3. LABEL CONNECTORS AS SHOWN.

PARTS LIST

| QTY. | PART NUMBER | ITEM DESCRIPTION | ITEM |
|---|---|---|---|
| 1 | 408-0171-062 | FITTING, PG9 | 6 |
| 1 | 408-0171-080 | FITTING, PG13.5 CONDUIT 5/16" | 5 |
| 40" | 408-0171-057 | CONDUIT, 5/16" BLACK, FLEXIBLE | 4 |
| 2" | 406-6481-004 | HEATSHRINK, 1/4" BLACK | 3 |
| 5 | 406-0965-014 | FERRULE, 24AWG LT YELLOW | 2 |
| 91" | 406-1245-007 | CABLE, 2/COND 24AWG SHLD | 1 |

| REV | P.I.N. NO. | REVISION DESCRIPTION | REV BY | DATE | CHK BY | DATE | APPD BY | DATE | DF |
|---|---|---|---|---|---|---|---|---|---|
| A | 15352 | RELEASE | | | | | | | |

SURFACE TREATMENT ~

HEAT TREATMENT ~

FIRST USED ON VM1

EXCEPT AS NOTED: ALL CORNERS MUST BE AS FOLLOWS
INSIDE: .050" X 45° OR .05" R MAX
OUTSIDE: .030" X 45° OR .05" R

EXCEPT AS NOTED: WELDING TOLERANCE MUST BE AS FOLLOWS ±.12

EXCEPT AS NOTED: ALL DIMENSIONS IN INCHES TOLERANCE
DECIMAL
.0 ±.0300
.00 ±.0150
.000 ±.0050
.0000 ±.0005
ANGULAR ± 0°30'

THIRD ANGLE PROJECTION

HURCO MANUFACTURING COMPANY, INC.
INDIANAPOLIS, IN U.S.A.

DESCRIPTION: HARNESS, AIR PRESSURE

| DRAWN | DATE | CHECKED | DATE | APPROVED | DATE |
|---|---|---|---|---|---|
| ROD | 3-13-02 | | | | |

| SCALE | SIZE | DRAWING | SHT. | REV. |
|---|---|---|---|---|
| NONE | B | 423-4401-741 | 1 OF 1 | A |

UNIT OF MEAS: EA.

| SIZE | DRAWING | SHT. | REV. |
|---|---|---|---|
| C | 423-4401-749 | 1 OF 1 | A |

PROPRIETARY INFORMATION
INFORMATION CONTAINED HEREIN IS THE PROPERTY OF HURCO MANUFACTURING COMPANY, INC. NO REPRODUCTION OR DISCLOSURE OF THIS INFORMATION SHALL BE MADE BY THE RECIPIENT TO ANY OTHER PERSON OR ORGANIZATION WITHOUT THE PRIOR WRITTEN CONSENT OF HURCO MANUFACTURING COMPANY, INC.

4Ra=S
Ra
32–125
8.0–25
2.0–6.3
0.25–1.6
0.07–0.2

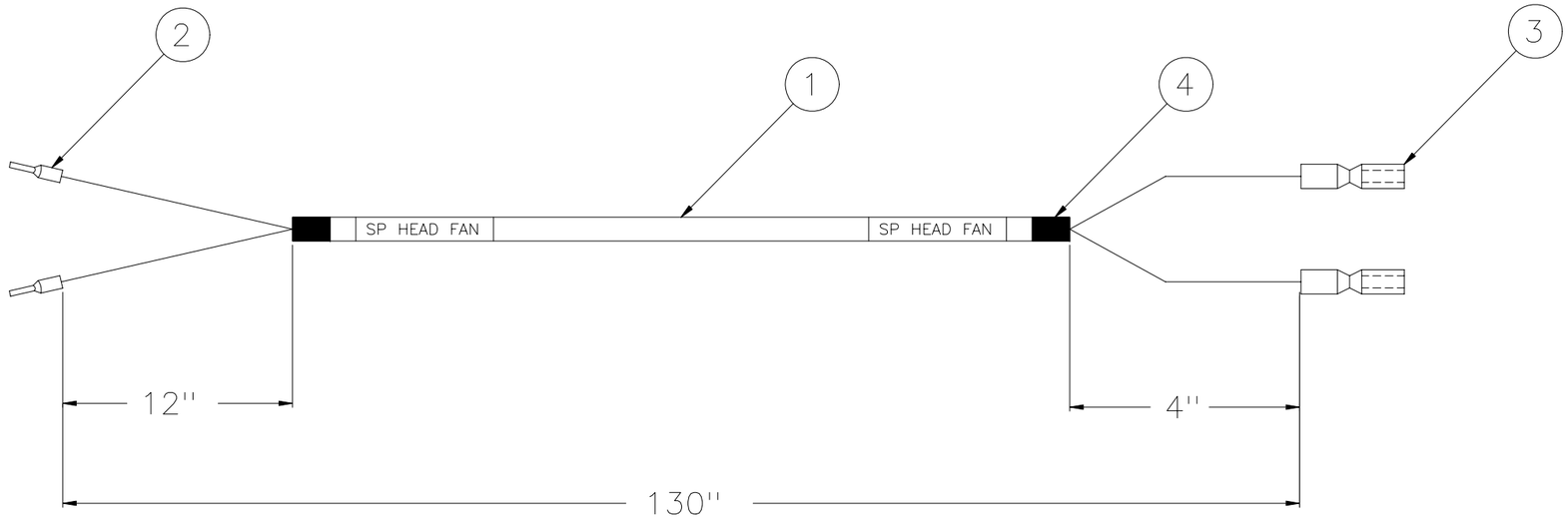


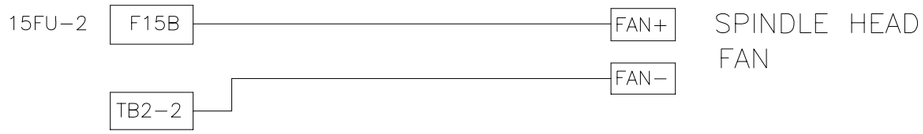


| QTY. | PART NUMBER | ITEM DESCRIPTION | ITEM |
|---|---|---|---|
| 2'' | 406-6481-004 | HEATSHRINK 1/4'' BLACK | 4 |
| 2 | 406-0802-098 | SOCKET PV1.25–A | 3 |
| 2 | 406-0965-003 | FERRULE, 18AWG | 2 |
| 130'' | 406-1247-063 | CABLE 2–COND 18AWG | 1 |

PARTS LIST

| REV | E.C.N. NO. | REVISION DESCRIPTION | REV BY | DATE | CHK BY | DATE | APPD BY | DATE | DF |
|---|---|---|---|---|---|---|---|---|---|
| A | 15352 | REL | | | | | | | |

SURFACE TREATMENT

HEAT TREATMENT

FIRST USED ON
VM1

EXCEPT AS NOTED: ALL CORNERS MUST BE AS FOLLOWS
INSIDE: 1.3 X 45° OR 1.3 R MAX
OUTSIDE: 0.8 X 45° OR 1.3 R

EXCEPT AS NOTED: WELDING TOLERANCE MUST BE AS FOLLOWS ±3

EXCEPT AS NOTED: ALL DIMENSIONS IN METRIC TOLERANCE
DECIMAL
.0 ±0.8
.00 ±0.4
.000 ±0.13
.0000 ±0.013
ANGULAR ± 0°30'

THIRD ANGLE PROJECTION

HURCO MANUFACTURING COMPANY, INC.
INDIANAPOLIS, IN U.S.A.

DESCRIPTION: HARNESS, SPINDLE HEAD FAN

| DRAWN | DATE | CHECKED | DATE | APPROVED | DATE |
|---|---|---|---|---|---|
| ROD | 5-8-02 | | | | |

| SCALE | SIZE | DRAWING | SHT. | REV. |
|---|---|---|---|---|
| NONE | C | 423-4401-749 | 1 OF 1 | A |

UNIT OF MEAS. EA

# Harness, Auger Control, Prepare, 423-4401-750—Rev. B

| SIZE | DRAWING | SHT. | REV. |
|---|---|---|---|
| C | 423-4401-750 | 1 OF 1 | B |

PROPRIETARY INFORMATION
INFORMATION CONTAINED HEREIN IS THE PROPERTY OF HURCO MANUFACTURING COMPANY, INC. NO REPRODUCTION OR DISCLOSURE OF THIS INFORMATION SHALL BE MADE BY THE RECIPIENT TO ANY OTHER PERSON OR ORGANIZATION WITHOUT THE PRIOR WRITTEN CONSENT OF HURCO MANUFACTURING COMPANY, INC.

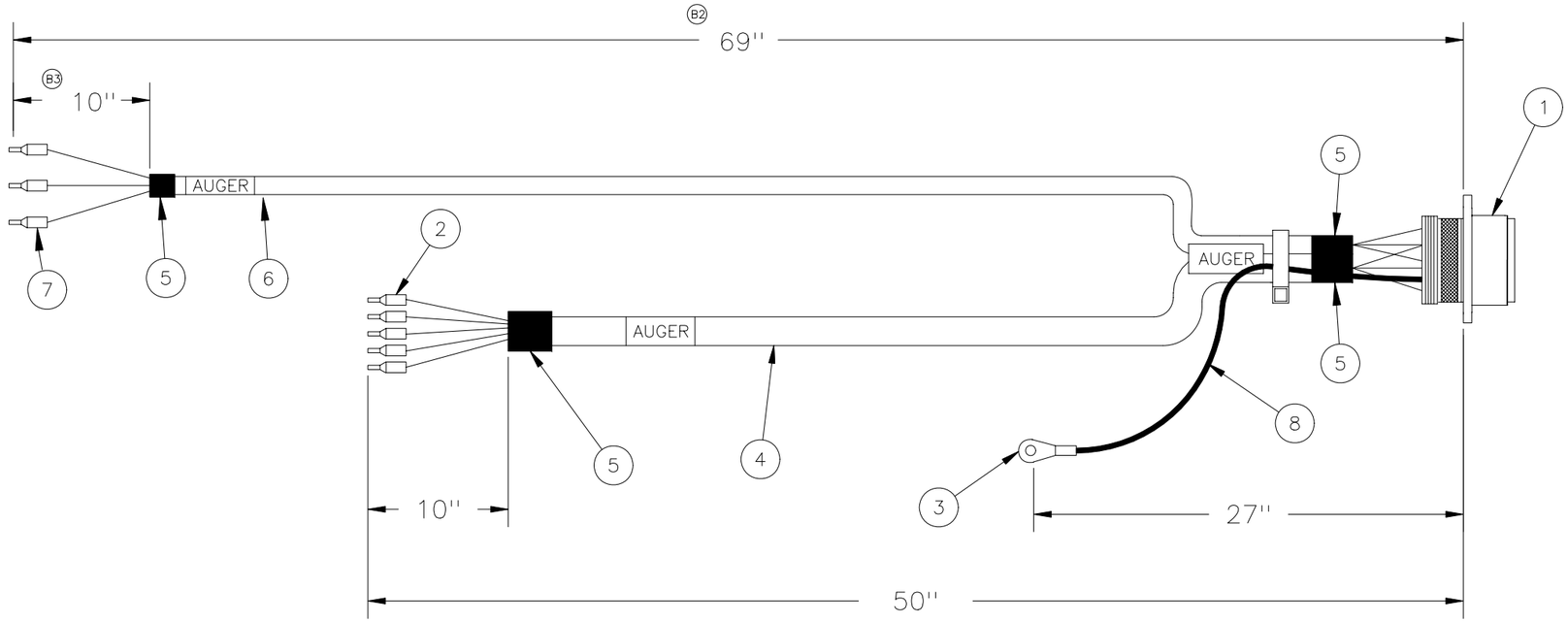


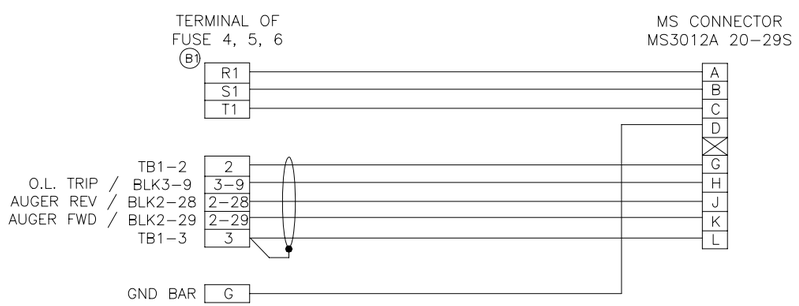


NOTES:

1. APPLY ITEM 2, RTV-732 SEALANT MATERIAL TO POT THE MS CONNECTOR.
2. LABEL CABLE WITH REFERENCE DESIGNATORS SHOWN.
3. DIMENSIONS REFER TO STRAIGHT-LINE LENGTH, TOLERANCE +/-1/2''.
4. FINISHED ASSEMBLY TO BE MARKED WITH TH HURCO PART NUMBER AND REVISION LETTER.
5. LABEL TB-R END CONDUCTORS WITH NUMBERED I.D. BANDS (SHIELDS EXCEPTED)

PARTS LIST

| QTY. | U.O.M. | PART NUMBER | ITEM DESCRIPTION | ITEM |
|---|---|---|---|---|
| 27'' | | 406-1241-010 | CABLE, 16AWG, 1-COND | 8 |
| 3 | | 406-0965-005 | FERRULE, 16AWG | 7 |
| B2 69'' | | 406-1247-082 | CABLE, 16GA, 4-COND, UNSHLD | 6 |
| 6'' | | 406-6481-004 | SHRINK TUBE, 1/4'' BLACK | 5 |
| 50'' | | 406-1242-021 | CABLE, 22GA, 4-COND, SHLD | 4 |
| 1 | | 780-0002-021 | RING TONGUE, 1.25-5R | 3 |
| 4 | | 406-0965-013 | FERRULE, 22AWG LIGHT GREEN | 2 |
| 1 | | 408-1131-002 | RECEPTACLE, WALL MOUNT, MS 17 CONTACTS | 1 |

| REV | ECN NO. | REVISION DESCRIPTION | REV BY | DATE | CHK BY | DATE | APP'D BY | DATE | DF |
|---|---|---|---|---|---|---|---|---|---|
| B | 15540 | 1) LABEL WAS F4B, F5B, F6B; 2) WAS 84''; 3) WAS 4''. | ROD | 27 MAR 03 | | | | | |
| A | 15352 | ORIGINAL RELEASE | | | | | | | |

SURFACE TREATMENT ~

HEAT TREATMENT ~

FIRST USED ON VM1

EXCEPT AS NOTED: ALL DIMENSIONS IN INCHES TOLERANCE
DECIMAL
.0 ±.0300
.00 ±.0150
.000 ±.0050
.0000 ±.0005
ANGULAR ± 0°30'
BREAK ALL SHARP EDGES

THIRD ANGLE PROJECTION

HURCO MANUFACTURING COMPANY, INC.
INDIANAPOLIS, IN U.S.A.

DESCRIPTION: HARNESS, AUGER CONTROL, PREPARE

| DRAWN | DATE | CHECKED | DATE | APPROVED | DATE |
|---|---|---|---|---|---|
| ROD | 3-13-02 | | | | |

| SCALE | SIZE | DRAWING | SHT. | REV. |
|---|---|---|---|---|
| NONE | C | 423-4401-750 | 1 OF 1 | B |

UNIT OF MEAS: NONE

| SIZE | DRAWING | SHT. | REV. |
|---|---|---|---|
| C | 423-4401-751 | 1 OF 1 | B |

PROPRIETARY INFORMATION

INFORMATION CONTAINED HEREIN IS THE PROPERTY OF HURCO MANUFACTURING COMPANY, INC. NO REPRODUCTION OR DISCLOSURE OF THIS INFORMATION SHALL BE MADE BY THE RECIPIENT TO ANY OTHER PERSON OR ORGANIZATION WITHOUT THE PRIOR WRITTEN CONSENT OF HURCO MANUFACTURING COMPANY, INC.

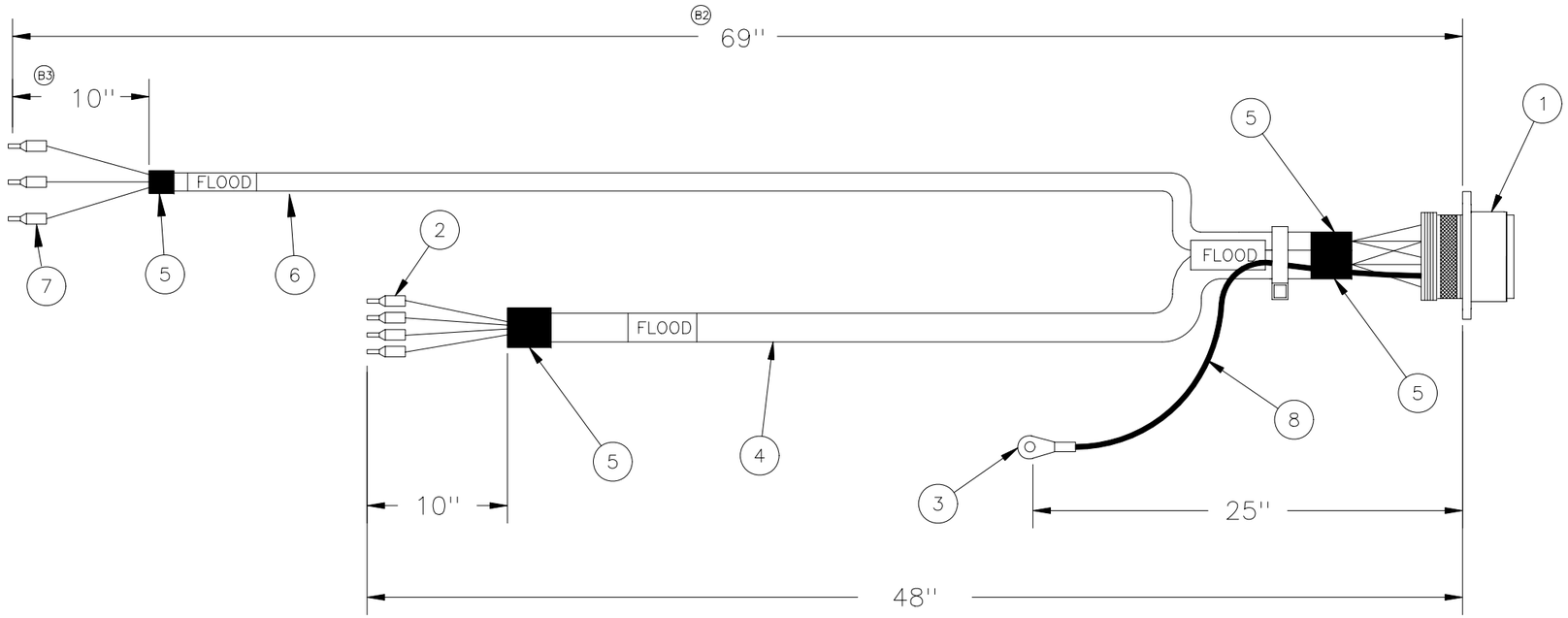


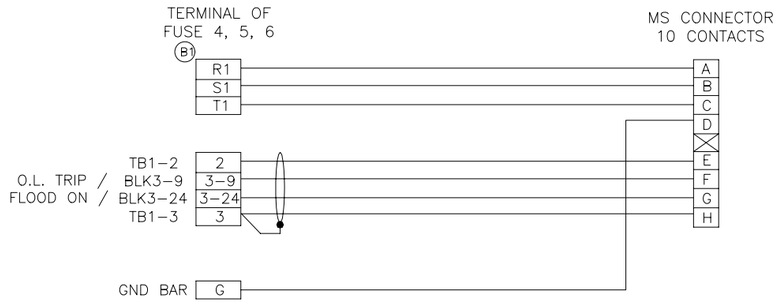


NOTES:

1. APPLY ITEM 2, RTV-732 SEALANT MATERIAL TO POT THE MS CONNECTOR.
2. LABEL CABLE WITH REFERENCE DESIGNATORS SHOWN.
3. DIMENSIONS REFER TO STRAIGHT-LINE LENGTH, TOLERANCE +/-1/2''.
4. FINISHED ASSEMBLY TO BE MARKED WITH TH HURCO PART NUMBER AND REVISION LETTER.
5. LABEL TB-R END CONDUCTORS WITH NUMBERED I.D. BANDS (SHIELDS EXCEPTED)

| QTY. | U.O.M. | PART NUMBER | ITEM DESCRIPTION | ITEM |
|---|---|---|---|---|
| 25'' | | 406-1241-010 | CABLE, 16AWG, 1-COND | 8 |
| 3 | | 406-0965-005 | FERRULE, 16AWG | 7 |
| (B2) 69'' | | 406-1247-082 | CABLE, 16GA, 4-COND, UNSHLD | 6 |
| 6'' | | 406-6481-004 | SHRINK TUBE, 1/4'' BLACK | 5 |
| 48'' | | 406-1242-021 | CABLE, 22GA, 4-COND, SHLD | 4 |
| 1 | | 780-0002-021 | RING TONGUE, 1.25-5R | 3 |
| 4 | | 406-0965-013 | FERRULE, 22AWG LIGHT GREEN | 2 |
| 1 | | 408-1131-004 | RECEPTACLE, WALL MOUNT (MS3102A 18-1S) | 1 |

PARTS LIST

| REV | ECN NO. | REVISION DESCRIPTION | REV BY | DATE | CHK BY | DATE | APPD BY | DATE | DF |
|---|---|---|---|---|---|---|---|---|---|
| B | 15540 | 1) LABEL WAS F4B, F5B, F6B; 2) WAS 81''; 3) WAS 10''. | ROD | 27 MAR 03 | | | | | |
| A | 15352 | ORIGINAL RELEASE | | | | | | | |

SURFACE TREATMENT

HEAT TREATMENT

FIRST USED ON VM1

EXCEPT AS NOTED: ALL DIMENSIONS IN INCHES TOLERANCE
DECIMAL
.0 ±.0300
.00 ±.0150
.000 ±.0050
.0000 ±.0005
ANGULAR ± 0°30'
BREAK ALL SHARP EDGES

THIRD ANGLE PROJECTION

HURCO MANUFACTURING COMPANY, INC.
INDIANAPOLIS, IN U.S.A.

DESCRIPTION: HARNESS, FLOOD CONTROL, PREPARE

| DRAWN | DATE | CHECKED | DATE | APPROVED | DATE |
|---|---|---|---|---|---|
| ROD | 3-13-02 | | | | |

| SCALE | SIZE | DRAWING | SHT. | REV. |
|---|---|---|---|---|
| NONE | C | 423-4401-751 | 1 OF 1 | B |

UNIT OF MEAS: NONE

| SIZE | DRAWING | SHT. | REV. | PROPRIETARY INFORMATION |
|---|---|---|---|---|
| C | 423-4401-752 | 1 OF 1 | A | INFORMATION CONTAINED HEREIN IS THE PROPERTY OF HURCO MANUFACTURING COMPANY, INC. NO REPRODUCTION OR DISCLOSURE OF THIS INFORMATION SHALL BE MADE BY THE RECIPIENT TO ANY OTHER PERSON OR ORGANIZATION WITHOUT THE PRIOR WRITTEN CONSENT OF HURCO MANUFACTURING COMPANY, INC. |

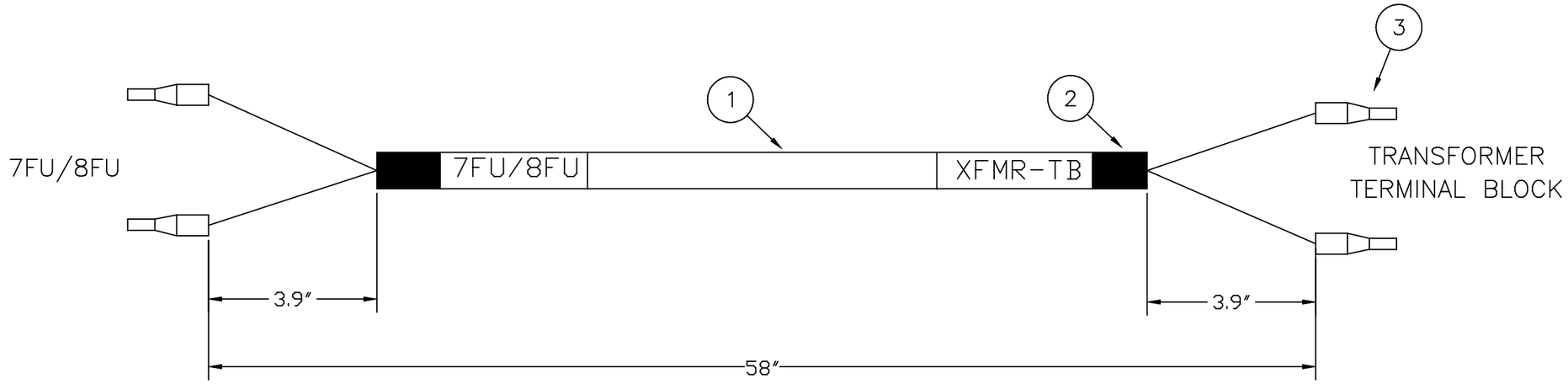


TRANSFORMER TB
PRIMARY

| | |
|---|---|
| F7B | 230V |
| F8B | 0V |

NOTES

1. MARK HARNESS WITH HURCO PART NUMBER AND REVISION.
2. OVERALL DIMENSION IS STRAIGHT LINE LENGTH OF HARNESS +/-1″.
3. LABEL CABLE AS SHOWN.

PARTS LIST

| QTY. | PART NUMBER | ITEM DESCRIPTION | ITEM |
|---|---|---|---|
| 4 | 406-0965-006 | FERRULE, 2.0SQMM | 3 |
| 2″ | 406-6481-004 | HEATSHRINK, 1/4″ BLACK | 2 |
| 58″ | 406-1247-099 | CABLE, 2/C, 2.0SQMM, 105 DEG C | 1 |

| REV | E.C.N. NO. | REVISION DESCRIPTION | REV BY | DATE | CHK BY | DATE | APP'D BY | DATE | DF |
|---|---|---|---|---|---|---|---|---|---|
| A | 15352 | RELEASE | | | | | | | |

SURFACE TREATMENT

HEAT TREATMENT

FIRST USED ON: VM1

EXCEPT AS NOTED: ALL DIMENSIONS IN INCHES
TOLERANCE
DECIMAL
.0 ±.0300
.00 ±.0150
.000 ±.0050
.0000 ±.0005
ANGULAR ± 0°30′
BREAK ALL SHARP EDGES

THIRD ANGLE PROJECTION

HURCO MANUFACTURING COMPANY, INC.
INDIANAPOLIS, IN U.S.A.

DESCRIPTION: HARNESS, TRANSFORMER 230V PRIMARY

| DRAWN | DATE | CHECKED | DATE | APPROVED | DATE |
|---|---|---|---|---|---|
| ROD | 5-6-02 | | | | |

| SCALE | SIZE | DRAWING | SHT. | REV. |
|---|---|---|---|---|
| NONE | C | 423-4401-752 | 1 OF 1 | A |

UNIT OF MEAS: PC

| SIZE | DRAWING | SHT. | REV. | PROPRIETARY INFORMATION |
|---|---|---|---|---|
| C | 423-4401-753 -754 -755 | 1 OF 1 | A | INFORMATION CONTAINED HEREIN IS THE PROPERTY OF HURCO MANUFACTURING COMPANY, INC. NO REPRODUCTION OR DISCLOSURE OF THIS INFORMATION SHALL BE MADE BY THE RECIPIENT TO ANY OTHER PERSON OR ORGANIZATION WITHOUT THE PRIOR WRITTEN CONSENT OF HURCO MANUFACTURING COMPANY, INC. |

| DIM. | Z AXIS (-755) | Y AXIS (-754) | X AXIS (-753) |
|---|---|---|---|
| A | 67" | 101" | 105" |
| B | 130" | 174" | 177" |

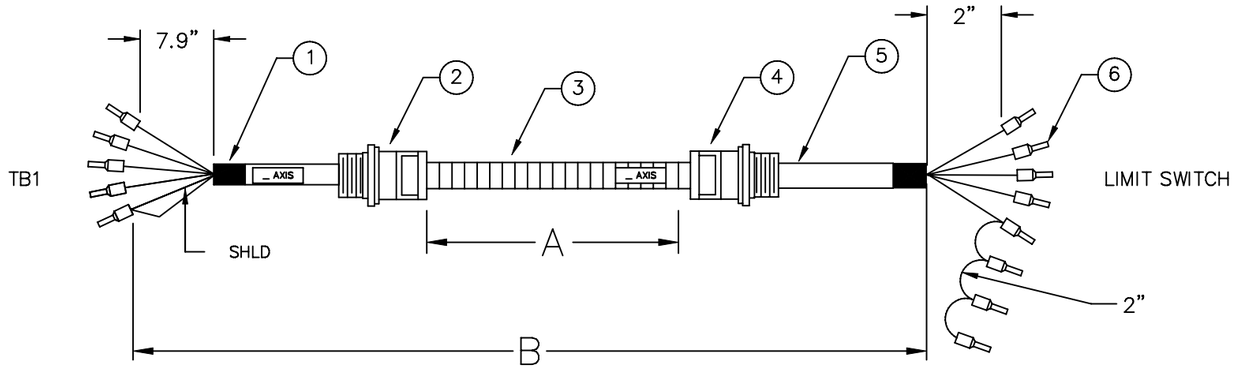


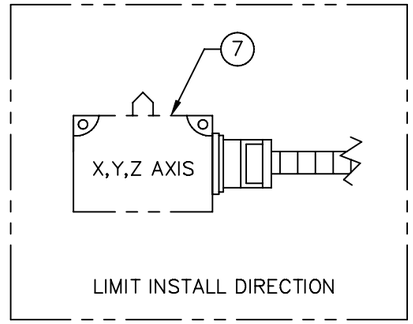


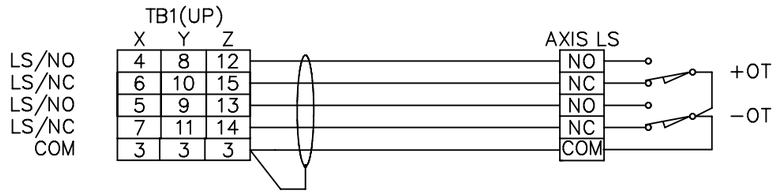


NOTES:
1. MARK HARNESS WITH HURCO PART NUMBER AND REVISION.
2. OVERALL DIMENSION IS STRAIGHT LINE LENGTH OF HARNESS, +1".
3. LABEL CABLE AS SHOWN.

| QTY. -755 Z-AXIS | QTY. -754 Y-AXIS | QTY. -753 X-AXIS | PART NUMBER | ITEM DESCRIPTION | ITEM |
|---|---|---|---|---|---|
| 1 REF | 1 REF | 1 REF | 404-5202-021 | LIMIT SWITCH, 2- PLUNGER | 7 |
| 13 | 13 | 13 | 406-0965-014 | FERRULE, 24AWG LT YELLOW | 6 |
| 130" | 174" | 177" | 406-1325-008 | CABLE, 5/COND 24AWG SHLD | 5 |
| 1 | 1 | 1 | 408-0171-074 | FITTING, PR7-11 CONDUIT | 4 |
| 67" | 101" | 105" | 408-0171-058 | CONDUIT, 1/4" BLACK FLEXIBLE | 3 |
| – | 1 | 1 | 408-0171-063 | FITTING, PG7 CONDUIT | 2 |
| 2" | 2" | 2" | 406-6481-003 | HEAT SHRINK, 3/16" BLACK | 1 |

PARTS LIST

| REV | P.I.N. NO. | REVISION DESCRIPTION | REV BY | DATE | CHK BY | DATE | APPD BY | DATE | DF |
|---|---|---|---|---|---|---|---|---|---|
| A | 15352 | RELEASE | | | | | | | |

SURFACE TREATMENT ~

HEAT TREATMENT ~

FIRST USED ON VM1

EXCEPT AS NOTED: ALL CORNERS MUST BE AS FOLLOWS
INSIDE: .050" X 45° OR .05" R MAX
OUTSIDE: .030" X 45° OR .05" R

EXCEPT AS NOTED: WELDING TOLERANCE MUST BE AS FOLLOWS ±.12

EXCEPT AS NOTED: ALL DIMENSIONS IN INCHES TOLERANCE
DECIMAL .0 ±.0300, .00 ±.0150, .000 ±.0050, .0000 ±.0005
ANGULAR ± 0°30'

THIRD ANGLE PROJECTION

HURCO MANUFACTURING COMPANY, INC.
INDIANAPOLIS, IN U.S.A.

DESCRIPTION: HARNESS, AXIS LIMIT SWITCH VM1

| DRAWN | DATE | CHECKED | DATE | APPROVED | DATE |
|---|---|---|---|---|---|
| ROD | 3-11-02 | | | | |

| SCALE | SIZE | DRAWING | SHT. | REV. |
|---|---|---|---|---|
| NONE | C | 423-4401-753 -754 -755 | 1 OF 1 | A |

UNIT OF MEAS.: EA

| SIZE | DRAWING | SHT. | REV. |
|---|---|---|---|
| C | 423-4401-756 -757 -758 | 1 OF 1 | A |

PROPRIETARY INFORMATION
INFORMATION CONTAINED HEREIN IS THE PROPERTY OF HURCO MANUFACTURING COMPANY, INC. NO REPRODUCTION OR DISCLOSURE OF THIS INFORMATION SHALL BE MADE BY THE RECIPIENT TO ANY OTHER PERSON OR ORGANIZATION WITHOUT THE PRIOR WRITTEN CONSENT OF HURCO MANUFACTURING COMPANY, INC.

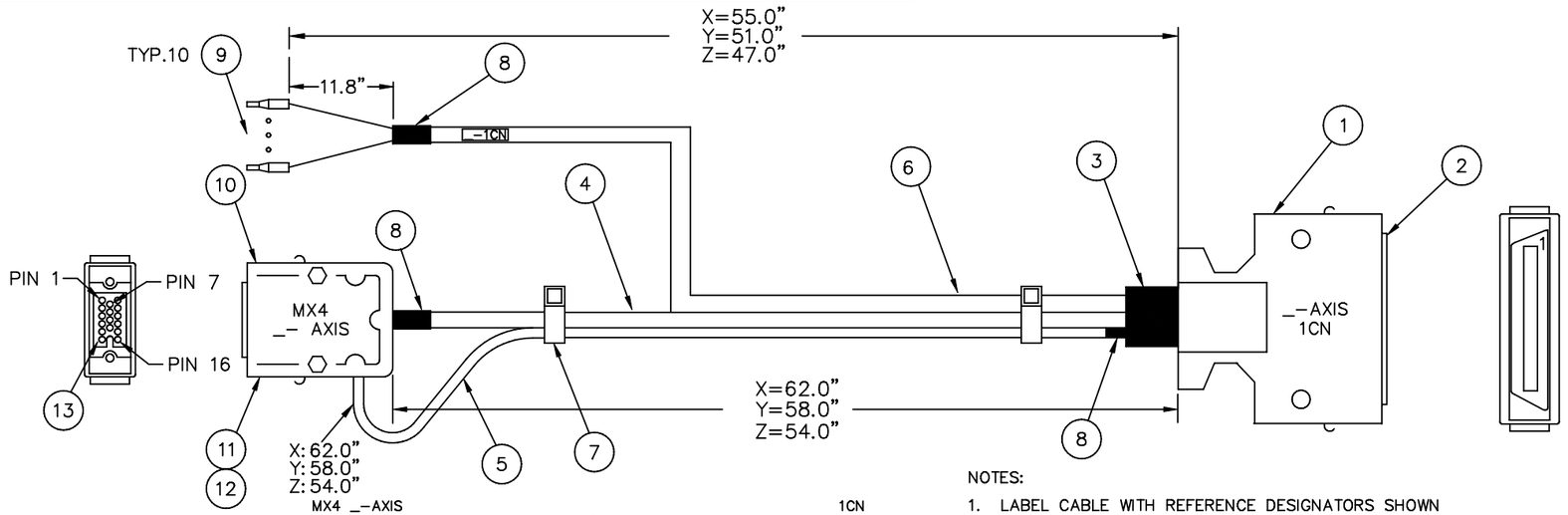


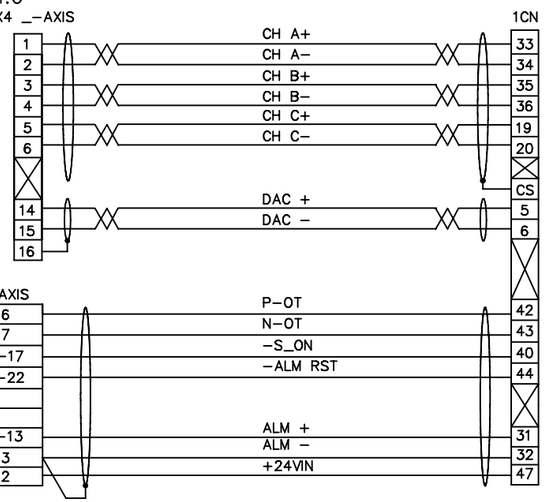


| | Z-AXIS | Y-AXIS | X-AXIS |
|---|---|---|---|
| TB1 | 14 | 10 | 6 |
| TB1 | 15 | 11 | 7 |
| BLK2 | 2-19 | 2-18 | 2-17 |
| BLK2 | 2-24 | 2-23 | 2-22 |
| | | | |
| | | | |
| BLK1 | 1-15 | 1-14 | 1-13 |
| TB1 | 3 | 3 | 3 |
| TB1 | 2 | 2 | 2 |

NOTES:
1. LABEL CABLE WITH REFERENCE DESIGNATORS SHOWN
2. DIMENSIONS REFER TO STRAIGHT-LINE LENGTH, TOLERANCE +/-1/2".
3. FINISHED ASSEMBLY TO BE MARKED WITH THE HURCO PART NUMBER AND REVISION LETTER.
4. USE 1/2" OF 3/32" HEAT SHRINK TUBING ON EACH TERMINAL OF 1CN CONNECTOR
5. LABEL TB-R END CONDUCTORS WITH NUMBERED I.D. BANDS (SHIELDS EXCEPTED).
6. CS = CONNECTOR SHELL SHIELD TERMINAL

PARTS LIST

| QTY. -758 Z-AXIS | QTY. -757 Y-AXIS | QTY. -756 X-AXIS | PART NUMBER | ITEM DESCRIPTION | ITEM |
|---|---|---|---|---|---|
| 7" | 7" | 7" | 406-6481-015 | HEAT SHRINK, 3/32" BLACK | 13 |
| 16 | 16 | 16 | 406-0811-008 | CONTACT, MALE SILVER | 12 |
| 1 | 1 | 1 | 406-0811-019 | INSULATOR, 16-POS MALE | 11 |
| 1 | 1 | 1 | 406-0811-002 | CASE, VERT/HORZ 16-POS | 10 |
| 10 | 10 | 10 | 406-0965-014 | FERRULE, 24AWG LIGHT YELLOW | 9 |
| 4" | 4" | 4" | 406-6481-004 | HEATSHRINK, 1/4" BLACK | 8 |
| 2 | 2 | 2 | 406-5001-003 | TIE WRAP SMALL | 7 |
| 47.0" | 51.0" | 55.0" | 406-1245-004 | CABLE, 24GA, 10-COND, SHLD | 6 |
| 54.0" | 58.0" | 62.0" | 406-1247-094 | CABLE, 24GA, 1 TW/PR, SHLD | 5 |
| 54.0" | 58.0" | 62.0" | 406-1328-006 | CABLE, 24GA, 4 TW/PR, SHLD | 4 |
| 2" | 2" | 2" | 406-6481-006 | HEATSHRINK, 1/2" BLACK | 3 |
| 1 | 1 | 1 | 406-0802-079 | CONNECTOR, 10150-3000VE (3M) | 2 |
| 1 | 1 | 1 | 406-0802-080 | CASE, 10350-52A0-008 (3M) | 1 |

| REV | P.I.N. NO. | REVISION DESCRIPTION | REV BY | DATE | CHK BY | DATE | APPD BY | DATE | DF |
|---|---|---|---|---|---|---|---|---|---|
| A | 15352 | RELEASE | | | | | | | |

SURFACE TREATMENT

HEAT TREATMENT

FIRST USED ON: VM1

EXCEPT AS NOTED: ALL DIMENSIONS IN INCHES
TOLERANCE DECIMAL
.0 ±.0300
.00 ±.0150
.000 ±.0050
.0000 ±.0005
ANGULAR ± 0°30'

THIRD ANGLE PROJECTION

HURCO MANUFACTURING COMPANY, INC.
INDIANAPOLIS, IN U.S.A.

DESCRIPTION: HARNESS, X Y Z AXIS, 1CN TO MX4/TB1

| DRAWN | DATE | CHECKED | DATE | APPROVED | DATE |
|---|---|---|---|---|---|
| ROD | 3-11-02 | | | | |

| SCALE | SIZE | DRAWING | SHT. | REV. |
|---|---|---|---|---|
| NONE | C | 423-4401-756 -757 -758 | 1 OF 1 | A |

UNIT OF MEAS: EA

| SIZE | DRAWING | SHT. | REV. | PROPRIETARY INFORMATION |
|---|---|---|---|---|
| C | 423-4401-759 | 1 OF 1 | A | INFORMATION CONTAINED HEREIN IS THE PROPERTY OF HURCO MANUFACTURING COMPANY, INC. NO REPRODUCTION OR DISCLOSURE OF THIS INFORMATION SHALL BE MADE BY THE RECIPIENT TO ANY OTHER PERSON OR ORGANIZATION WITHOUT THE PRIOR WRITTEN CONSENT OF HURCO MANUFACTURING COMPANY, INC. |

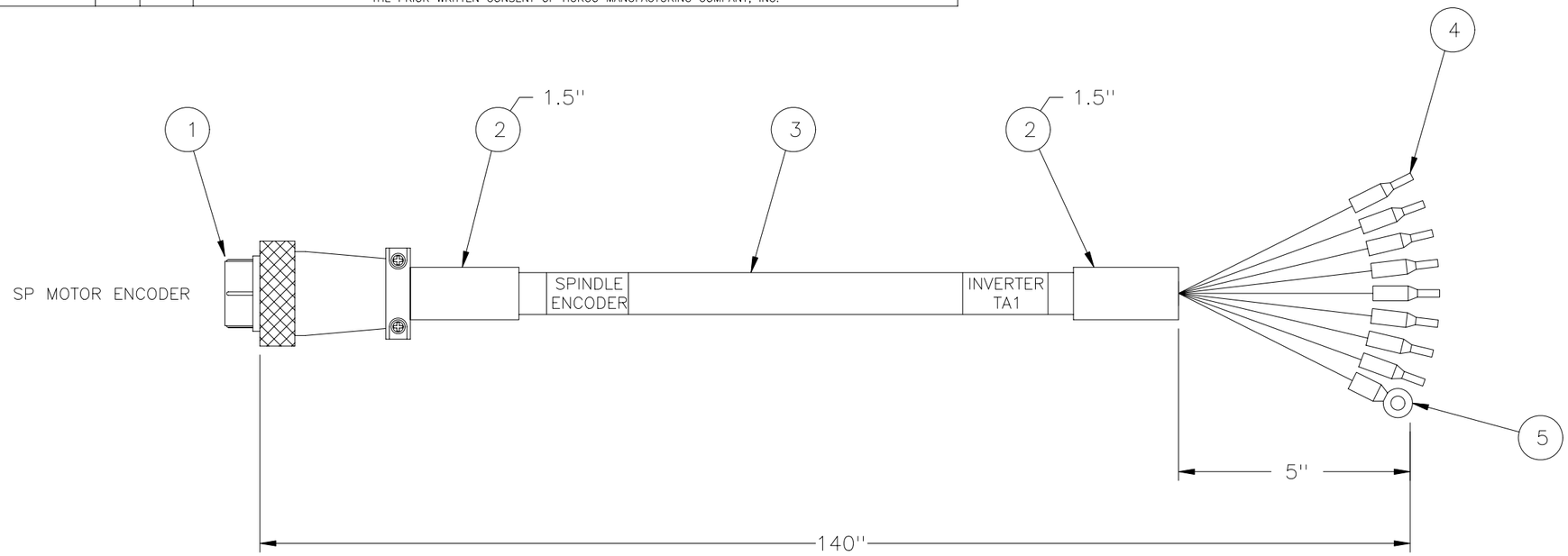


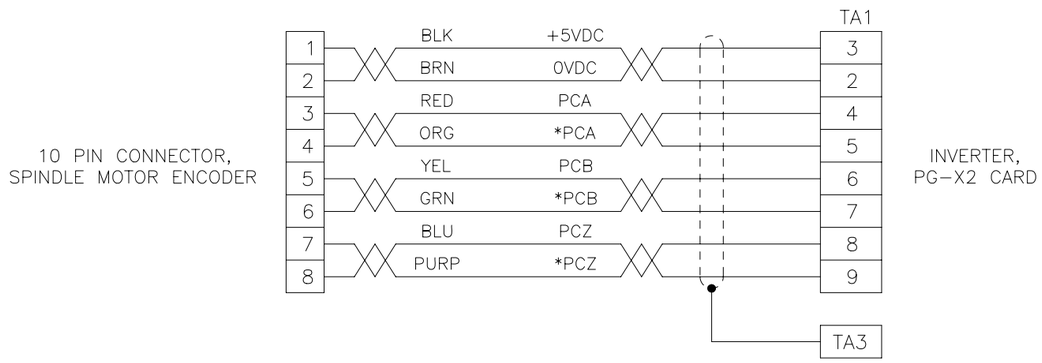


NOTE:
1) DIMENSIONS ARE SHOWN AS INCHES [MILLIMETERS].
2) ITEM #1 ENCODER CONNECTER FURNISHED WITH SPINDLE MOTOR
3) WIRE COLORS ARE AT VENDOR DISCRETION, COLORS SHOWN ARE ONLY SUGGESTED.

PARTS LIST

| QTY. | PART NUMBER | ITEM DESCRIPTION | ITEM |
|---|---|---|---|
| 1 | 406-7001-025 | RING TONGUE, #6, 26-22AWG (1.25-3R) | 5 |
| 8 | 406-0965-013 | FERRULE, 22AWG LT ORANGE | 4 |
| 140'' | 406-1328-004 | CABLE, 22AWG, 4 TW/PR, SHIELD | 3 |
| 3'' | 780-0003-003 | HEATSHRINK, 8MM DIA | 2 |
| 1 | 406-0321-049 | CONNECTOR, PLS-24-PF | 1 |

| REV | P.I.N. NO. | REVISION DESCRIPTION | REV BY | DATE | CHK BY | DATE | APPD BY | DATE | DF |
|---|---|---|---|---|---|---|---|---|---|
| A | 15352 | REL | | | | | | | |

SURFACE TREATMENT
HEAT TREATMENT
FIRST USED ON VM1

EXCEPT AS NOTED: ALL CORNERS MUST BE AS FOLLOWS
INSIDE: 1.3 X 45° OR 1.3 R MAX
OUTSIDE: 0.8 X 45° OR 1.3 R

EXCEPT AS NOTED: WELDING TOLERANCE MUST BE AS FOLLOWS ±3

EXCEPT AS NOTED: ALL DIMENSIONS IN METRIC TOLERANCE
DECIMAL .0 ±0.8, .00 ±0.4, .000 ±0.13, .0000 ±0.013
ANGULAR ± 0°30'

THIRD ANGLE PROJECTION

HURCO MANUFACTURING COMPANY, INC.
INDIANAPOLIS, IN U.S.A.

DESCRIPTION: HARNESS, SPINDLE MOTOR ENCODER

| DRAWN | DATE | CHECKED | DATE | APPROVED | DATE |
|---|---|---|---|---|---|
| ROD | 3-12-02 | | | | |

| SCALE | SIZE | DRAWING | SHT. | REV. |
|---|---|---|---|---|
| NONE | C | 423-4401-759 | 1 OF 1 | A |

UNIT OF MEAS. EA

| SIZE | DRAWING | SHT. | REV. |
|---|---|---|---|
| C | 423-4401-760<br>423-4401-761 | 1 OF 1 | A |

PROPRIETARY INFORMATION
INFORMATION CONTAINED HEREIN IS THE PROPERTY OF HURCO MANUFACTURING COMPANY, INC. NO REPRODUCTION OR DISCLOSURE OF THIS INFORMATION SHALL BE MADE BY THE RECIPIENT TO ANY OTHER PERSON OR ORGANIZATION WITHOUT THE PRIOR WRITTEN CONSENT OF HURCO MANUFACTURING COMPANY, INC.

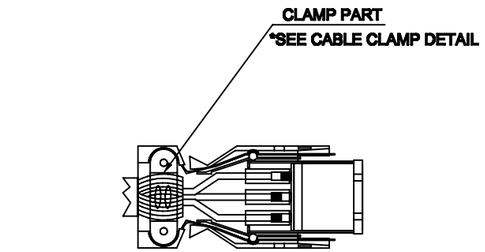


DETAIL A

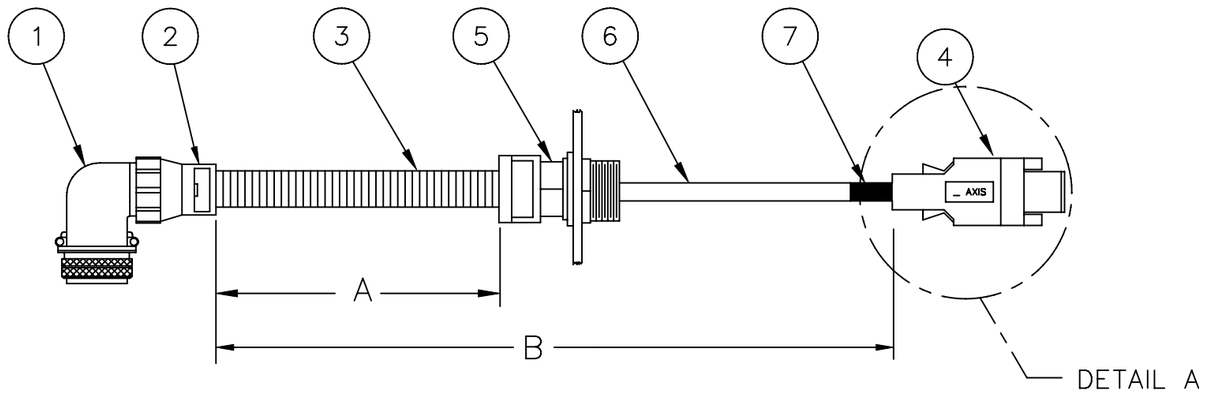


| DIM. | Y AXIS (-761) | X AXIS (-760) |
|---|---|---|
| A | 63" | 125" |
| B | 128" | 195" |

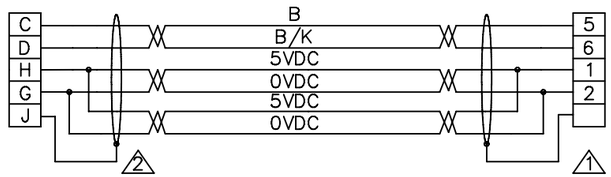


NOTE 1 CONNECT ALL SHIELD TO CONNECTOR SHELL. ITEM #4 FURNISHED WITH YASKAWA KIT.

NOTE 2 SOLIDER A 0.5SQMM AND UPWARD GREEN WIRE ON THE WINDED SHIELD AND PIN J

| QTY. -761 Y AXIS | QTY. -760 X AXIS | PART NUMBER | ITEM DESCRIPTION | ITEM |
|---|---|---|---|---|
| 2" | 2" | 780-0003-004 | HEATSHRINK, 10MM DIA | 7 |
| 128" | 195" | 406-1247-095 | CABLE, 3 PR SHIELDED, 24AWG | 6 |
| 1 | 1 | 408-0171-060 | FITTING, PG16 CONDUIT | 5 |
| 1 | 1 | 406-0801-211 | CONNECTOR, MOLEX | 4 |
| 63" | 125" | 408-0171-055 | CONDUIT, PG16 BLACK FLEXIBLE | 3 |
| 1 | 1 | 408-0171-065 | ADAPTER, 1 3/16"-18 - 16MM CONDUIT | 2 |
| 1 | 1 | 406-0321-018 | CONNECTOR, 90 DEG ANGLE (20-29S) | 1 |

PARTS LIST

| REV | E.C.N. NO. | REVISION DESCRIPTION | REV BY | DATE | CHK BY | DATE | APPD BY | DATE | DF |
|---|---|---|---|---|---|---|---|---|---|
| A | 15352 | RELEASE | | | | | | | |

SURFACE TREATMENT

HEAT TREATMENT

FIRST USED ON
VM1

EXCEPT AS NOTED:
ALL DIMENSIONS IN INCHES
TOLERANCE
DECIMAL
.0 ±.0300
.00 ±.0150
.000 ±.0050
.0000 ±.0005
ANGULAR ± 0°30'

THIRD ANGLE PROJECTION

HURCO MANUFACTURING COMPANY, INC.
INDIANAPOLIS, IN U.S.A.

DESCRIPTION
HARNESS, X, Y AXIS MOTOR ENCODER

| DRAWN | DATE | CHECKED | DATE | APPROVED | DATE |
|---|---|---|---|---|---|
| ROD | 3-12-02 | | | | |

| SCALE | SIZE | DRAWING | SHT. | REV. |
|---|---|---|---|---|
| NONE | C | 423-4401-760<br>423-4401-761 | 1 OF 1 | A |

UNIT OF MEAS.
EA

| SIZE | DRAWING | SHT. | REV. |
|---|---|---|---|
| C | 423-4401-762 | 1 OF 1 | B |

PROPRIETARY INFORMATION

INFORMATION CONTAINED HEREIN IS THE PROPERTY OF HURCO MANUFACTURING COMPANY, INC. NO REPRODUCTION OR DISCLOSURE OF THIS INFORMATION SHALL BE MADE BY THE RECIPIENT TO ANY OTHER PERSON OR ORGANIZATION WITHOUT THE PRIOR WRITTEN CONSENT OF HURCO MANUFACTURING COMPANY, INC.

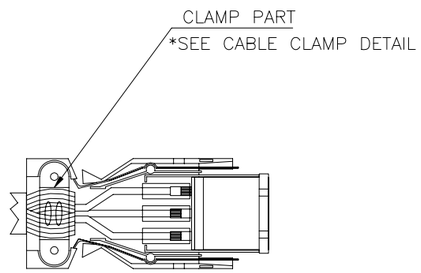


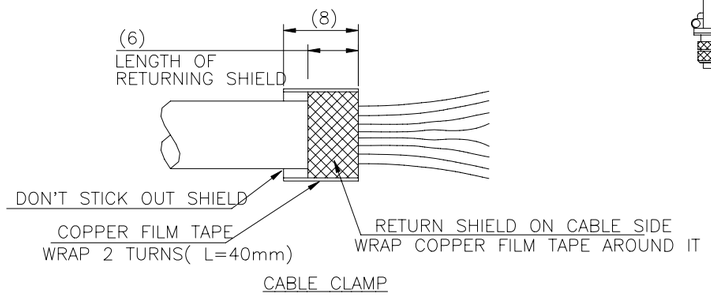


DETAIL A

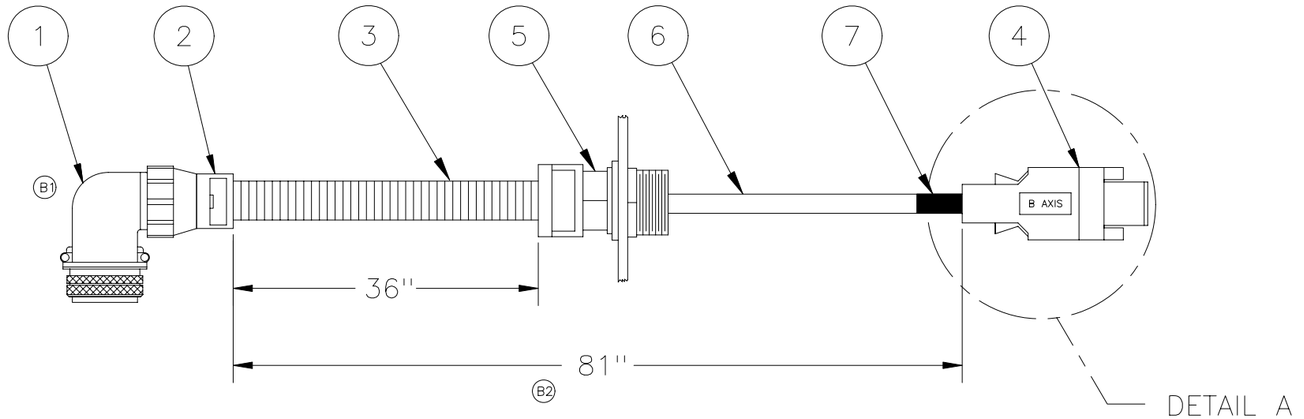


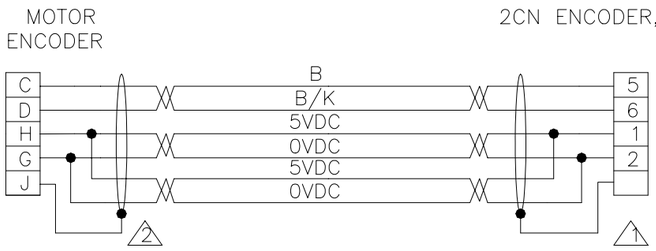


NOTE 1 CONNECT ALL SHIELD TO CONNECTOR SHELL.
ITEM #4 FURNISHED WITH YASKAWA KIT.

NOTE 2 SOLIDER A 0.5SQMM AND UPWARD GREEN WIRE ON THE WINDED SHIELD AND PIN J

| QTY. −762 Z AXIS | PART NUMBER | ITEM DESCRIPTION | ITEM |
|---|---|---|---|
| 2'' | 780-0003-004 | HEATSHRINK, 10MM DIA | 7 |
| B2 81'' | 406-1247-095 | CABLE, 3 PR SHIELDED, 24AWG | 6 |
| 1 | 408-0171-060 | FITTING, PG16 CONDUIT | 5 |
| 1 | 406-0801-211 | CONNECTOR, MOLEX | 4 |
| 36'' | 408-0171-055 | CONDUIT, PG16 BLACK FLEXIBLE | 3 |
| 1 | 408-0171-065 | ADAPTER, 1 3/16''-18 – 16MM CONDUIT | 2 |
| B1 1 | 406-0321-018 | CONNECTOR, 90 DEG ANGLE (20-29S) | 1 |

PARTS LIST

| REV | E.C.N. NO. | REVISION DESCRIPTION | REV BY | DATE | CHK BY | DATE | APPD BY | DATE | DF |
|---|---|---|---|---|---|---|---|---|---|
| B | 155401 | 1)WAS 406-0321-048; 2) WAS 77'' | ROD | 6 JAN 03 | | | | | |
| A | 153521 | RELEASE | | | | | | | |

SURFACE TREATMENT

HEAT TREATMENT

FIRST USED ON VM1

EXCEPT AS NOTED: ALL DIMENSIONS IN INCHES TOLERANCE
DECIMAL
.0 ±.0300
.00 ±.0150
.000 ±.0050
.0000 ±.0005
ANGULAR ± 0°30'

THIRD ANGLE PROJECTION

HURCO MANUFACTURING COMPANY, INC.
INDIANAPOLIS, IN U.S.A.

DESCRIPTION: HARNESS, Z AXIS MOTOR ENCODER

| DRAWN | DATE | CHECKED | DATE | APPROVED | DATE |
|---|---|---|---|---|---|
| ROD | 3-12-02 | | | | |

| SCALE | SIZE | DRAWING | SHT. | REV. |
|---|---|---|---|---|
| NONE | C | 423-4401-762 | 1 OF 1 | B |

UNIT OF MEAS: EA

| SIZE | DRAWING | SHT. | REV. | PROPRIETARY INFORMATION |
|---|---|---|---|---|
| B | 423–4401–763 | 1 OF 1 | A | INFORMATION CONTAINED HEREIN IS THE PROPERTY OF HURCO MANUFACTURING COMPANY, INC. NO REPRODUCTION OR DISCLOSURE OF THIS INFORMATION SHALL BE MADE BY THE RECIPIENT TO ANY OTHER PERSON OR ORGANIZATION WITHOUT THE PRIOR WRITTEN CONSENT OF HURCO MANUFACTURING COMPANY, INC. |

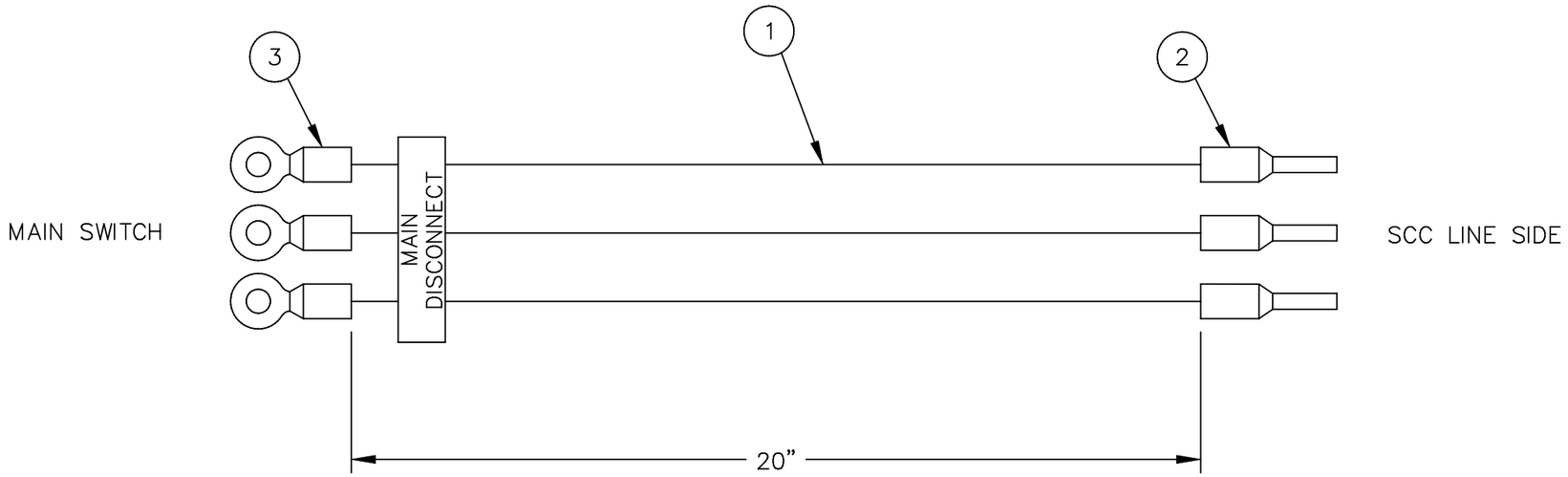


MAIN SWITCH — SCC LINE SIDE

| | | |
|---|---|---|
| U | BRN | SCC1 |
| V | BLU | SCC3 |
| W | BLK | SCC5 |

NOTE:

(1) DIMENSIONS ARE SHOWN AS INCHES

| QTY. | PART NUMBER | ITEM DESCRIPTION | ITEM |
|---|---|---|---|
| 3 | 780–0002–005 | RING TONGUE, 8–6R | 3 |
| 3 | 406–0965–009 | FERRULE 8.0 SQMM | 2 |
| 20” | 780–0001–007 | CABLE, 4–COND, 8 SQ MM | 1 |

PARTS LIST

| REV | E.C.N. NO. | REVISION DESCRIPTION | REV BY | DATE | CHK BY | DATE | APPD BY | DATE | DF |
|---|---|---|---|---|---|---|---|---|---|
| A | 15352 | REL | | | | | | | |

SURFACE TREATMENT ~

HEAT TREATMENT ~

FIRST USED ON VM1

EXCEPT AS NOTED: ALL CORNERS MUST BE AS FOLLOWS
INSIDE: 1.3 X 45° OR 1.3 R MAX
OUTSIDE: 0.8 X 45° OR 1.3 R

EXCEPT AS NOTED: WELDING TOLERANCE MUST BE AS FOLLOWS ±3

EXCEPT AS NOTED: ALL DIMENSIONS IN METRIC TOLERANCE
DECIMAL
.0 ±0.8
.00 ±0.4
.000 ±0.13
.0000 ±0.013
ANGULAR ± 0°30'

THIRD ANGLE PROJECTION

HURCO MANUFACTURING COMPANY, INC.
INDIANAPOLIS, IN U.S.A.

DESCRIPTION: HARNESS, MAIN DISCONNECT

| DRAWN | DATE | CHECKED | DATE | APPROVED | DATE |
|---|---|---|---|---|---|
| ROD | 3–28–02 | | | | |

SCALE: NONE
UNIT OF MEAS.: EA.
SIZE: B
DRAWING: 423–4401–763
SHT.: 1 OF 1
REV.: A

| SIZE | DRAWING | SHT. | REV. |
|---|---|---|---|
| C | 423-4401-764<br>423-4401-765 | 1 OF 1 | B |

PROPRIETARY INFORMATION

INFORMATION CONTAINED HEREIN IS THE PROPERTY OF HURCO MANUFACTURING COMPANY, INC. NO REPRODUCTION OR DISCLOSURE OF THIS INFORMATION SHALL BE MADE BY THE RECIPIENT TO ANY OTHER PERSON OR ORGANIZATION WITHOUT THE PRIOR WRITTEN CONSENT OF HURCO MANUFACTURING COMPANY, INC.

| DIM. | Y AXIS (-765) | X AXIS (-764) |
|---|---|---|
| A | 63'' | 125'' |
| B | 128'' | 185'' |

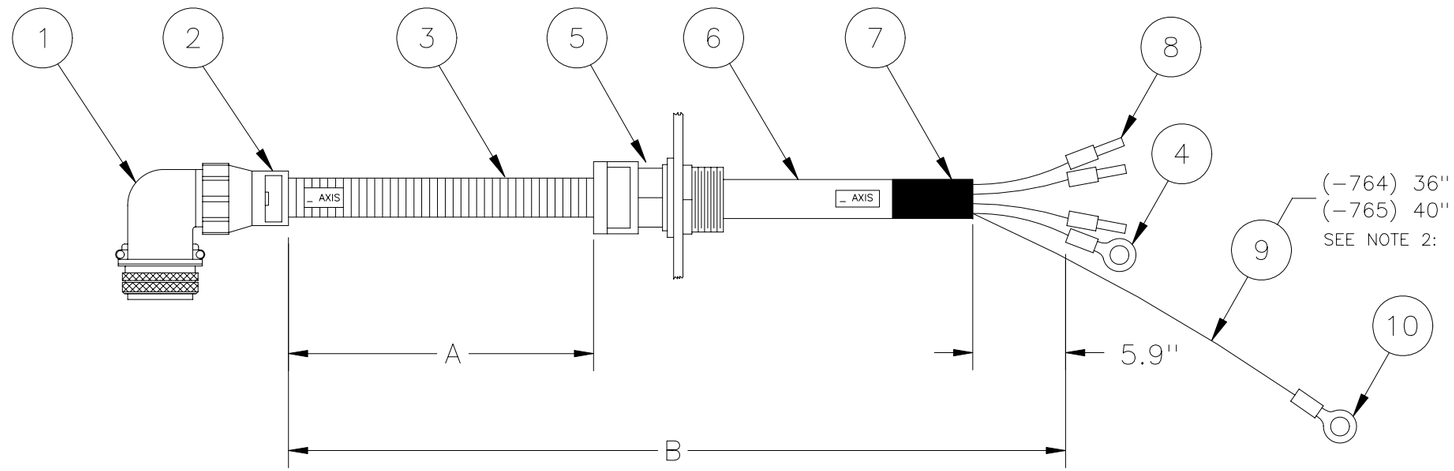


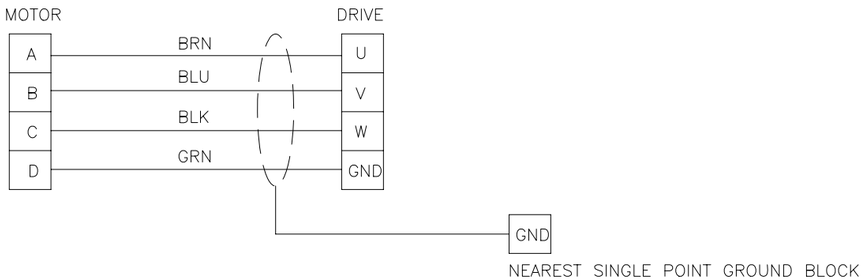


NOTE:
1) WIRE COLORS ARE VENDOR DISCRETION, COLORS SHOWN ARE SUGGESTED.
(B2) 2) SOLDER ITEMS 9, 10 TO SHIELD DRAIN WIRE, ATTACH TO NEAREST SINGLE POINT GROUND BLOCK.

PARTS LIST

| | QTY. -765 Y-AXIS | QTY. -764 X-AXIS | PART NUMBER | ITEM DESCRIPTION | ITEM |
|---|---|---|---|---|---|
| (B2) | 1 | 1 | 406-7001-017 | RING TONGUE, 2.0-5R | 10 |
| (B2) | 40'' | 36'' | 406-2003-015 | WIRE, 14 AWG (2.0SQMM), GREEN | 9 |
| | 3 | 3 | 406-0965-007 | FERRULE, 14AWG LONG | 8 |
| | 2'' | 2'' | 780-0003-004 | HEATSHRINK, 10MM DIA | 7 |
| (B1) | 128'' | 185'' | 780-0001-015 | CABLE, 4-COND, 2.0SQ MM W/ BRAIDED SHIELD | 6 |
| | 1 | 1 | 408-0171-060 | FITTING, PG16 CONDUIT | 5 |
| | 1 | 1 | 780-0002-010 | RING TONGUE, 2.0-4R | 4 |
| | 63'' | 125'' | 408-0171-055 | CONDUIT, 1/2'' BLACK FLEXIBLE | 3 |
| | 1 | 1 | 408-0171-064 | ADAPTER, 1''-20 - 16MM CONDUIT | 2 |
| | 1 | 1 | 406-0321-017 | CONNECTOR, 90 DEG ANGLE, (18-10S) | 1 |

| REV | E.C.N. NO. | REVISION DESCRIPTION | REV BY | DATE | CHK BY | DATE | APPD BY | DATE | DF |
|---|---|---|---|---|---|---|---|---|---|
| B | 15599 | 1) WAS 780-0001-010 2) ADDED FOR SHIELD GROUNDING CONNECTION | ROD | 05 JUL 03 | SAR | 11 JUL 03 | DEO | 11 JUL 03 | |
| A | 15352 | RELEASE | | | | | | | |

SURFACE TREATMENT

HEAT TREATMENT

FIRST USED ON
VM1

EXCEPT AS NOTED: ALL CORNERS MUST BE AS FOLLOWS
INSIDE: .050'' X 45° OR .05'' R MAX
OUTSIDE: .030'' X 45° OR .05'' R

EXCEPT AS NOTED: WELDING TOLERANCE MUST BE AS FOLLOWS ±.12

EXCEPT AS NOTED: ALL DIMENSIONS IN INCHES TOLERANCE
DECIMAL
.0 ±.0300
.00 ±.0150
.000 ±.0050
.0000 ±.0005
ANGULAR ± 0°30'

THIRD ANGLE PROJECTION

HURCO MANUFACTURING COMPANY, INC.
INDIANAPOLIS, IN U.S.A.

DESCRIPTION
HARNESS, X, Y AXIS MOTOR POWER VM1

| DRAWN | DATE | CHECKED | DATE | APPROVED | DATE |
|---|---|---|---|---|---|
| ROD | 3-12-02 | | | | |

| SCALE | SIZE | DRAWING | SHT. | REV. |
|---|---|---|---|---|
| NONE | C | 423-4401-764<br>423-4401-765 | 1 OF 1 | B |

UNIT OF MEAS
EA

| SIZE | DRAWING | SHT. | REV. |
|---|---|---|---|
| C | 423-4401-767 | 1 OF 1 | A |

PROPRIETARY INFORMATION

INFORMATION CONTAINED HEREIN IS THE PROPERTY OF HURCO MANUFACTURING COMPANY, INC. NO REPRODUCTION OR DISCLOSURE OF THIS INFORMATION SHALL BE MADE BY THE RECIPIENT TO ANY OTHER PERSON OR ORGANIZATION WITHOUT THE PRIOR WRITTEN CONSENT OF HURCO MANUFACTURING COMPANY, INC.

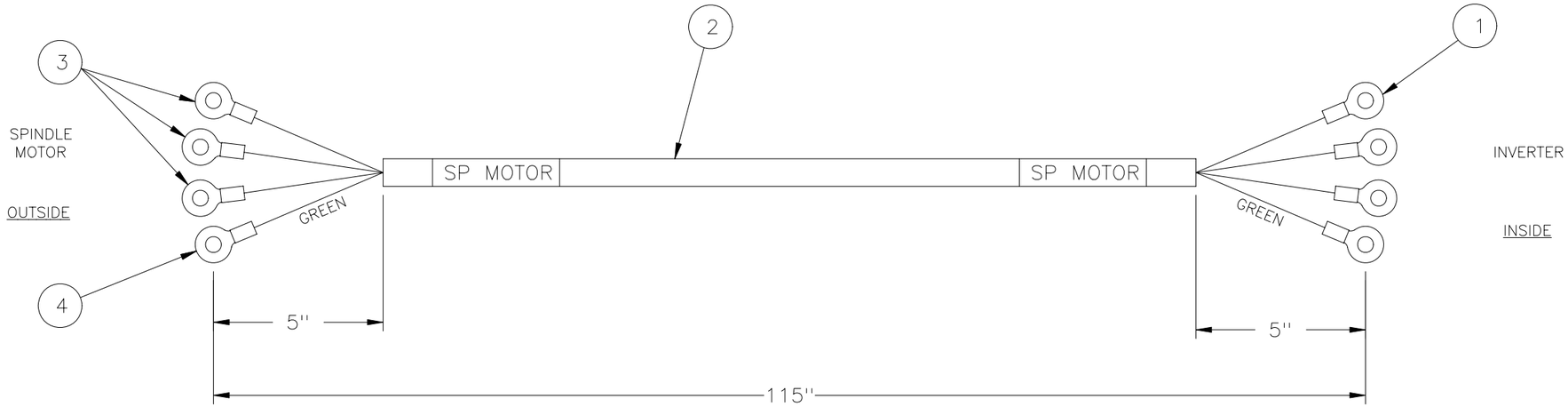


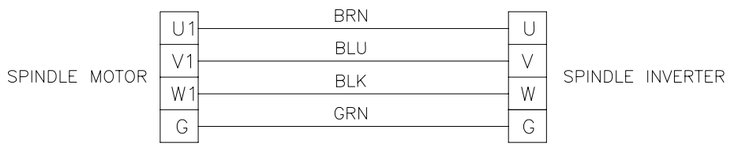


NOTE:
1) DIMENSIONS ARE SHOWN AS INCHES.

| QTY. | PART NUMBER | ITEM DESCRIPTION | ITEM |
|---|---|---|---|
| 1 | 780-0002-023 | RING TONGUE, 8-8R | 4 |
| 3 | 780-0002-005 | RING TONGUE, 8-6R | 3 |
| 115'' | 780-0001-007 | CABLE, 4-COND, 8 SQ MM | 2 |
| 4 | 780-0002-022 | RING TONGUE, 8-5R | 1 |

PARTS LIST

| REV | P.I.N. NO. | REVISION DESCRIPTION | REV BY | DATE | CHK BY | DATE | APPD BY | DATE | DF |
|---|---|---|---|---|---|---|---|---|---|
| A | 15352 | RELEASE | | | | | | | |

SURFACE TREATMENT

HEAT TREATMENT

FIRST USED ON VM1

EXCEPT AS NOTED: ALL CORNERS MUST BE AS FOLLOWS
INSIDE: 1.3 X 45° OR 1.3 R MAX
OUTSIDE: 0.8 X 45° OR 1.3 R

EXCEPT AS NOTED: WELDING TOLERANCE MUST BE AS FOLLOWS ±3

EXCEPT AS NOTED: ALL DIMENSIONS IN METRIC TOLERANCE
DECIMAL
.0 ±0.8
.00 ±0.4
.000 ±0.13
.0000 ±0.013
ANGULAR ± 0°30'

THIRD ANGLE PROJECTION

HURCO MANUFACTURING COMPANY, INC.
INDIANAPOLIS, IN U.S.A.

DESCRIPTION: HARNESS, SPINDLE MOTOR POWER

| DRAWN | DATE | CHECKED | DATE | APPROVED | DATE |
|---|---|---|---|---|---|
| ROD | 3-12-02 | | | | |

| SCALE | SIZE | DRAWING | SHT. | REV. |
|---|---|---|---|---|
| NONE | C | 423-4401-767 | 1 OF 1 | A |

UNIT OF MEAS. EA

| SIZE | DRAWING | SHT. | REV. |
|---|---|---|---|
| C | 423-4401-768 | 1 OF 1 | B |

PROPRIETARY INFORMATION
INFORMATION CONTAINED HEREIN IS THE PROPERTY OF HURCO MANUFACTURING COMPANY, INC. NO REPRODUCTION OR DISCLOSURE OF THIS INFORMATION SHALL BE MADE BY THE RECIPIENT TO ANY OTHER PERSON OR ORGANIZATION WITHOUT THE PRIOR WRITTEN CONSENT OF HURCO MANUFACTURING COMPANY, INC.

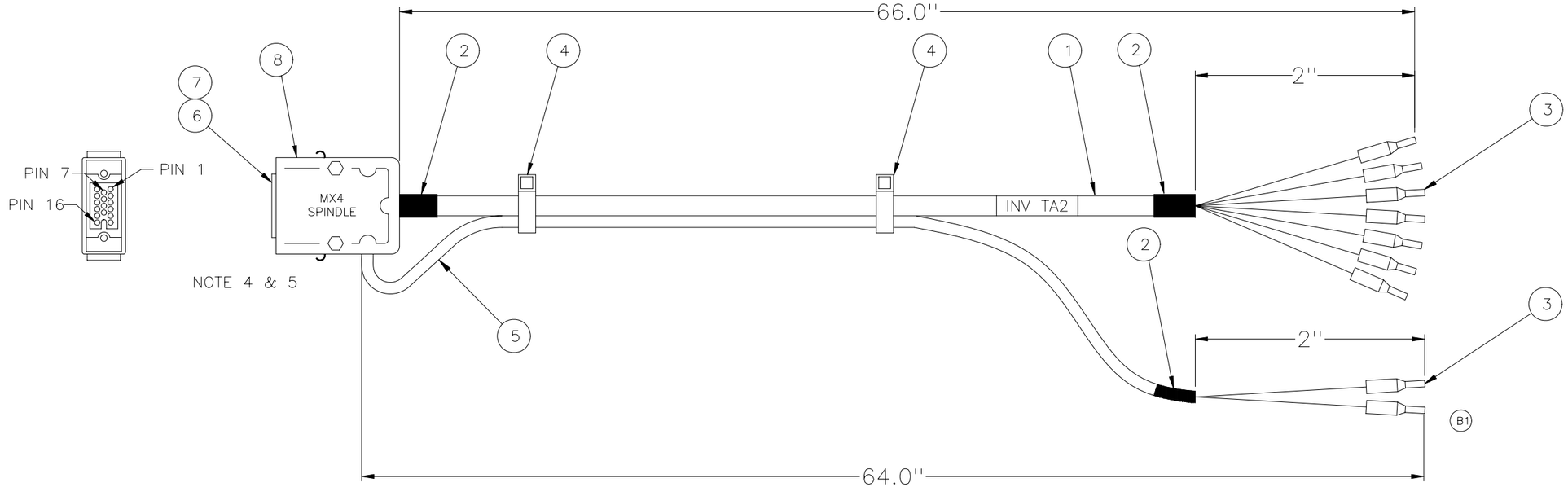


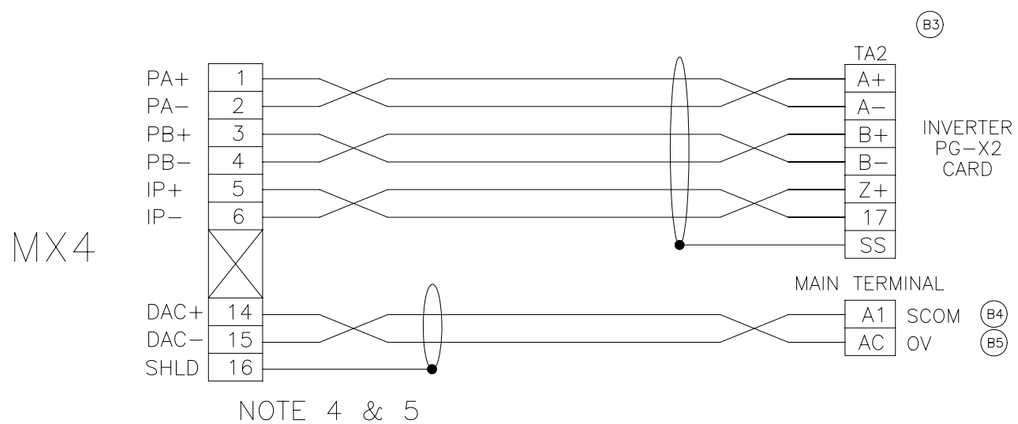


NOTES:
1. LABEL CABLE WITH REFERENCE DESIGNATORS SHOWN
2. DIMENSIONS REFER TO STRAIGHT−LINE LENGTH, TOLERANCE +/−1/2''.
3. FINISHED ASSEMBLY TO BE MARKED WITH THE HURCO PART NUMBER AND REVISION LETTER.
4. USE ITEM #9 TO TERMINAL DRAIN AND FOR JUMPERS.
5. FILL ALL UNUSED POSITION WHERE NOTED.

PARTS LIST

| | QTY. | PART NUMBER | ITEM DESCRIPTION | ITEM |
|---|---|---|---|---|
| B1 | | | | 10 |
| | 5'' | 406-2017-002 | WIRE, 24AWG BLACK | 9 |
| | 1 | 406-0811-002 | CASE, VERT/HORZ 16 POS | 8 |
| | 16 | 406-0811-008 | CONTACT, MALE SILVER | 7 |
| | 1 | 406-0811-019 | INSULATOR, 16 POS MALE | 6 |
| | 64'' | 406-1247-094 | CABLE, 1 PR SHIELDED 24AWG | 5 |
| | 2 | 406-5001-003 | TIE WRAP, SMALL | 4 |
| B2 | 9 | 406-0965-014 | FERRULE, 24AWG, LIGHT YELLOW | 3 |
| | 6'' | 406-6481-004 | SHRINK TUBE, 1/4'' BLACK | 2 |
| | 66'' | 406-1247-095 | CABLE, 3 PR SHIELDED 24AWG | 1 |

| REV | P.I.N. NO. | REVISION DESCRIPTION | REV BY | DATE | CHK BY | DATE | APPD BY | DATE | DF |
|---|---|---|---|---|---|---|---|---|---|
| B | 15851 | 3) DEL THE LABEL COLUMN OF TB5; 4)&5) WAS LABEL '13' & '17'; 1) DEL 406-7001-025, QTY.3; 2) ADDED MORE 2, WAS QTY. 15 BY ERR. | ROD | 10 MAY 05 | | | | | |
| A | 15352 | RELEASE | | | | | | | |

SURFACE TREATMENT

HEAT TREATMENT

FIRST USED ON VM1

EXCEPT AS NOTED: ALL DIMENSIONS IN INCHES TOLERANCE
DECIMAL
.0 ±.0300
.00 ±.0150
.000 ±.0050
.0000 ±.0005
ANGULAR ± 0°30'

THIRD ANGLE PROJECTION

HURCO MANUFACTURING COMPANY, INC.
INDIANAPOLIS, IN U.S.A.

DESCRIPTION: HARNESS, MAX4 TO SPINDLE DRIVE

| DRAWN | DATE | CHECKED | DATE | APPROVED | DATE |
|---|---|---|---|---|---|
| ROD | 3-6-02 | | | | |

| SCALE | SIZE | DRAWING | SHT. | REV. |
|---|---|---|---|---|
| NONE | C | 423-4401-768 | 1 OF 1 | B |

UNIT OF MEAS EA

| SIZE | DRAWING | SHT. | REV. |
|---|---|---|---|
| B | 423-4401-791 | 1 OF 1 | B |

PROPRIETARY INFORMATION

INFORMATION CONTAINED HEREIN IS THE PROPERTY OF HURCO MANUFACTURING COMPANY, INC. NO REPRODUCTION OR DISCLOSURE OF THIS INFORMATION SHALL BE MADE BY THE RECIPIENT TO ANY OTHER PERSON OR ORGANIZATION WITHOUT THE PRIOR WRITTEN CONSENT OF HURCO MANUFACTURING COMPANY, INC.

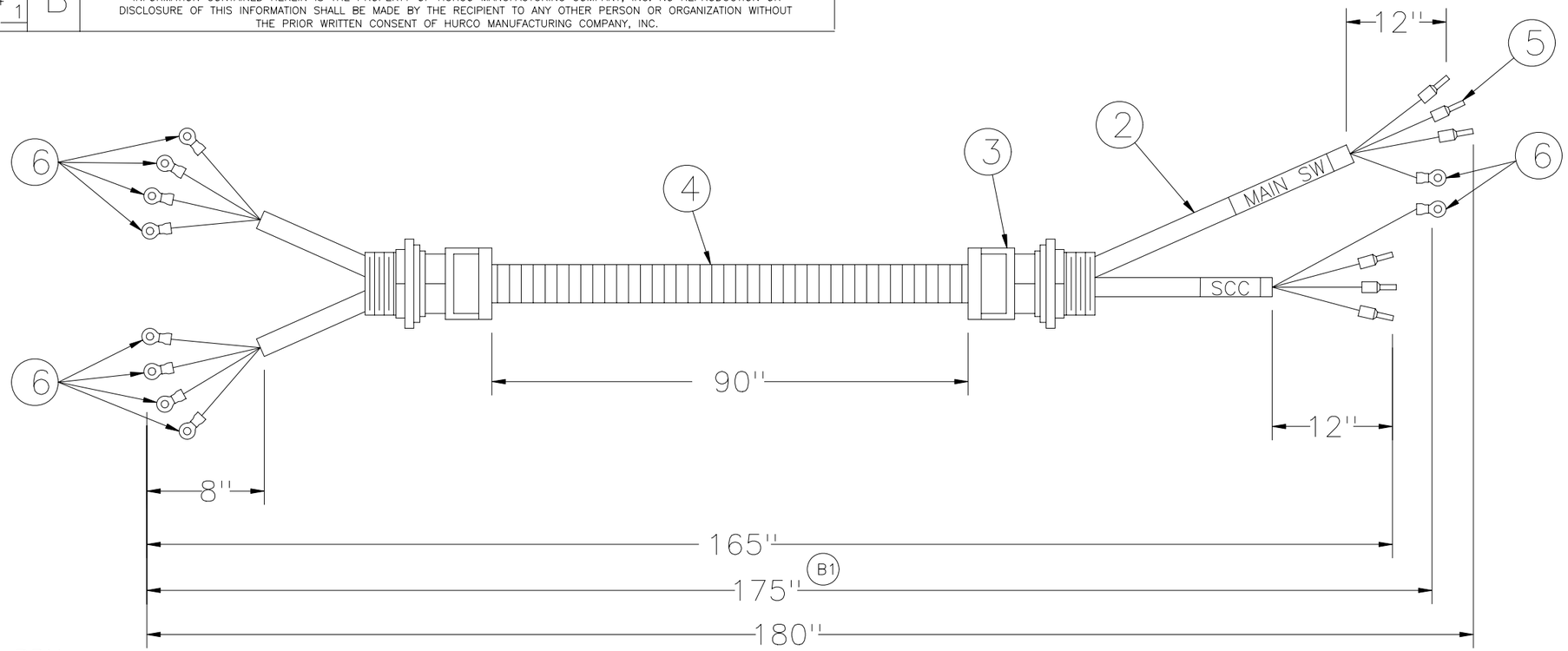


TR1 PRIMARY

| | | |
|---|---|---|
| 400R | BRN | U |
| 400S | BLU | V |
| 400T | BLK | W |
| G | Y/G | G |

MAIN SWITCH

GROUND BAR, 8 POS

TR1 SECOND

| | | |
|---|---|---|
| N | Y/G | G |
| 220U | BRN | SCC1 |
| 220V | BLU | SCC3 |
| 220W | BLK | SCC5 |

GROUND BAR, 8 POS

SCC

NOTE:
WIRE COLORS ARE VENDORS DISCRETION, COLORS SHOWN ARE SUGGESTIONS.

PARTS LIST

| ITEM | ITEM DESCRIPTION | PART NUMBER | QTY. | |
|---|---|---|---|---|
| 6 | RING TONGUE, 8-5R | 780-0002-022 | 10 | B3 |
| 5 | PIN TONGUE, 8AWG | 780-0002-016 | 6 | |
| 4 | CONDUIT, 1-1/4'' BLACK FLEXIBLE | 408-0171-038 | 90'' | |
| 3 | FITTING, PG36 | 408-0171-085 | 2 | |
| 2 | CABLE, 4-COND, 8 SQ MM | 780-0001-012 | 360'' | |
| 1 | | | | B2 |

| REV | P.I.N. NO. | REVISION DESCRIPTION | REV BY | DATE | CHK BY | DATE | APPD BY | DATE | DF |
|---|---|---|---|---|---|---|---|---|---|
| B | 15540 | 2) WAS 780-0002-005, QTY 8 3) WAS QTY 2<br>1) ADDED THE DIMENSION FOR GROUND WIRE | 03 13 03 | ROD | | | | | |
| A | 15352 | RELEASE | | | | | | | |

SURFACE TREATMENT

HEAT TREATMENT

FIRST USED ON
VM1

EXCEPT AS NOTED:
ALL CORNERS MUST BE AS FOLLOWS
INSIDE:
.050'' X 45° OR .05'' R MAX
OUTSIDE:
.030'' X 45° OR .05'' R

EXCEPT AS NOTED:
WELDING TOLERANCE MUST BE AS FOLLOWS
±.12

EXCEPT AS NOTED:
ALL DIMENSIONS IN INCHES
TOLERANCE
DECIMAL
.0 ±.0300
.00 ±.0150
.000 ±.0050
.0000 ±.0005
ANGULAR ± 0°30'

THIRD ANGLE PROJECTION

HURCO MANUFACTURING COMPANY, INC.
INDIANAPOLIS, IN U.S.A.

DESCRIPTION
HARNESS, TR1 MAIN POWER

| DRAWN | DATE | CHECKED | DATE | APPROVED | DATE |
|---|---|---|---|---|---|
| ROD | 3-18-02 | SJT | 5-28-02 | DEO | 5-29-02 |

| SCALE | SIZE | DRAWING | SHT. | REV. |
|---|---|---|---|---|
| NONE | B | 423-4401-791 | 1 OF 1 | B |

UNIT OF MEAS.
EA.

| SIZE | DRAWING | SHT. | REV. | PROPRIETARY INFORMATION |
|---|---|---|---|---|
| B | 423–4401–793 | 1 OF 1 | A | INFORMATION CONTAINED HEREIN IS THE PROPERTY OF HURCO MANUFACTURING COMPANY, INC. NO REPRODUCTION OR DISCLOSURE OF THIS INFORMATION SHALL BE MADE BY THE RECIPIENT TO ANY OTHER PERSON OR ORGANIZATION WITHOUT THE PRIOR WRITTEN CONSENT OF HURCO MANUFACTURING COMPANY, INC. |

NOTES:

1. POPULATE ALL UNUSED POSITIONS WITH EMPTY TERMINALS.
2. LABEL AS SHOWN.

SCHEMATIC

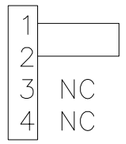


ASSEMBLY

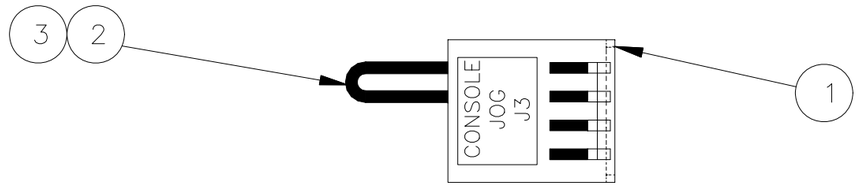


| QTY. | PART NUMBER | ITEM DESCRIPTION | ITEM |
|---|---|---|---|
| | | PARTS LIST | |
| 2'' | 406–2017–003 | WIRE, 24 AWG 300 V RED | 3 |
| 4 | 406–0801–207 | TERMINAL, CRIMP, 22–30 AWG. | 2 |
| 1 | 406–0801–199 | HOUSING, 9 PIN, W/RAMP, POLARIZING | 1 |

| REV | E.C.N. NO. | REVISION DESCRIPTION | REV BY | DATE | CHK BY | DATE | APPD BY | DATE | DF |
|---|---|---|---|---|---|---|---|---|---|
| A | 15443 | REL | | | | | | | |

SURFACE TREATMENT

HEAT TREATMENT

FIRST USED ON MAX

EXCEPT AS NOTED: ALL CORNERS MUST BE AS FOLLOWS
INSIDE: .050'' X 45° OR .05'' R MAX
OUTSIDE: .030'' X 45° OR .05'' R

EXCEPT AS NOTED: WELDING TOLERANCE MUST BE AS FOLLOWS ±.12

EXCEPT AS NOTED: ALL DIMENSIONS IN INCHES TOLERANCE
DECIMAL
.0 ±.0300
.00 ±.0150
.000 ±.0050
.0000 ±.0005
ANGULAR ± 0°30'

THIRD ANGLE PROJECTION

HURCO MANUFACTURING COMPANY, INC.
INDIANAPOLIS, IN U.S.A.

DESCRIPTION: HARNESS, CONSOLE JOG E–STOP BYPASS, 4 PIN

| DRAWN | DATE | CHECKED | DATE | APPROVED | DATE |
|---|---|---|---|---|---|
| WRS | 4–8–02 | FWG | 7/30/02 | | |

| SCALE | SIZE | DRAWING | SHT. | REV. |
|---|---|---|---|---|
| NONE | B | 423–4401–793 | 1 OF 1 | A |

UNIT OF MEAS. EA.

| SIZE | DRAWING | SHT. | REV. |
|---|---|---|---|
| B | 423-4401-822 | 1 OF 1 | B |

PROPRIETARY INFORMATION

INFORMATION CONTAINED HEREIN IS THE PROPERTY OF HURCO MANUFACTURING COMPANY, INC. NO REPRODUCTION OR DISCLOSURE OF THIS INFORMATION SHALL BE MADE BY THE RECIPIENT TO ANY OTHER PERSON OR ORGANIZATION WITHOUT THE PRIOR WRITTEN CONSENT OF HURCO MANUFACTURING COMPANY, INC.

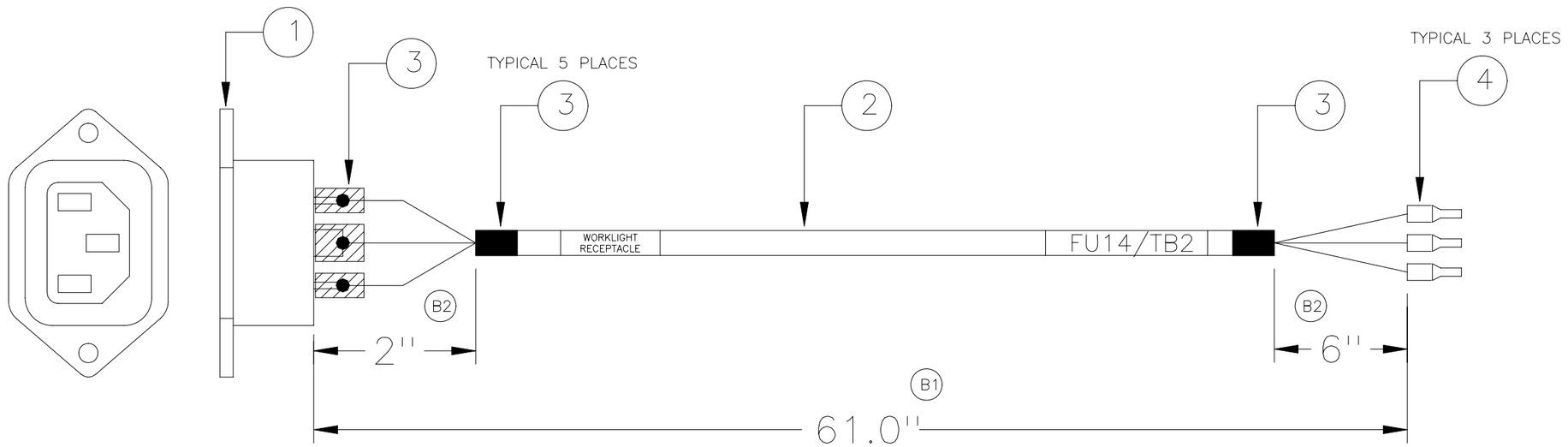


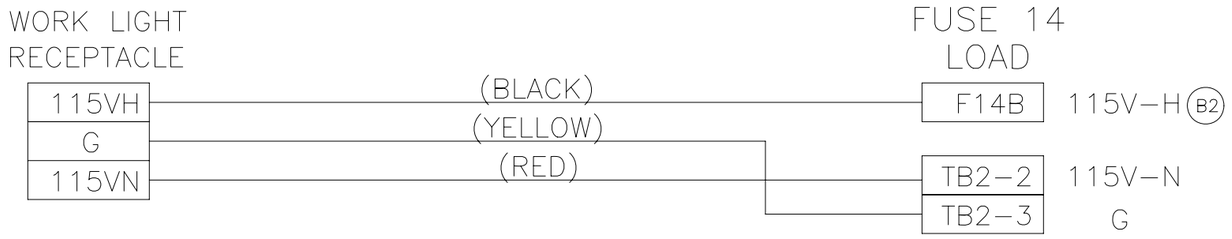


NOTES:

1. MARK HARNESS WITH HURCO PART NUMBER AND REVISION.
2. OVERALL DIMENSION IS STRAIGHT LINE LENGTH OF HARNESS, +1''.
3. LABEL CABLE AS SHOWN.

(B4) 4. SOLDER THE WIRE TO RECEPTACLE AND PROTECT WITH HEATSHRINK.

| QTY. | PART NUMBER | ITEM DESCRIPTION | ITEM |
|---|---|---|---|
| 3 | 406-0965-003 | FERRULE, 18AWG LT BLUE | 4 |
| 5'' | 406-6481-004 | HEATSHRINK, 1/4'', BLACK | 3 |
| 61'' | 406-1247-096 | CABLE, 3-COND, 18AWG | 2 |
| 1 | 406-0121-067 | RECEPTACLE, 110VAC, 3P | 1 |

PARTS LIST

| REV | P.I.N. NO. | REVISION DESCRIPTION | REV BY | DATE | CHK BY | DATE | APPD BY | DATE | DF |
|---|---|---|---|---|---|---|---|---|---|
| B | 15649 | 3) ADDED THE STRIP LENGTH AS SHOW; 4) ADDED NOTE 3, 4; 1) WAS 660mm; 2) WAS CONNECT TO TB2-1 BY ERROR; | ROD | 29 JUL 03 | SJT | 10 SEP 03 | | | |
| A | 15516 | RELEASE | | | | | | | |

SURFACE TREATMENT

HEAT TREATMENT

FIRST USED ON VM1

EXCEPT AS NOTED: ALL CORNERS MUST BE AS FOLLOWS
INSIDE: .050'' X 45° OR .05'' R MAX
OUTSIDE: .030'' X 45° OR .05'' R

EXCEPT AS NOTED: WELDING TOLERANCE MUST BE AS FOLLOWS ±.12

EXCEPT AS NOTED: ALL DIMENSIONS IN INCHES TOLERANCE
DECIMAL .0 ±.0300, .00 ±.0150, .000 ±.0050, .0000 ±.0005
ANGULAR ± 0°30'

THIRD ANGLE PROJECTION

HURCO MANUFACTURING COMPANY, INC.
INDIANAPOLIS, IN U.S.A.

DESCRIPTION: HARNESS, WORKLIGHT RECEPTACLE, 110V

| DRAWN | DATE | CHECKED | DATE | APPROVED | DATE |
|---|---|---|---|---|---|
| ROD | 10-2-02 | SJT | 10-3-02 | DEO | 10-4-02 |

| SCALE | SIZE | DRAWING | SHT. | REV. |
|---|---|---|---|---|
| NONE | B | 423-4401-822 | 1 OF 1 | B |

UNIT OF MEAS. EA.

| SIZE | DRAWING | SHT. | REV. |
|---|---|---|---|
| C | 423-4401-865 | 1 OF 1 | B |

PROPRIETARY INFORMATION
INFORMATION CONTAINED HEREIN IS THE PROPERTY OF HURCO MANUFACTURING COMPANY, INC. NO REPRODUCTION OR DISCLOSURE OF THIS INFORMATION SHALL BE MADE BY THE RECIPIENT TO ANY OTHER PERSON OR ORGANIZATION WITHOUT THE PRIOR WRITTEN CONSENT OF HURCO MANUFACTURING COMPANY, INC.

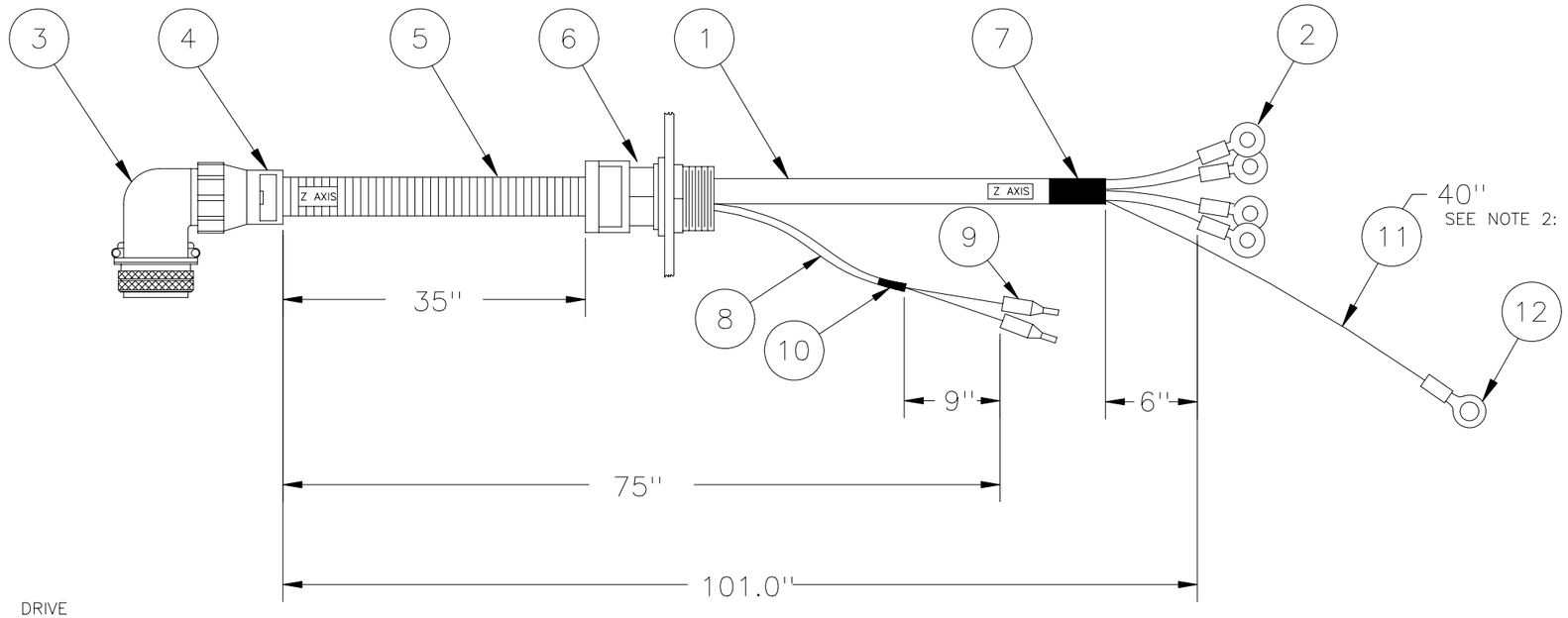


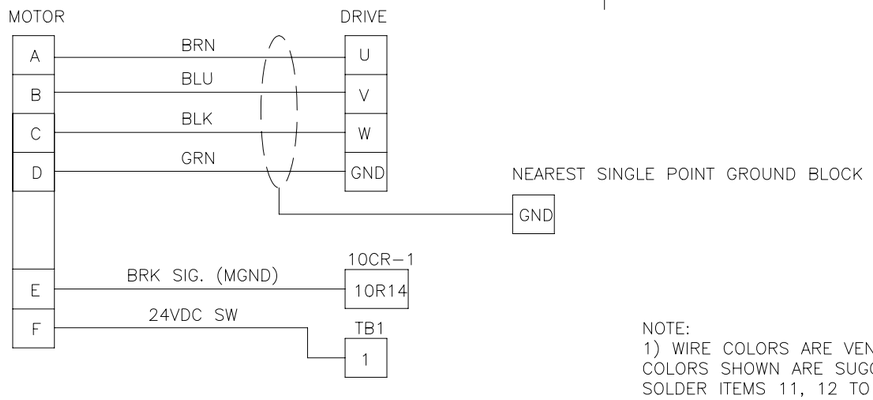


NOTE:
1) WIRE COLORS ARE VENDOR DISCRETION, COLORS SHOWN ARE SUGGESTED.
SOLDER ITEMS 11, 12 TO SHIELD DRAIN WIRE, ATTACH TO NEAREST SINGLE POINT GROUND BLOCK.

PARTS LIST

| ITEM | PART NUMBER | ITEM DESCRIPTION | QTY. |
|---|---|---|---|
| 12 | 780-0002-025 | RING TONGUE, 3.5-5R | 1 |
| 11 | 406-2002-015 | WIRE, 12 AWG (3.5SQMM), GREEN | 40'' |
| 10 | 780-0003-001 | HEATSHRINK, 4MM DIA. | 2'' |
| 9 | 406-0965-013 | FERRULE, 22AWG, GREY | 2 |
| 8 | 406-1247-029 | CABLE, 2-COND, 22AWG | 75'' |
| 7 | 780-0003-004 | HEATSHRINK, 10MM DIA | 2'' |
| 6 | 408-0171-066 | FITTING, PG21 CONDUIT | 1 |
| 5 | 408-0171-036 | CONDUIT, EX-FLEX 3/4'' | 35'' |
| 4 | 408-0171-030 | ADAPTER, 1 7/16''-18 - FOR 3/4'' CONDUIT | 1 |
| 3 | 406-0321-025 | CONNECTOR, 90 DEG ANGLE (24-10S) | 1 |
| 2 | 406-7001-045 | RING TONGUE, 3/8'' 10-12AWG | 4 |
| 1 | 780-0001-017 | CABLE, 4-COND, 5.5SQ MM W/ BRAIDED SHIELD | 101'' |

(B1)

| REV | E.C.N. NO. | REVISION DESCRIPTION | REV BY | DATE | CHK BY | DATE | APPD BY | DATE | DF |
|---|---|---|---|---|---|---|---|---|---|
| B | 155991 | WAS 780-0002-011 | SAR | 18 JUL 03 | DEO | 20 JUL 03 | DEO | 20 JUL 03 | |
| A | 155401 | RELEASE | | | | | | | |

SURFACE TREATMENT
HEAT TREATMENT
FIRST USED ON VM1

EXCEPT AS NOTED: ALL CORNERS MUST BE AS FOLLOWS
INSIDE: .050'' X 45° OR .05'' R MAX
OUTSIDE: .030'' X 45° OR .05'' R
EXCEPT AS NOTED: WELDING TOLERANCE MUST BE AS FOLLOWS ±.12

EXCEPT AS NOTED: ALL DIMENSIONS IN INCHES TOLERANCE
DECIMAL .0 ±.0300; .00 ±.0150; .000 ±.0050; .0000 ±.0005
ANGULAR ± 0°30'
THIRD ANGLE PROJECTION

HURCO MANUFACTURING COMPANY, INC.
INDIANAPOLIS, IN U.S.A.

DESCRIPTION: HARNESS, Z-AXIS MOTOR POWER, VM1

| DRAWN | DATE | CHECKED | DATE | APPROVED | DATE |
|---|---|---|---|---|---|
| ROD | 11-28-02 | | | | |

| SCALE | SIZE | DRAWING | SHT. | REV. |
|---|---|---|---|---|
| NONE | C | 423-4401-865 | 1 OF 1 | B |

UNIT OF MEAS: EA

| SIZE | DRAWING | SHT. | REV. |
|---|---|---|---|
| C | 423-4401-866 | 1 OF 1 | A |

PROPRIETARY INFORMATION

INFORMATION CONTAINED HEREIN IS THE PROPERTY OF HURCO MANUFACTURING COMPANY, INC. NO REPRODUCTION OR DISCLOSURE OF THIS INFORMATION SHALL BE MADE BY THE RECIPIENT TO ANY OTHER PERSON OR ORGANIZATION WITHOUT THE PRIOR WRITTEN CONSENT OF HURCO MANUFACTURING COMPANY, INC.

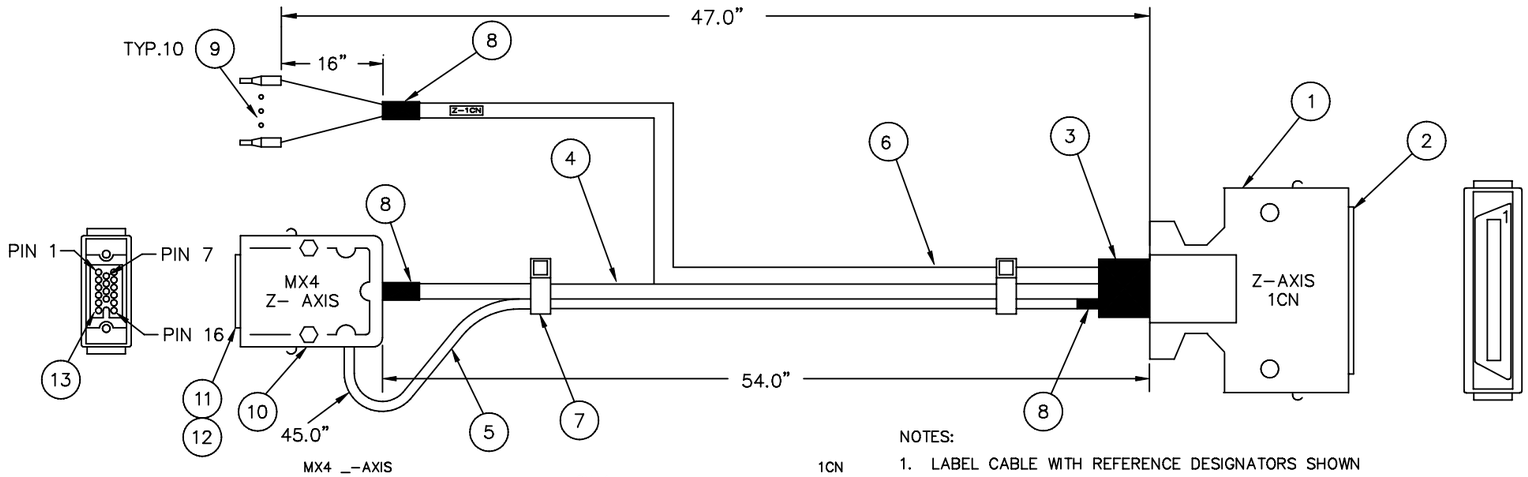


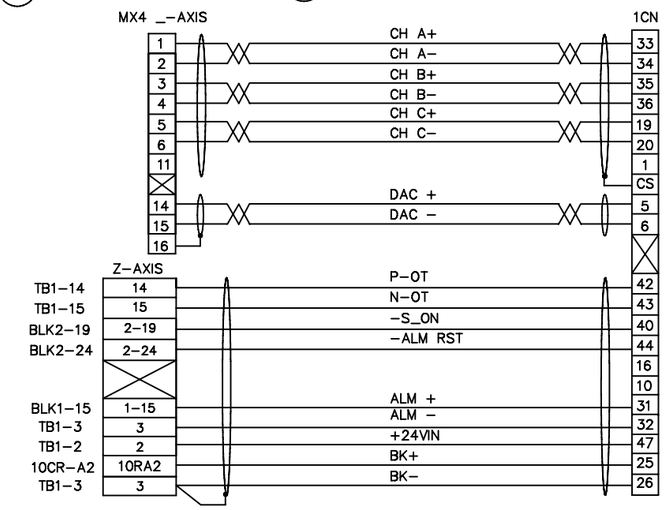


NOTES:

1. LABEL CABLE WITH REFERENCE DESIGNATORS SHOWN
2. DIMENSIONS REFER TO STRAIGHT-LINE LENGTH, TOLERANCE +/-1/2".
3. FINISHED ASSEMBLY TO BE MARKED WITH THE HURCO PART NUMBER AND REVISION LETTER.
4. USE 1/2" OF 3/32" HEAT SHRINK TUBING ON EACH TERMINAL OF 1CN CONNECTOR
5. LABEL TB-R END CONDUCTORS WITH NUMBERED I.D. BANDS (SHIELDS EXCEPTED).
6. WIRE COLORS ARE AT VENDOR DISCRETION, COLORS SHOWN ARE SUGGESTED ONLY.
7. CS = CONNECTOR SHELL SHIELD TERMINAL

PARTS LIST

| QTY. | PART NUMBER | ITEM DESCRIPTION | ITEM |
|---|---|---|---|
| 7" | 406-6481-015 | HEAT SHRINK, 3/32" BLACK | 13 |
| 16 | 406-0811-008 | CONTACT, MALE SILVER | 12 |
| 1 | 406-0811-019 | INSULATOR, 16-POS MALE | 11 |
| 1 | 406-0811-002 | CASE, VERT/HORZ 16-POS | 10 |
| 12 | 406-0965-014 | FERRULE, 24AWG LIGHT YELLOW | 9 |
| 4" | 406-6481-004 | HEATSHRINK, 1/4" BLACK | 8 |
| 2 | 406-5001-003 | TIE WRAP SMALL | 7 |
| 47" | 406-1247-093 | CABLE, 24GA, 15-COND, SHLD | 6 |
| 45" | 406-1247-094 | CABLE, 24GA, 1 TW/PR, SHLD | 5 |
| 44" | 406-1328-006 | CABLE, 24GA, 4 TW/PR, SHLD | 4 |
| 2" | 406-6481-006 | HEATSHRINK, 1/2" BLACK | 3 |
| 1 | 406-0802-079 | CONNECTOR, 10150-3000VE (3M) | 2 |
| 1 | 406-0802-080 | CASE, 10350-52A0-008 (3M) | 1 |

| REV | P.I.N. NO. | REVISION DESCRIPTION | REV BY | DATE | CHK BY | DATE | APPD BY | DATE | DF |
|---|---|---|---|---|---|---|---|---|---|
| A | 15540 | RELEASE | | | | | | | |

SURFACE TREATMENT

HEAT TREATMENT

FIRST USED ON: VM1

EXCEPT AS NOTED: ALL DIMENSIONS IN INCHES
TOLERANCE DECIMAL
.0 ±.0300
.00 ±.0150
.000 ±.0050
.0000 ±.0005
ANGULAR ± 0°30'

THIRD ANGLE PROJECTION

HURCO MANUFACTURING COMPANY, INC.
INDIANAPOLIS, IN U.S.A.

DESCRIPTION: HARNESS, Z AXIS, 1CN TO MX4/TB1

| DRAWN | DATE | CHECKED | DATE | APPROVED | DATE |
|---|---|---|---|---|---|
| ROD | 11-28-02 | | | | |

| SCALE | SIZE | DRAWING | SHT. | REV. |
|---|---|---|---|---|
| NONE | C | 423-4401-866 | 1 OF 1 | A |

UNIT OF MEAS: EA

| SIZE | DRAWING | SHT. | REV. |
|---|---|---|---|
| B | 423–4401–955 | 1 OF 1 | A |

PROPRIETARY INFORMATION
INFORMATION CONTAINED HEREIN IS THE PROPERTY OF HURCO MANUFACTURING COMPANY, INC. NO REPRODUCTION OR DISCLOSURE OF THIS INFORMATION SHALL BE MADE BY THE RECIPIENT TO ANY OTHER PERSON OR ORGANIZATION WITHOUT THE PRIOR WRITTEN CONSENT OF HURCO MANUFACTURING COMPANY, INC.

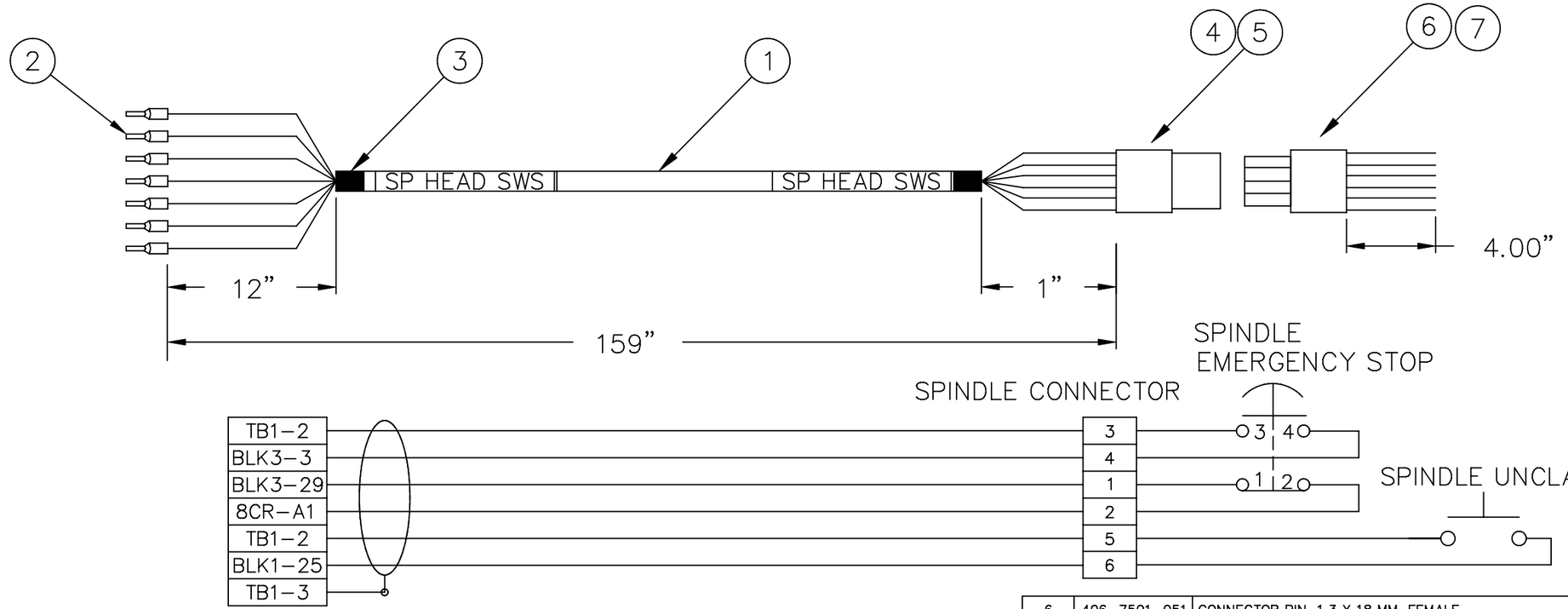


NOTES:
1. MARK HARNESS WITH HURCO PART NUMBER AND REVISION.
2. OVERALL DIMENSION IS STRAIGHT LINE LENGTH OF HARNESS, +1”.
3. LABEL CONNECTORS AS SHOWN.

PARTS LIST

| QTY. | PART NUMBER | ITEM DESCRIPTION | ITEM |
|---|---|---|---|
| 6 | 406–7501–051 | CONNECTOR PIN, 1.3 X 18 MM, FEMALE | 7 |
| 1 | 406–0804–063 | SOCKET, PLUG 6POS JST | 6 |
| 1 | 406–0804–062 | SOCKET, RECEPTACLE 6 POS JST | 5 |
| 6 | 406–7501–050 | CONNECTOR PIN, 1.3 X 18 MM, MALE | 4 |
| 2” | 406–6481–003 | HEATSHRINK, 3/16” BLACK | 3 |
| 7 | 406–0965–002 | FERRULE, 20AWG LT YELLOW | 2 |
| 163” | 406–1243–022 | CABLE, 8/COND 24AWG SHLD | 1 |

| REV | P.I.N. NO. | REVISION DESCRIPTION | REV BY | DATE | CHK BY | DATE | APPD BY | DATE | DF |
|---|---|---|---|---|---|---|---|---|---|
| A | 15724 | RELEASE | | | | | | | |

SURFACE TREATMENT ~
HEAT TREATMENT ~
FIRST USED ON VM1

EXCEPT AS NOTED: ALL CORNERS MUST BE AS FOLLOWS
INSIDE: .050” X 45° OR .05” R MAX
OUTSIDE: .030” X 45° OR .05” R

EXCEPT AS NOTED: ALL DIMENSIONS IN INCHES TOLERANCE
DECIMAL
.0 ±.0300
.00 ±.0150
.000 ±.0050
.0000 ±.0005
ANGULAR ± 0°30’

EXCEPT AS NOTED: WELDING TOLERANCE MUST BE AS FOLLOWS ±.12

THIRD ANGLE PROJECTION

HURCO MANUFACTURING COMPANY, INC.
INDIANAPOLIS, IN U.S.A.

DESCRIPTION: HARNESS, SPINDLE HEAD SWS

| SAR | DATE | CHECKED | DATE | APPROVED | DATE |
|---|---|---|---|---|---|
| SAR | 5–13–04 | DEO | 5–15–04 | DEO | 5–15–04 |

| SCALE | SIZE | DRAWING | SHT. | REV. |
|---|---|---|---|---|
| NONE | B | 423–4401–955 | 1 OF 1 | A |

UNIT OF MEAS. EA.

# Harness, Oil Chiller Interface, 423-4401-984—Rev. B

| SIZE | DRAWING | SHT. | REV. |
|---|---|---|---|
| C | 423-4401-984 | 1 OF 1 | B |

PROPRIETARY INFORMATION
INFORMATION CONTAINED HEREIN IS THE PROPERTY OF HURCO MANUFACTURING COMPANY, INC. NO REPRODUCTION OR DISCLOSURE OF THIS INFORMATION SHALL BE MADE BY THE RECIPIENT TO ANY OTHER PERSON OR ORGANIZATION WITHOUT THE PRIOR WRITTEN CONSENT OF HURCO MANUFACTURING COMPANY, INC.

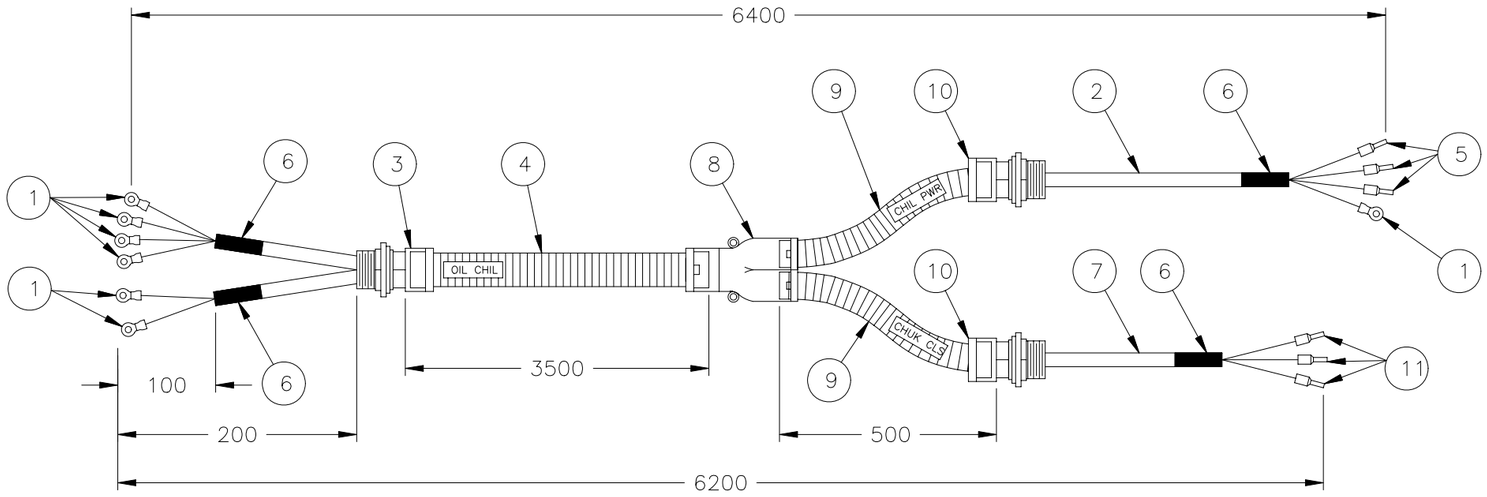


NOTE:
1) DIMENSIONS ARE SHOWN AS MILLIMETERS.
2) WIRE COLOR CODES ARE AT VENDOR DISCRETION, COLORS SHOWN ARE SUGGESTIONS.
3) DIMENSIONS REFER TO STRAIGHT-LINE LENGTH, TOLERANCE +/-15mm.
4) FINISHED ASSEMBLY TO BE MARKED WITH THE HURCO PART NUMBER AND REVISION LETTER.
(B3) 5) LABEL CHILLER END CONDUCTORS WITH NUMBERED I.D. BANDS. USE THE LABELS SHOWN (E.G., 11,12)

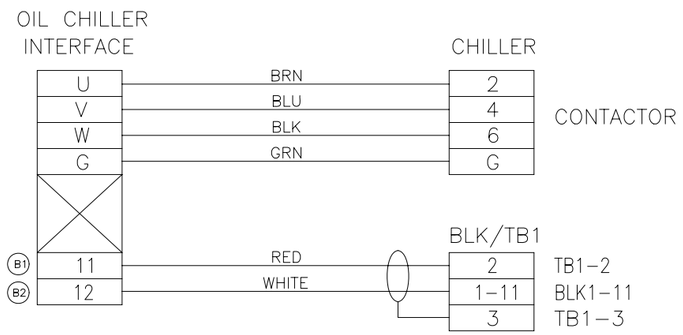


| QTY. | PART NUMBER | ITEM DESCRIPTION | ITEM |
|---|---|---|---|
| 3 | 406-0965-014 | FERRULE, 24AWG LT YELLOW | 11 |
| 2 | 408-0171-061 | FITTING, PG11 CONDUIT 3/8" | 10 |
| 1000mm | 408-0171-056 | CONDUIT, 3/8" BLACK FLEXIBLE | 9 |
| 1 | 408-0171-086 | FITTING, Y TYPE, PG16 TO PG11 X 2 | 8 |
| 6205mm | 406-1245-007 | CABLE, 2/COND 24 AWG SHLD | 7 |
| 100mm | 406-6481-004 | HEATSHRINK 1/4" BLACK | 6 |
| 6 | 780-0002-006 | PIN TONGUE, 1.5 SQ MM-F | 5 |
| 3500mm | 408-0171-055 | CONDUIT, 1/2" BLACK FLEXIBLE | 4 |
| 1 | 408-0171-060 | FITTING, PG16 CONDUIT | 3 |
| 6405mm | 780-0001-009 | CABLE, 4-COND, 1.25 SQ MM | 2 |
| 7 | 780-0002-004 | RING TONGUE, 1.25-5R | 1 |

PARTS LIST

| REV | P.I.N. NO. | REVISION DESCRIPTION | REV BY | DATE | CHK BY | DATE | APPD BY | DATE | DF |
|---|---|---|---|---|---|---|---|---|---|
| B | 15831 | 1) WAS 95; 2) WAS 93; 3) ADDED NOTE 5 | SJT | 6 24 05 | DEO | 6 27 05 | DEO | 6 27 05 | |
| A | 15712 | RELEASE | | | | | | | |

SURFACE TREATMENT

HEAT TREATMENT

FIRST USED ON
VM1G

EXCEPT AS NOTED: ALL CORNERS MUST BE AS FOLLOWS
INSIDE: 1.3 X 45° OR 1.3 R MAX
OUTSIDE: 0.8 X 45° OR 1.3 R

EXCEPT AS NOTED: WELDING TOLERANCE MUST BE AS FOLLOWS ±3

EXCEPT AS NOTED: ALL DIMENSIONS IN METRIC TOLERANCE
DECIMAL
.0 ±0.8
.00 ±0.4
.000 ±0.13
.0000 ±0.013
ANGULAR ± 0°30'

THIRD ANGLE PROJECTION

HURCO MANUFACTURING COMPANY, INC.
INDIANAPOLIS, IN U.S.A.

DESCRIPTION
HARNESS, OIL CHILLER INTERFACE

| DRAWN | DATE | CHECKED | DATE | APPROVED | DATE |
|---|---|---|---|---|---|
| ROD | 30OCT04 | SJT | 08NOV04 | — | — |

| SCALE | SIZE | DRAWING | SHT. | REV. |
|---|---|---|---|---|
| NONE | C | 423-4401-984 | 1 OF 1 | B |

UNIT OF MEAS. EA

M

| SIZE | DRAWING | SHT. | REV. |
|---|---|---|---|
| C | 423-4401-993 | 1 OF 1 | A |

PROPRIETARY INFORMATION
INFORMATION CONTAINED HEREIN IS THE PROPERTY OF HURCO MANUFACTURING COMPANY, INC. NO REPRODUCTION OR DISCLOSURE OF THIS INFORMATION SHALL BE MADE BY THE RECIPIENT TO ANY OTHER PERSON OR ORGANIZATION WITHOUT THE PRIOR WRITTEN CONSENT OF HURCO MANUFACTURING COMPANY, INC.

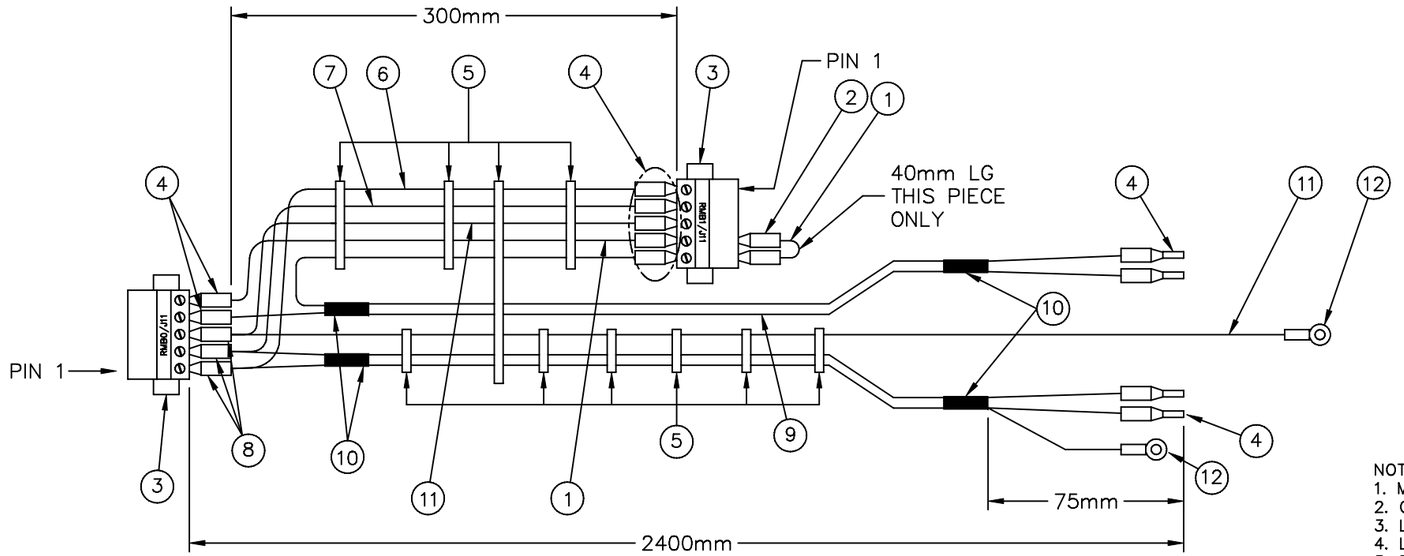


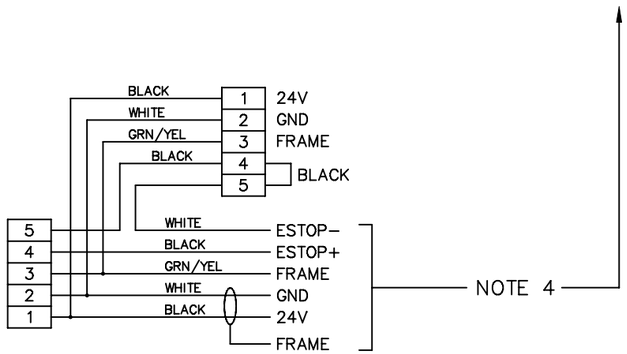


NOTES:
1. MARK HARNESS WITH HURCO PART NUMBER AND REVISION.
2. OVERALL DIMENSION IS STRAIGHT LINE LENGTH, +25mm.
3. LABEL CONNECTORS AS SHOWN.
4. LABEL 6 WIRES PER SCHEMATIC.
5. PRELIMINARY VERSION WAS 1830MM LG & INCREASED STRIP LENGTH 75MM & SWAPPED WIRE COLORS ON 24V & GROUND.

PARTS LIST

| QTY. | PART NUMBER | ITEM DESCRIPTION | ITEM |
|---|---|---|---|
| 1 | 406-7001-006 | RING TONGUE, #6, 18 AWG | 12 |
| 2700mm | 406-2005-030 | WIRE, 18 AWG, GREEN/YELLOW | 11 |
| 100mm | 406-6481-005 | SHRINK TUBE, 3/8" BLACK | 10 |
| 5100mm | 406-1242-002 | CABLE, 1 PAIR, 18 AWG SHLD | 9 |
| 3 | 406-0965-007 | FERRULE, 14 AWG | 8 |
| 300mm | 406-2005-028 | WIRE, 18 AWG, GRAY | 7 |
| 300mm | 406-2005-026 | WIRE, 18 AWG, BLUE | 6 |
| 10 | 406-5001-003 | TIE WRAP, SMALL | 5 |
| 11 | 406-0965-003 | FERRULE, 18 AWG | 4 |
| 2 | 406-0814-022 | CONNECTOR, FEMALE 5-POSITION | 3 |
| 2 | 406-0965-002 | FERRULE, 20AWG GRAY | 2 |
| 350mm | 406-2005-020 | WIRE, 18 AWG, BLACK | 1 |

| REV | P.I.N. NO. | REVISION DESCRIPTION | REV BY | DATE | CHK BY | DATE | APPD BY | DATE | DF |
|---|---|---|---|---|---|---|---|---|---|
| A | 15829 | RELEASE: INCREASED STRIP LENGTH 75MM, SWAPPED WIRE COLORS ON 24V & GROUND. | | | | | | | |
| – | – | PRELIMINARY: OVERALL LENGTH WAS 1830MM | | | | | | | |

SURFACE TREATMENT ~
HEAT TREATMENT ~
FIRST USED ON Mill

EXCEPT AS NOTED: ALL CORNERS MUST BE AS FOLLOWS
INSIDE: .050" X 45° OR .05" R MAX
OUTSIDE: .030" X 45° OR .05" R

EXCEPT AS NOTED: ALL DIMENSIONS IN INCHES
TOLERANCE
DECIMAL .0 ±.0300, .00 ±.0150, .000 ±.0050, .0000 ±.0005
ANGULAR ± 0°30'

EXCEPT AS NOTED: WELDING TOLERANCE MUST BE AS FOLLOWS ±.12

THIRD ANGLE PROJECTION

HURCO MANUFACTURING COMPANY, INC.
INDIANAPOLIS, IN U.S.A.

DESCRIPTION: HARNESS, RMB DUAL DC POWER

| DRAWN | DATE | CHECKED | DATE | APPROVED | DATE |
|---|---|---|---|---|---|
| SMc | 6/1/05 | FG | 6-3-05 | FG | 6-3-05 |

| SCALE | SIZE | DRAWING | SHT. | REV. |
|---|---|---|---|---|
| NONE | C | 423-4401-993 | 1 OF 1 | A |

UNIT OF MEAS. EA

# Harness, RMB, IOIF J2, 423-4401-996—Rev. A

| SIZE | DRAWING | SHT. | REV. |
|---|---|---|---|
| C | 423-4401-996 | 1 OF 1 | A |

PROPRIETARY INFORMATION
INFORMATION CONTAINED HEREIN IS THE PROPERTY OF HURCO MANUFACTURING COMPANY, INC. NO REPRODUCTION OR DISCLOSURE OF THIS INFORMATION SHALL BE MADE BY THE RECIPIENT TO ANY OTHER PERSON OR ORGANIZATION WITHOUT THE PRIOR WRITTEN CONSENT OF HURCO MANUFACTURING COMPANY, INC.

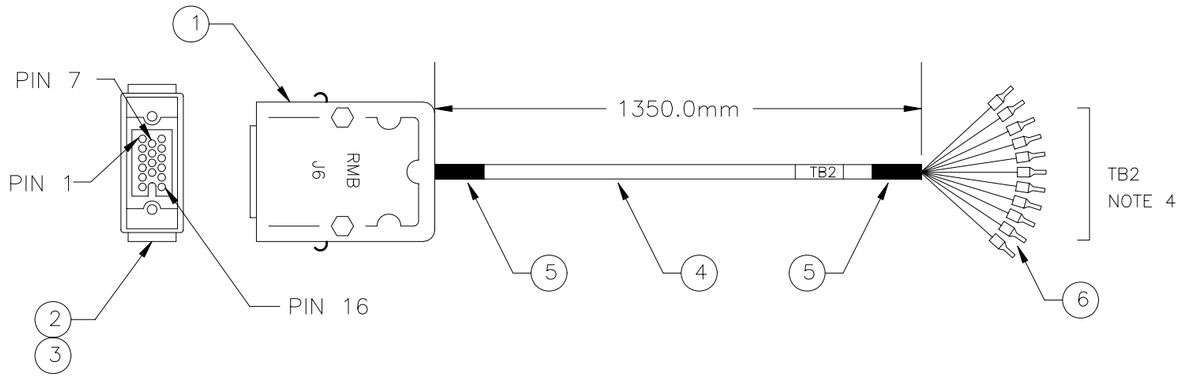


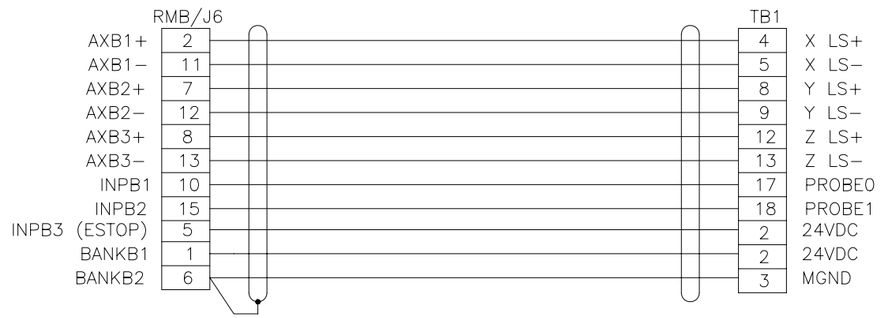


NOTES:
1. MARK HARNESS WITH HURCO PART NUMBER AND REVISION.
2. OVERALL DIMENSION IS STRAIGHT LINE LENGTH, +25mm.
3. LABEL CONNECTOR AS SHOWN.
4. STRIP LENGTH IS 250mm. ALSO LABEL EACH WIRE END AS TB1−xx.

PARTS LIST

| QTY. | PART NUMBER | ITEM DESCRIPTION | ITEM |
|---|---|---|---|
| 11 | 406-0965-014 | FERRULE, 24AWG LT YELLOW | 6 |
| 100mm | 406-6481-005 | SHRINK TUBE, 3/8" BLACK | 5 |
| 1350mm | 406-1248-001 | CABLE, 15/COND, 24AWG SHLD | 4 |
| 13 | 406-0811-010 | CONTACT, FEMALE SILVER | 3 |
| 1 | 406-0811-013 | INSULATOR, 16-POS FEMALE | 2 |
| 1 | 406-0811-002 | CASE, VERTICAL/HORIZONTAL 16POS | 1 |

| REV | P.I.N. NO. | REVISION DESCRIPTION | REV BY | DATE | CHK BY | DATE | APPD BY | DATE | DF |
|---|---|---|---|---|---|---|---|---|---|
| A | 15851 | RELEASE | | | | | | | |

SURFACE TREATMENT

HEAT TREATMENT

FIRST USED ON
VM1

EXCEPT AS NOTED: ALL CORNERS MUST BE AS FOLLOWS
INSIDE: .050" X 45° OR .05" R MAX
OUTSIDE: .030" X 45° OR .05" R

EXCEPT AS NOTED: WELDING TOLERANCE MUST BE AS FOLLOWS ±.12

EXCEPT AS NOTED: ALL DIMENSIONS IN INCHES TOLERANCE
DECIMAL
.0 ±.0300
.00 ±.0150
.000 ±.0050
.0000 ±.0005
ANGULAR ± 0°30'

THIRD ANGLE PROJECTION

HURCO MANUFACTURING COMPANY, INC.
INDIANAPOLIS, IN U.S.A.

DESCRIPTION: HARNESS, RMB, IOIF J2

| DRAWN | DATE | CHECKED | DATE | APPROVED | DATE |
|---|---|---|---|---|---|
| DEO | 10MAY05 | SJT | 12MAY05 | DEO | 18MAY05 |

| SCALE | SIZE | DRAWING | SHT. | REV. |
|---|---|---|---|---|
| NONE | C | 423-4401-996 | 1 OF 1 | A |

UNIT OF MEAS: EA

| SIZE | DRAWING | SHT. | REV. |
|---|---|---|---|
| C | 423-4401-997 | 1 OF 1 | A |

PROPRIETARY INFORMATION

INFORMATION CONTAINED HEREIN IS THE PROPERTY OF HURCO MANUFACTURING COMPANY, INC. NO REPRODUCTION OR DISCLOSURE OF THIS INFORMATION SHALL BE MADE BY THE RECIPIENT TO ANY OTHER PERSON OR ORGANIZATION WITHOUT THE PRIOR WRITTEN CONSENT OF HURCO MANUFACTURING COMPANY, INC.

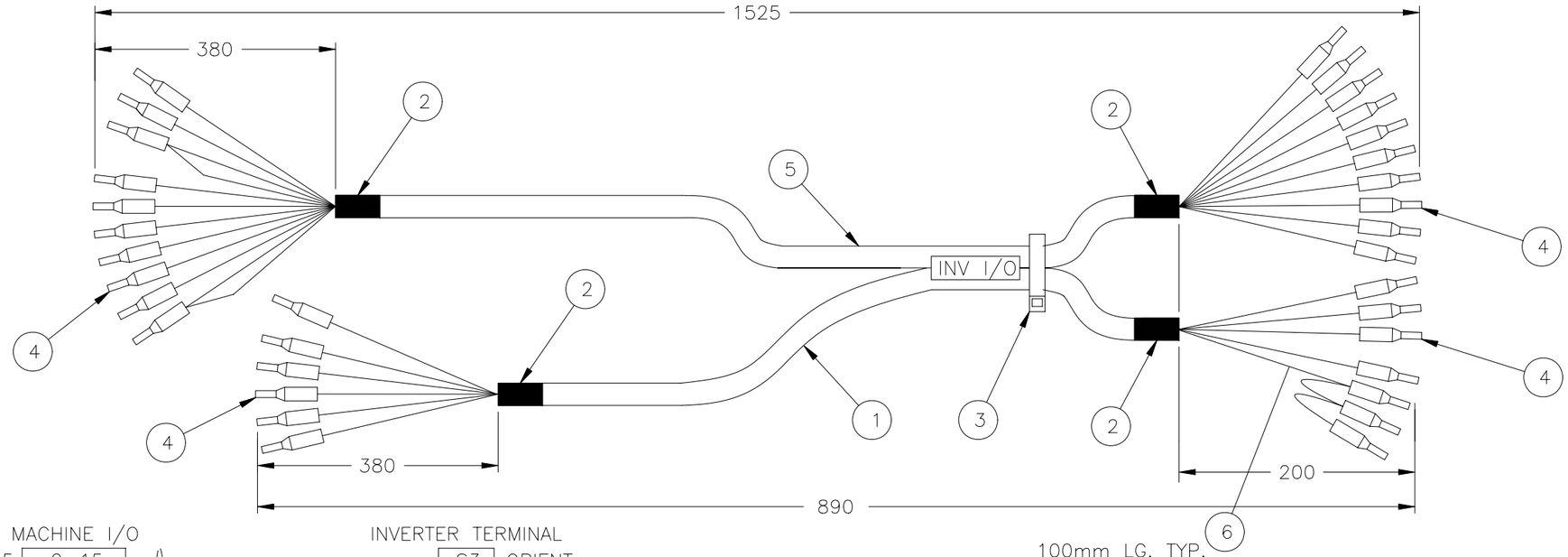


| MACHINE I/O | | INVERTER TERMINAL | |
|---|---|---|---|
| BLK2-15 | 2-15 | S3 | ORIENT |
| BLK2-1 | 2-1 | S4 | RESET |
| BLK2-14 | 2-14 | S5 | TAP ACC/DEC |
| | | S6 | SPD CONTROL |
| BLK3-19 | 3-19 | AM | LOAD METER |
| BLK3-20 | 3-20 | AC | ANALOG COMMON |
| BLK1-28 | 1-28 | M3 | ORT CMP OUTPUT |
| BLK3-6 | 3-6 | M1 | SPD AGR OUTPUT |
| BLK3-12 | 3-12 | M5 | ZERO SPEED OUTPUT |
| BLK1-9 | 1-9 | MB | SPINDLE FAULT |
| TB1-3 | 3 | SC | ANALOG COMMON |
| | | | |
| TDR-18 | TDR-18 | S8 | EXT BASEBLOCK N.C. |
| 2CR-14 | 2R14 | S1 | FWD |
| TB1-1 | 1 | S7 | INV ENABLE |
| TB1-3 | 3 | M2 | SPD AGR COMMOM |
| TB1-2 | 2 | MC | SPD FLT COMMON |
| TB1-3 | 3 | M4 | ORT CMP COMMON |
| | | M6 | ZERO SPEED COMMON |

NOTE:
1) DIMENSIONS ARE SHOWN AS MILLIMETERS.
2) WIRE COLOR CODES ARE AT VENDOR DISCRETION, COLORS SHOWN ARE SUGGESTIONS.
3) DIMENSIONS REFER TO STRAIGHT-LINE LENGTH, TOLERANCE +/-15mm.
4) FINISHED ASSEMBLY TO BE MARKED WITH THE HURCO PART NUMBER AND REVISION LETTER.

PARTS LIST

| QTY. | PART NUMBER | ITEM DESCRIPTION | ITEM |
|---|---|---|---|
| 200mm | 406-2017-006 | WIRE, 24AWG BLUE | 6 |
| 1525mm | 406-1247-093 | CABLE, 24GA, 15-COND, SHLD | 5 |
| 33 | 406-0965-014 | FERRULE, 24AWG LIGHT YELLOW | 4 |
| 1 | 406-5001-003 | TIE WRAP SMALL | 3 |
| 100mm | 406-6481-004 | HEATSHRINK, 1/4" BLACK | 2 |
| 890mm | 406-1244-009 | CABLE, 24GA, 6-COND, SHLD | 1 |

| REV | P.I.N. NO. | REVISION DESCRIPTION | REV BY | DATE | CHK BY | DATE | APPD BY | DATE | DF |
|---|---|---|---|---|---|---|---|---|---|
| A | 15851 | RELEASE | | | | | | | |

SURFACE TREATMENT

HEAT TREATMENT

FIRST USED ON: VM1

EXCEPT AS NOTED: ALL CORNERS MUST BE AS FOLLOWS
INSIDE: 1.3 X 45° OR 1.3 R MAX
OUTSIDE: 0.8 X 45° OR 1.3 R

EXCEPT AS NOTED: WELDING TOLERANCE MUST BE AS FOLLOWS ±3

EXCEPT AS NOTED: ALL DIMENSIONS IN METRIC TOLERANCE
DECIMAL
.0 ±0.8
.00 ±0.4
.000 ±0.13
.0000 ±0.013
ANGULAR ± 0°30'

THIRD ANGLE PROJECTION

HURCO MANUFACTURING COMPANY, INC.
INDIANAPOLIS, IN U.S.A.

DESCRIPTION: HARNESS, SPINDLE I/O SIGNAL

| DRAWN | DATE | CHECKED | DATE | APPROVED | DATE |
|---|---|---|---|---|---|
| ROD | 26MAR05 | DEO | 14MAY05 | DEO | 18MAY05 |

| SCALE | SIZE | DRAWING | SHT. | REV. |
|---|---|---|---|---|
| NONE | C | 423-4401-997 | 1 OF 1 | A |

UNIT OF MEAS: EA

M

# Harness, Axis Motor Encoder VMX 24/30, 423-4405-111—Rev. C

| SIZE | DRAWING | SHT. | REV. |
|---|---|---|---|
| C | −109<br>423−4405−110<br>−111 | 1<br>OF 1 | C |

PROPRIETARY INFORMATION
INFORMATION CONTAINED HEREIN IS THE PROPERTY OF HURCO MANUFACTURING COMPANY, INC. NO REPRODUCTION OR DISCLOSURE OF THIS INFORMATION SHALL BE MADE BY THE RECIPIENT TO ANY OTHER PERSON OR ORGANIZATION WITHOUT THE PRIOR WRITTEN CONSENT OF HURCO MANUFACTURING COMPANY, INC.

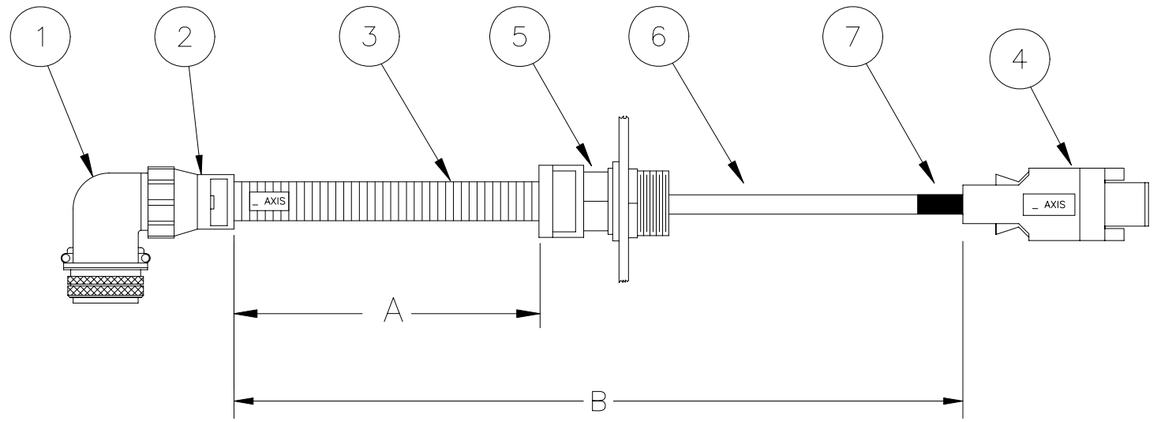


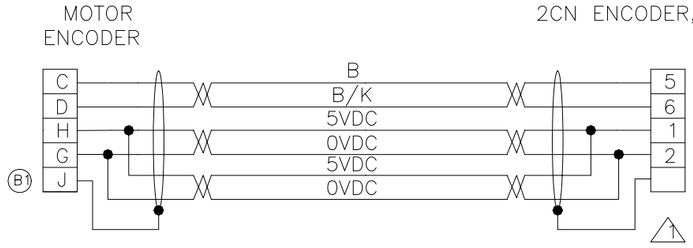


| DIM. | Z AXIS −111 | Y AXIS −110 | X AXIS −109 |
|---|---|---|---|
| A | 43'' (C1) | 28'' (C3) | 146'' (C5) |
| B | 110'' (C2) | 95'' (C4) | 213'' (C6) |

NOTE 1 CONNECT SHIELD TO CONNECTOR SHELL.

| | QTY. −111 Z AXIS | QTY. −110 Y AXIS | QTY. −109 X AXIS | PART NUMBER | ITEM DESCRIPTION | ITEM |
|---|---|---|---|---|---|---|
| | 2'' | 2'' | 2'' | 780−0003−004 | HEATSHRINK, 10MM DIA | 7 |
| C2 C4 C6 | 112'' | 97'' | 215'' | 406−1247−095 | CABLE, 3 PR SHIELDED, 24AWG | 6 |
| | 1 | 1 | 1 | 408−0171−060 | FITTING, PG16 CONDUIT | 5 |
| | 1 | 1 | 1 | 406−0801−211 | CONNECTOR, MOLEX | 4 |
| C1 C3 C5 | 45'' | 30'' | 148'' | 408−0171−055 | CONDUIT, PG 16 BLACK FLEXIBLE | 3 |
| | 1 | 1 | 1 | 408−0171−065 | ADAPTER, 1 3/16''−18 − 16MM CONDUIT | 2 |
| | 1 | 1 | 1 | 406−0321−018 | CONNECTOR, 90 DEG ANGLE (20−29S) | 1 |

PARTS LIST

| REV | E.C.N. NO. | REVISION DESCRIPTION | REV BY | DATE | CHK BY | DATE | APPD BY | DATE | DF |
|---|---|---|---|---|---|---|---|---|---|
| C | 15237 | 6)WAS 231''<br>1) WAS 48'', (2)WAS 118'', (3)WAS 44'', (4)WAS 154'', (5)WAS 126'', | ROD | 8 MAR 01 | DEO | 9 APR 01 | | | |
| B | 151981 | 1) WAS MOTOR ENCODER PIN ''N''. | DEO | 25 JAN 01 | SJT | 26 JAN 01 | | | |
| A | 14905 | RELEASE | | | | | | | |

SURFACE TREATMENT

HEAT TREATMENT

FIRST USED ON
VMX24
VMX30

EXCEPT AS NOTED: ALL DIMENSIONS IN INCHES
TOLERANCE
DECIMAL
.0 ±.0300
.00 ±.0150
.000 ±.0050
.0000 ±.0005
ANGULAR ± 0°30'

THIRD ANGLE PROJECTION

HURCO MANUFACTURING COMPANY, INC.
INDIANAPOLIS, IN U.S.A.

DESCRIPTION
HARNESS, AXIS MOTOR ENCODER VMX 24/30

| DRAWN | DATE | CHECKED | DATE | APPROVED | DATE |
|---|---|---|---|---|---|
| SAW | 17SEP99 | DEO | 20SEP99 | | |

| SCALE | SIZE | DRAWING | SHT. | REV. |
|---|---|---|---|---|
| NONE | C | −109<br>423−4405−110<br>−111 | 1<br>OF 1 | C |

UNIT OF MEAS
EA

| SIZE | DRAWING | SHT. | REV. | PROPRIETARY INFORMATION |
|---|---|---|---|---|
| C | 423-4405-259 | 1 OF 1 | A | INFORMATION CONTAINED HEREIN IS THE PROPERTY OF HURCO MANUFACTURING COMPANY, INC. NO REPRODUCTION OR DISCLOSURE OF THIS INFORMATION SHALL BE MADE BY THE RECIPIENT TO ANY OTHER PERSON OR ORGANIZATION WITHOUT THE PRIOR WRITTEN CONSENT OF HURCO MANUFACTURING COMPANY, INC. |

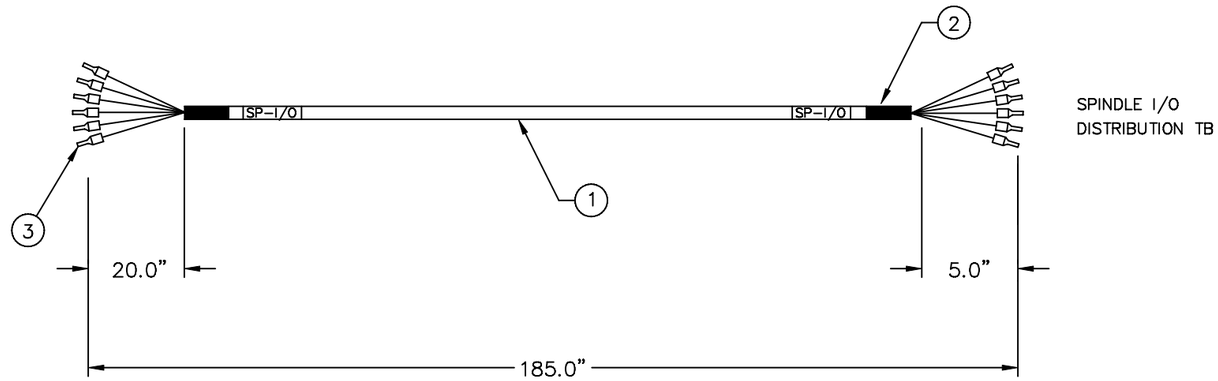


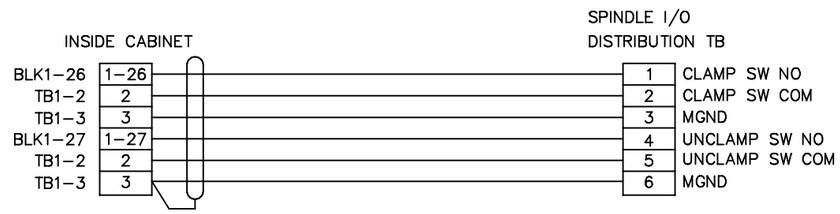


NOTES:
1. MARK HARNESS WITH HURCO PART NUMBER AND REVISION.
2. OVERALL DIMENSION IS STRAIGHT LINE LENGTH, +1".
3. LABEL CONNECTOR AS SHOWN.
4. STRIP LENGTH AS SHOW.

| QTY. | PART NUMBER | ITEM DESCRIPTION | ITEM |
|---|---|---|---|
| 4 | 406-0965-002 | FERRULE, 20AWG LT YELLOW | 4 |
| 12 | 406-0965-013 | FERRULE, 22AWG LT GREEN | 3 |
| 4" | 406-6481-005 | SHRINK TUBE, 3/8" BLACK | 2 |
| 185" | 406-1246-XXX | CABLE, 10/COND, 22AWG SHLD | 1 |

PARTS LIST

| REV | P.I.N. NO. | REVISION DESCRIPTION | REV BY | DATE | CHK BY | DATE | APPD BY | DATE | DF |
|---|---|---|---|---|---|---|---|---|---|
| A | 15896 | RELEASE | | | | | | | |

SURFACE TREATMENT
HEAT TREATMENT
FIRST USED ON: VM1

EXCEPT AS NOTED: ALL CORNERS MUST BE AS FOLLOWS
INSIDE: .050" X 45° OR .05" R MAX
OUTSIDE: .030" X 45° OR .05" R

EXCEPT AS NOTED: WELDING TOLERANCE MUST BE AS FOLLOWS ±.12

EXCEPT AS NOTED: ALL DIMENSIONS IN INCHES TOLERANCE
DECIMAL
.0 ±.0300
.00 ±.0150
.000 ±.0050
.0000 ±.0005
ANGULAR ± 0°30'

THIRD ANGLE PROJECTION

HURCO MANUFACTURING COMPANY, INC.
INDIANAPOLIS, IN U.S.A.

DESCRIPTION: HARNESS, SPINDLE HEAD I/O SIGNAL

| DRAWN | DATE | CHECKED | DATE | APPROVED | DATE |
|---|---|---|---|---|---|
| ROD | 25FEB05 | SAR | 10OCT05 | DEO | 10OCT05 |

| SCALE | SIZE | DRAWING | SHT. | REV. |
|---|---|---|---|---|
| NONE | C | 423-4405-259 | 1 OF 1 | A |

UNIT OF MEAS: EA

| SIZE | DRAWING | SHT. | REV. |
|---|---|---|---|
| B | 423-4405-260 | 1 OF 1 | A |

PROPRIETARY INFORMATION
INFORMATION CONTAINED HEREIN IS THE PROPERTY OF HURCO MANUFACTURING COMPANY, INC. NO REPRODUCTION OR DISCLOSURE OF THIS INFORMATION SHALL BE MADE BY THE RECIPIENT TO ANY OTHER PERSON OR ORGANIZATION WITHOUT THE PRIOR WRITTEN CONSENT OF HURCO MANUFACTURING COMPANY, INC.

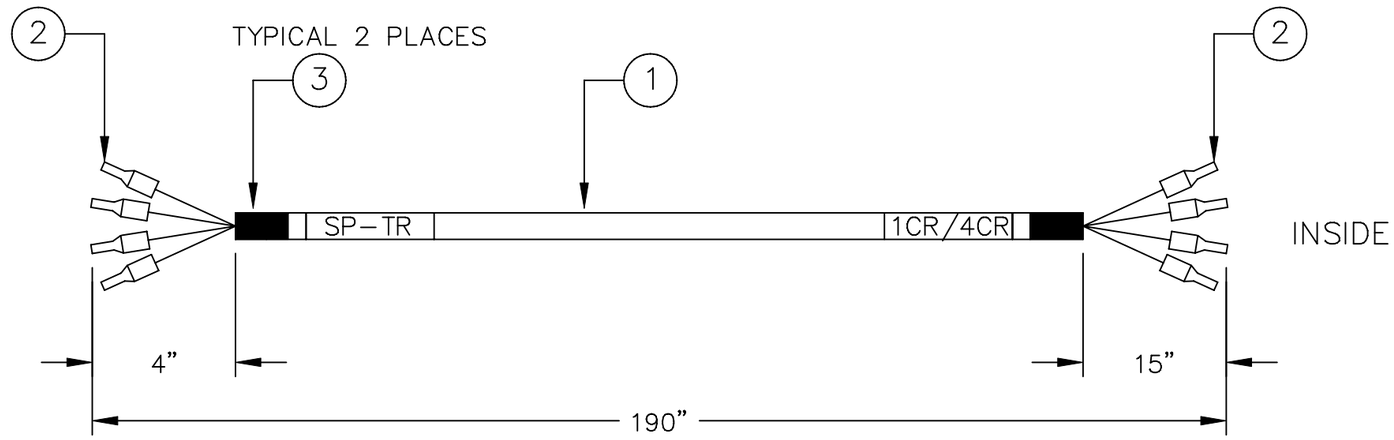


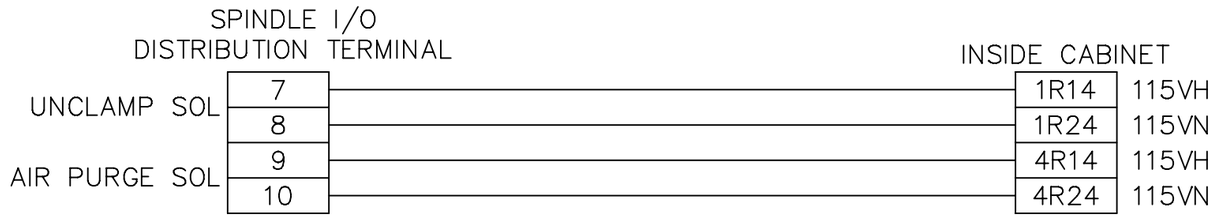


NOTES:
1. MARK HARNESS WITH HURCO PART NUMBER AND REVISION.
2. OVERALL DIMENSION IS STRAIGHT LINE LENGTH OF HARNESS, ±1".
3. LABEL CABLE AS SHOWN.

| QTY. | PART NUMBER | ITEM DESCRIPTION | ITEM |
|---|---|---|---|
| | | PARTS LIST | |
| 2" | 406-6481-004 | HEATSHRINK, 1/4" BLACK | 3 |
| 12 | 406-0965-003 | FERRULE, 18AWG LT BLUE | 2 |
| 190" | 406-1328-001 | CABLE, 6/COND 18AWG UNSHLD | 1 |

| REV | P.I.N. NO. | REVISION DESCRIPTION | REV BY | DATE | CHK BY | DATE | APPD BY | DATE | DF |
|---|---|---|---|---|---|---|---|---|---|
| A | 15896 | RELEASE | | | | | | | |

SURFACE TREATMENT ~

HEAT TREATMENT ~

FIRST USED ON VM1

EXCEPT AS NOTED: ALL CORNERS MUST BE AS FOLLOWS
INSIDE: .050" X 45° OR .05" R MAX
OUTSIDE: .030" X 45° OR .05" R

EXCEPT AS NOTED: WELDING TOLERANCE MUST BE AS FOLLOWS ±.12

EXCEPT AS NOTED: ALL DIMENSIONS IN INCHES TOLERANCE
DECIMAL
.0 ±.0300
.00 ±.0150
.000 ±.0050
.0000 ±.0005
ANGULAR ± 0°30'

THIRD ANGLE PROJECTION

HURCO MANUFACTURING COMPANY, INC.
INDIANAPOLIS, IN U.S.A.

DESCRIPTION: HARNESS, UNCLAMP/PURGE/BLR SOL

| DRAWN | DATE | CHECKED | DATE | APPROVED | DATE |
|---|---|---|---|---|---|
| ROD | 25FEB05 | SAR | 10OCT05 | DEO | 10OCT05 |

| SCALE | SIZE | DRAWING | SHT. | REV. |
|---|---|---|---|---|
| NONE | B | 423-4405-260 | 1 OF 1 | A |

UNIT OF MEAS. EA.

# Options

## Hurco VM1 Machining Center

### Rotary Table Option


Kit, Rotary Table Harnesses, Sigma II, VM1, . . . . . .002-4303-012—Rev. A . . . . Page 5 - 2
Harness, ISA/DSP TTL I/O, . . . . . .423-4400-002—Rev. B . . . . Page 5 - 3
Harness, ISA/DSP Servo I/O, . . . . .423-4400-006—Rev. B . . . . Page 5 - 4
Harness, ISA/DSP Sync, . . . . . .423-4400-011—Rev. B . . . . Page 5 - 5
Harness, Rotary Encoder, 90 Degree, Sigma II, VM1, . . .423-4401-922—Rev. B . . . . Page 5 - 6
Harness, Rotary Motor, 90 Degree, Sigma II, VM1, . . .423-4401-923—Rev. B . . . . Page 5 - 7
Harness, A-Axis, 1CN to MX4/TB1, .423-4401-933—Rev. C . . . . Page 5 - 8
Harness, IOIF J3, Sigma II, . . . . . .423-4401-934—Rev. B . . . . Page 5 - 9
Ass'y., 4th Axis Interface, (EUR), . . . . . .003-0102-009—Rev. A . . . . Page 5 - 10
Schematics, Electrical, Rotary Table,. . . . .003-2022-019—Rev. C . . . . Page 5 - 11


### Probing Option


Schematic, Renishaw Probes—Mach. Cntrs w/Siemens Spindle Systems,. . . . .007-3022-008—Rev. B . . . . Page 5 - 19
Schematic, Renishaw Probes—Mach. Cntrs w/Yaskawa Sigma Drives, . . . . . .007-3022-017—Rev. B . . . . Page 5 - 20
Schematic, Renishaw Laser Part Probe—Mach. Cntrs w/Yaskawa Sigma Drives, . . . . . .007-3022-018—Rev. B . . . . Page 5 - 21
Schematic, Blum Laser Part Probe—Mach. Cntrs w/Yaskawa Sigma Drives, . . . . . .007-3022-019—Rev. A . . . . Page 5 - 22
Schematic, Renishaw Probes—Mach. Cntrs (Pre-Sigma Drives), . . . . . .007-3022-020—Rev. A . . . . Page 5 - 23
Schematic, Renishaw Laser Part Probe—Mach. Cntrs (Pre-Sigma) Drives, . . . . . .007-3022-021—Rev. B . . . . Page 5 - 24
Schematic, Blum Laser Part Probe—Mach. Cntrs (Pre-Sigma) Drives, . . . . . .007-3022-022—Rev. A . . . . Page 5 - 25


### Other Options


Ass'y., Clear Dome, . . . . . .003-0101-004—Rev. D . . . . Page 5 - 26
Ass'y., Top Hood, Clear Plastic Dome, DSM,003-0101-005—Rev. B . . . . Page 5 - 27
Ass'y., Air Gun, Option,. . . . . .003-0101-008—Rev. C . . . . Page 5 - 28
Ass'y., Kit, CE Retrofit, . . . . . .003-0101-021—Rev. C . . . . Page 5 - 29
Ass'y., Kit, CE Retrofit, . . . . . .003-0101-021—Rev. C . . . . Page 5 - 30
Ass'y., Chip Removal, Option, . . . . . .003-0102-005—Rev. C . . . . Page 5 - 31
Ass'y., 4th Axis Interface (EUR), . . . . . .003-0102-009—Rev. A . . . . Page 5 - 32
Ass'y., 4th Axis Interface, . . . . . .003-0102-013—Rev. A . . . . Page 5 - 33
Ass'y., BT Swing Arm,. . . . . .003-0106-006—Rev. A . . . . Page 5 - 34
Ass'y., Flood Coolant, Option, . . . . . .003-0108-001—Rev. E . . . . Page 5 - 35
Ass'y., Flood Coolant, Option, . . . . . .003-0108-001—Rev. E . . . . Page 5 - 36
Ass'y., 10K Spindle, Pulleys & Encoder,. . .003-0108-002—Rev. C . . . . Page 5 - 37
Ass'y., Worklamp, Option,. . . . . .003-0108-004—Rev. B . . . . Page 5 - 38
Ass'y., Left Worklight, Option, VM2, . . . . .003-0208-006—Rev. A . . . . Page 5 - 39
Kit, Option, Keyboard, Max,. . . . . .007-0020-007—Rev. B . . . . Page 5 - 40
Kit, Option, Remote Jog, Max, . . . . . .007-0020-008—Rev. C . . . . Page 5 - 41
Ass'y., PCI/ISA P/B SOC370 128M CPU, . .007-3003-009—Rev. C . . . . Page 5 - 42
Ass'y., Auger Utility Box,. . . . . .410-2001-054—Rev. A . . . . Page 5 - 43
Ass'y., Flood Utility Box, . . . . . .410-2001-055—Rev. B . . . . Page 5 - 44
Cart, Chip,. . . . . .803-0121-010—Rev. A . . . . Page 5 - 45
Mat, Machine Front Floor, . . . . . .803-1036-013—Rev. C . . . . Page 5 - 46

| DRAWING | REV. | PROPRIETARY INFORMATION | EXCEPT AS NOTED: ALL CORNERS MUST BE AS FOLLOWS | |
|---|---|---|---|---|
| 002–4303–012 | A | INFORMATION CONTAINED HEREIN IS THE PROPERTY OF HURCO MANUFACTURING COMPANY, INC. NO REPRODUCTION OR DISCLOSURE OF THIS INFORMATION SHALL BE MADE BY THE RECIPIENT TO ANY OTHER PERSON OR ORGANIZATION WITHOUT THE PRIOR WRITTEN CONSENT OF HURCO MANUFACTURING COMPANY, INC. | INSIDE: 1.3 X 45° OR 1.3 R MAX<br>OUTSIDE: 0.8 X 45° OR 0.8 R | |

THIS KIT CONSISTS OF THE FOLLOWING PARTS:

| ITEM | PART NO. | DESCRIPTION: | QTY |
|---|---|---|---|
| 1 | 423–4401–922 | HARNESS, ROTARY ENCODER, 90 DEGREE, SIGMA II, VM1 | 1 |
| 2 | 423–4401–923 | HARNESS, ROTARY MOTOR, 90 DEGREE, SIGMA II, VM1 | 1 |
| 3 | 423–4401–933 | HARNESS, A–AXIS 1CN TO MX4/TB1, SIGMA II | 1 |
| 4 | 423–4401–934 | HARNESS, IOIF J3, SIGMA II | 1 |

| REV | ECN NO. | REVISION DESCRIPTION | REV BY | DATE | CHK BY | DATE | APPD BY | DATE | DF |
|---|---|---|---|---|---|---|---|---|---|
| A | 15636 | REL | | | | | | | |

SURFACE TREATMENT

HEAT TREATMENT

FIRST USED ON: VM1

EXCEPT AS NOTED: ALL DIMENSIONS IN INCHES
TOLERANCE
DECIMAL
.0 ±.0300
.00 ±.0150
.000 ±.0050
.0000 ±.0005
ANGULAR ±0°30'

THIRD ANGLE PROJECTION

HURCO MANUFACTURING COMPANY, INC.
INDIANAPOLIS, IN U.S.A.

DESCRIPTION: KIT, ROTARY TABLE HARNESSES, SIGMA II, VM1

| DRAWN | DATE | CHECKED | DATE | APPROVED | DATE |
|---|---|---|---|---|---|
| SJT | 25SEP03 | DEO | 26SEP03 | | |

| SCALE | SIZE | DRAWING | SHT. | REV. |
|---|---|---|---|---|
| NONE | A | 002–4303–012 | 1 OF 1 | A |

UNIT OF MEAS. EA.

| SIZE | DRAWING | SHT. | REV. |
|---|---|---|---|
| C | 423-4400-002 | 1 OF 1 | |

PROPRIETARY INFORMATION

INFORMATION CONTAINED HEREIN IS THE PROPERTY OF HURCO MANUFACTURING COMPANY, INC. NO REPRODUCTION OR DISCLOSURE OF THIS INFORMATION SHALL BE MADE BY THE RECIPIENT TO ANY OTHER PERSON OR ORGANIZATION WITHOUT THE PRIOR WRITTEN CONSENT OF HURCO MANUFACTURING COMPANY, INC.

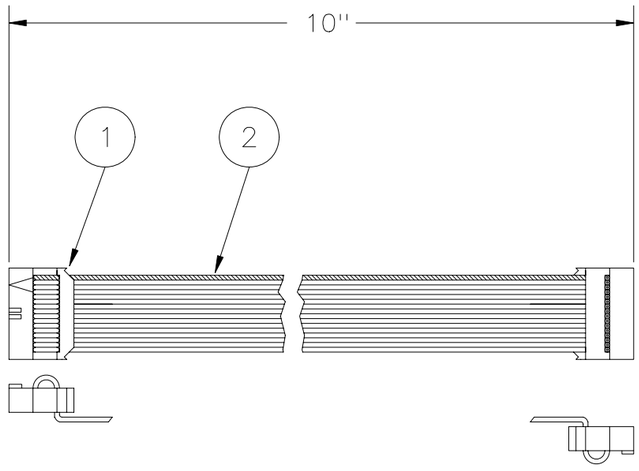


NOTES:
1. OVERALL DIMENSION IS STRAIGHT LINE LENGTH OF HARNESS, TOLERANCE OF ±1/4''
2. LABEL HARNESS WITH HURCO PART NUMBER.
3. PLACE RED STRIPE AT PIN 1, BOTH ENDS.

PARTS LIST

| QTY. | PART NUMBER | ITEM DESCRIPTION | ITEM |
|---|---|---|---|
| 11'' | 406-1560-011 | CABLE, GRAY 16-COND RIBBON | 2 |
| (B) 2 | 406-0806-019 | CONNECTOR, 16POS SCKT W/STRAIN RLF | 1 |

| REV | E.C.N. NO. | REVISION DESCRIPTION | REV BY | DATE | CHK BY | DATE | APPD BY | DATE | DF |
|---|---|---|---|---|---|---|---|---|---|
| B | 12943 | ITEM #1 WAS 406-0802-044 | DAB | 12/17/93 | | | | | |
| A | 12857 | ORIGINAL RELEASE | | | | | | | |

CN 8135

SURFACE TREATMENT

HEAT TREATMENT

FIRST USED ON: MAX3 ISA

EXCEPT AS NOTED: ALL DIMENSIONS IN INCHES
TOLERANCE
DECIMAL
.0 ±.0300
.00 ±.0150
.000 ±.0050
.0000 ±.0005
ANGULAR ± 0°30'
BREAK ALL SHARP EDGES

THIRD ANGLE PROJECTION

HURCO MANUFACTURING COMPANY, INC.
INDIANAPOLIS, IN U.S.A.

DESCRIPTION: HARNESS, ISA/DSP TTL I/O

| DRAWN | DATE | CHECKED | DATE | APPROVED | DATE |
|---|---|---|---|---|---|
| D.A.B. | 01NOV93 | M.F.C. | 05NOV93 | M.F.C. | 08NOV93 |

| SCALE | SIZE | DRAWING | SHT. | REV. |
|---|---|---|---|---|
| NONE | C | 423-4400-002 | 1 OF 1 | |

UNIT OF MEAS: PC

| SIZE | DRAWING | SHT. | REV. |
|---|---|---|---|
| C | 423-4400-006 | 1 OF 1 | |

PROPRIETARY INFORMATION

INFORMATION CONTAINED HEREIN IS THE PROPERTY OF HURCO MANUFACTURING COMPANY, INC. NO REPRODUCTION OR DISCLOSURE OF THIS INFORMATION SHALL BE MADE BY THE RECIPIENT TO ANY OTHER PERSON OR ORGANIZATION WITHOUT THE PRIOR WRITTEN CONSENT OF HURCO MANUFACTURING COMPANY, INC.

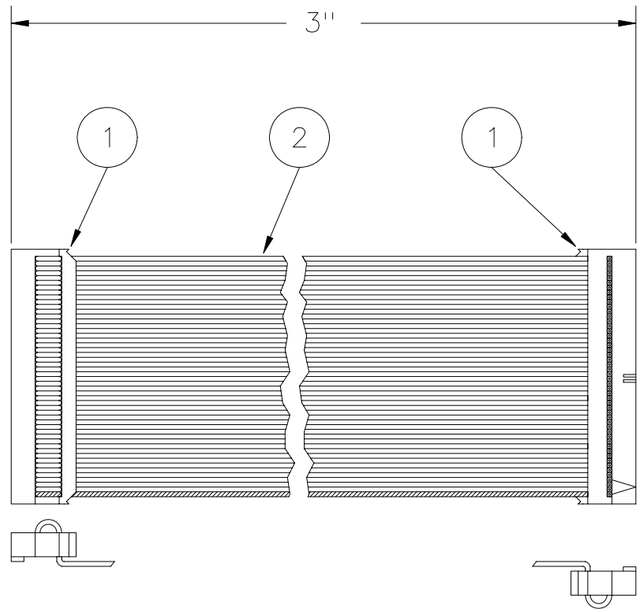


NOTES:
1. OVERALL DIMENSION IS STRAIGHT LINE LENGTH OF HARNESS, TOLERANCE OF ±1/4''.
2. LABEL HARNESS WITH HURCO PART NUMBER.
3. PLACE RED STRIPE AT PIN 1, BOTH ENDS.

| QTY. | PART NUMBER | ITEM DESCRIPTION | ITEM |
|---|---|---|---|
| | | PARTS LIST | |
| 4'' | 406-1560-019 | CABLE, GRAY 50-COND RIBBON | 2 |
| 2 | 406-0806-024 | CONNECTOR, 50 POS SCKT W/STRAIN RELIEF | 1 |

(B)

| REV | P.I.N. NO. | REVISION DESCRIPTION | REV BY | DATE | CHK BY | DATE | APPD BY | DATE | DF |
|---|---|---|---|---|---|---|---|---|---|
| B | 12943 | ITEM #1 WAS 406-0802-049 | DAB | 12/17/93 | | | | | |
| A | 12857 | ORIGINAL RELEASE | | | | | | | |

CN 8138

SURFACE TREATMENT

HEAT TREATMENT

FIRST USED ON: MAX3 ISA

EXCEPT AS NOTED: ALL DIMENSIONS IN INCHES
TOLERANCE
DECIMAL
.0 ±.0300
.00 ±.0150
.000 ±.0050
.0000 ±.0005
ANGULAR ± 0°30'
BREAK ALL SHARP EDGES

THIRD ANGLE PROJECTION

HURCO MANUFACTURING COMPANY, INC.
INDIANAPOLIS, IN U.S.A.

DESCRIPTION: HARNESS, ISA/DSP SERVO I/O

| DRAWN | DATE | CHECKED | DATE | APPROVED | DATE |
|---|---|---|---|---|---|
| D.A.B. | 01NOV93 | M.F.C. | 05NOV93 | M.F.C. | 08NOV93 |

| SCALE | SIZE | DRAWING | SHT. | REV. |
|---|---|---|---|---|
| NONE | C | 423-4400-006 | 1 OF 1 | |

UNIT OF MEAS: PC

| SIZE | DRAWING | SHT. | REV. | PROPRIETARY INFORMATION |
|---|---|---|---|---|
| B | 423-4400-011 | 1 OF 1 | | INFORMATION CONTAINED HEREIN IS THE PROPERTY OF HURCO MANUFACTURING COMPANY, INC. NO REPRODUCTION OR DISCLOSURE OF THIS INFORMATION SHALL BE MADE BY THE RECIPIENT TO ANY OTHER PERSON OR ORGANIZATION WITHOUT THE PRIOR WRITTEN CONSENT OF HURCO MANUFACTURING COMPANY, INC. |

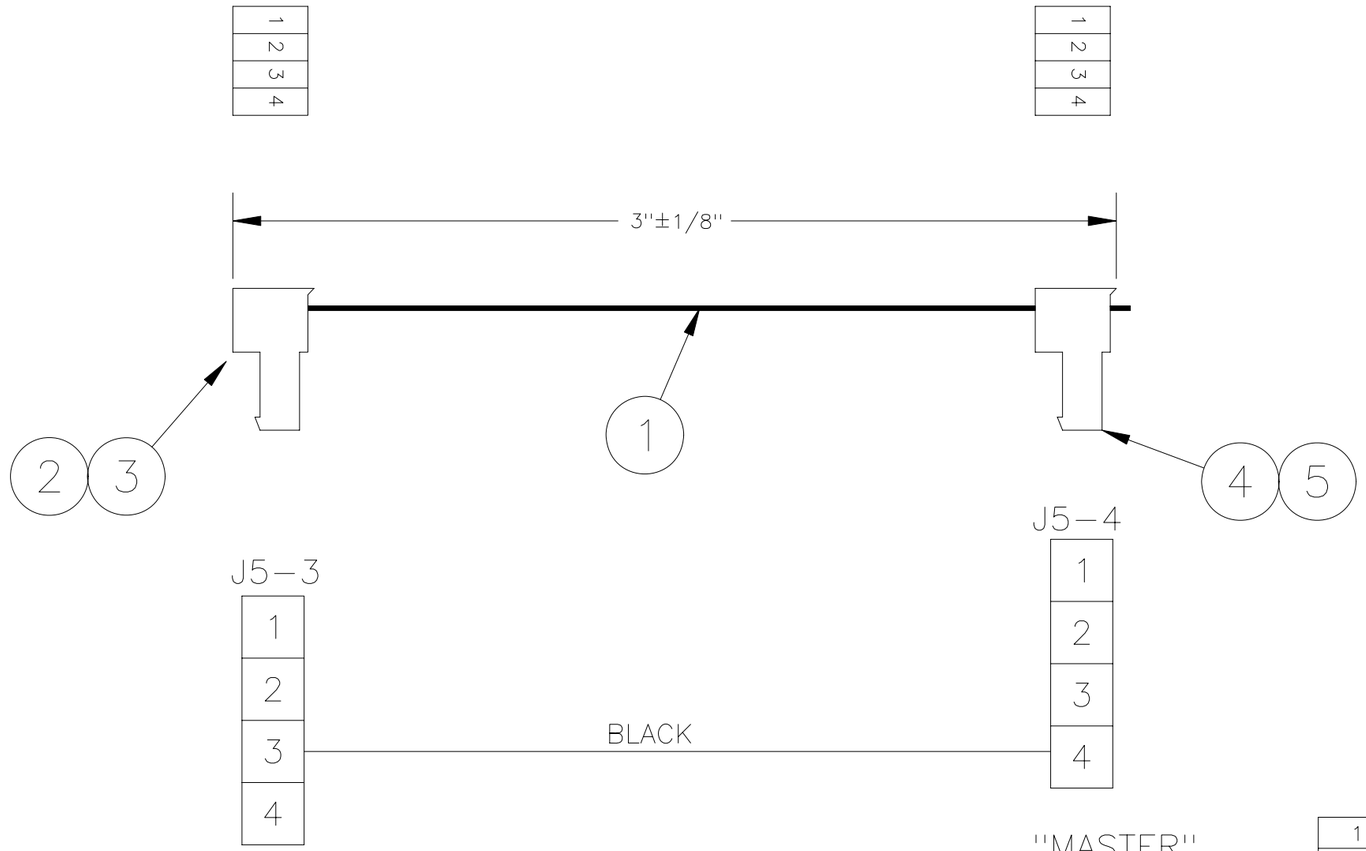


NOTES:
1. LABEL THE HARNESS WITH THE HURCO PART NUMBER AND REVISION.
2. LABEL THE CONNECTORS PER THE SCHEMATIC REFERENCES.

| QTY. | PART NUMBER | ITEM DESCRIPTION | ITEM |
|---|---|---|---|
| 1 | 406-0903-015 | STRAIN RELIEF, 4-POS MTA FEED THRU 0.100" | 5 |
| 1 | 406-0903-014 | CONNECTOR, 4-POS MTA FEED THRU 0.100" | 4 |
| 1 | 406-0903-016 | STRAIN RELIEF, 4-POS MTA 0.100" | 3 |
| 1 | 406-0903-017 | CONNECTOR, 4-POS MTA 0.100" | 2 |
| 3" | 406-1687-010 | WIRE, 24 AWG 300V BLACK | 1 |

PARTS LIST

| REV | E.C.N. NO. | REVISION DESCRIPTION | REV BY | DATE | CHK BY | DATE | APPD BY | DATE | DF |
|---|---|---|---|---|---|---|---|---|---|
| B | 13395 | LABELED CONNECTOR ENDS | CWK | 4/13 1995 | FWG | 4/13 1995 | | | |
| A | 12942 | ORIGINAL RELEASE | | | | | | | |

CN 8120

SURFACE TREATMENT

HEAT TREATMENT

FIRST USED ON: MAX3 ISA

EXCEPT AS NOTED: ALL DIMENSIONS IN INCHES
TOLERANCE DECIMAL
.0 ?.0300
.00 ?.0150
.000 ?.0050
.0000 ?.0005
ANGULAR ?.0?30'
BREAK ALL SHARP EDGES

THIRD ANGLE PROJECTION

HURCO MANUFACTURING COMPANY, INC.
INDIANAPOLIS, IN U.S.A.

DESCRIPTION: HARNESS, ISA/DSP SYNC

| DRAWN | DATE | CHECKED | DATE | APPROVED | DATE |
|---|---|---|---|---|---|
| D.A.B. | 30DEC93 | TMW | 14FEB94 | TMW | 14FEB94 |

| SCALE | SIZE | DRAWING | SHT. | REV. |
|---|---|---|---|---|
| NONE | B | 423-4400-011 | 1 OF 1 | |

UNIT OF MEAS. PC

# Harness, Rotary Encoder, 90 Degree, Sigma II, VM1, 423-4401-922—Rev. B

| SIZE | DRAWING | SHT. | REV. |
|---|---|---|---|
| C | 423-4401-922 | 1 OF 1 | B |

PROPRIETARY INFORMATION
INFORMATION CONTAINED HEREIN IS THE PROPERTY OF HURCO MANUFACTURING COMPANY, INC. NO REPRODUCTION OR DISCLOSURE OF THIS INFORMATION SHALL BE MADE BY THE RECIPIENT TO ANY OTHER PERSON OR ORGANIZATION WITHOUT THE PRIOR WRITTEN CONSENT OF HURCO MANUFACTURING COMPANY, INC.

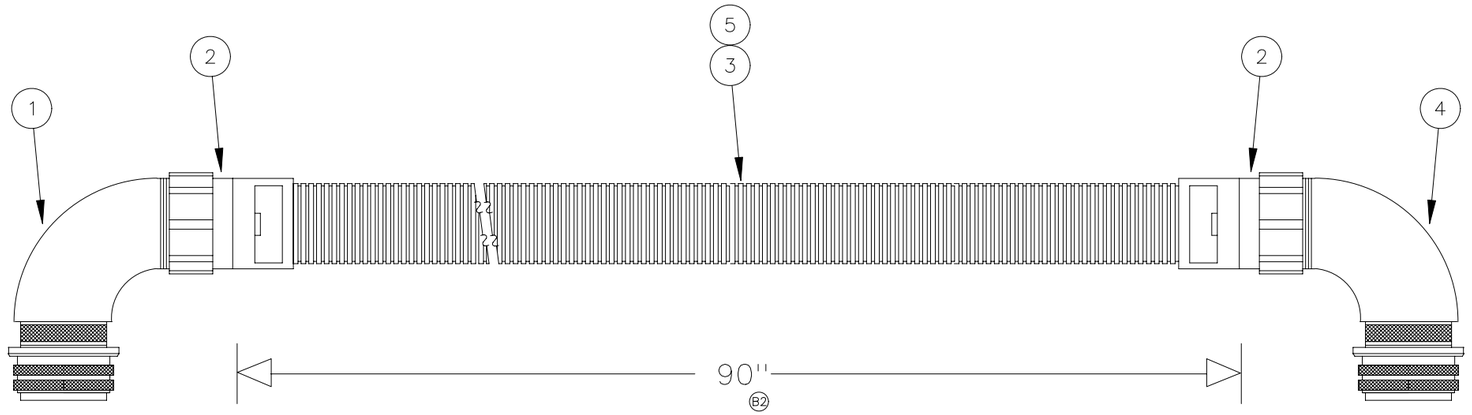


SCHEMATIC
(ENCODER)

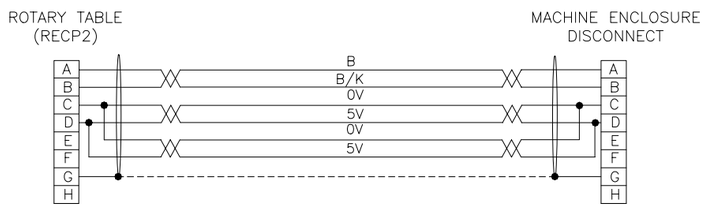


| | QTY. | U.O.M. | PART NUMBER | ITEM DESCRIPTION | ITEM |
|---|---|---|---|---|---|
| | | | | PARTS LIST | |
| B1 | 95" | | 406-1081-007 | CABLE, 22GA, 7TW/PR, SHLD | 5 |
| | 1 | | 408-1124-021 | 90 DEGREE PLUG, MS3108B20-29P | 4 |
| B2 | 90" | | 408-0171-036 | CONDUIT, EX-FLEX CLL-12B | 3 |
| | 2 | | 408-0171-032 | FEMALE THREAD ADAPTERS, 3/4" 1-3/16-18 | 2 |
| | 1 | | 406-0321-050 | 90 DEGREE PLUG, MS3108E20-7S | 1 |

NOTES:

1. APPLY ITEM 3 AND 4, RTV-732 SEALANT MATERIAL TO POT THE MS CONNECTOR.
2. DIMENSIONS REFER TO STRAIGHT-LINE LENGTH, TOLERANCE +/-1/2".
3. FINISHED ASSEMBLY TO BE MARKED WITH THE HURCO PART NUMBER AND REVISION LETTER.

| REV | ECN NO. | REVISION DESCRIPTION | REV BY | DATE | CHK BY | DATE | APPD BY | DATE | DF |
|---|---|---|---|---|---|---|---|---|---|
| B | 15717 | 1) WAS 77", 2) WAS 72" | SJT | 28 JUL 04 | DEO | 29 JUL 04 | DEO | 29 JUL 04 | |
| A | 15636 | ORIGINAL RELEASE | | | | | | | |

SURFACE TREATMENT

HEAT TREATMENT

FIRST USED ON
VM1

EXCEPT AS NOTED:
ALL DIMENSIONS IN INCHES
TOLERANCE
DECIMAL
.0 ±.0300
.00 ±.0150
.000 ±.0050
.0000 ±.0005
ANGULAR ± 0°30'
BREAK ALL SHARP EDGES

THIRD ANGLE PROJECTION

HURCO MANUFACTURING COMPANY, INC.
INDIANAPOLIS, IN U.S.A.

DESCRIPTION
HARNESS, ROTARY ENCODER, 90 DEGREE, SIGMA II, VM1

| DRAWN | DATE | CHECKED | DATE | APPROVED | DATE |
|---|---|---|---|---|---|
| SJT | 10-13-03 | ROD | 10-14-03 | DEO | 10-15-03 |

| SCALE | SIZE | DRAWING | SHT. | REV. |
|---|---|---|---|---|
| NONE | C | 423-4401-922 | 1 OF 1 | B |

UNIT OF MEAS
NONE

# Harness, Rotary Motor, 90 Degree, Sigma II, VM1, 423-4401-923—Rev. B

| SIZE | DRAWING | SHT. | REV. |
|---|---|---|---|
| C | 423-4401-923 | 1 OF 1 | B |

PROPRIETARY INFORMATION
INFORMATION CONTAINED HEREIN IS THE PROPERTY OF HURCO MANUFACTURING COMPANY, INC. NO REPRODUCTION OR DISCLOSURE OF THIS INFORMATION SHALL BE MADE BY THE RECIPIENT TO ANY OTHER PERSON OR ORGANIZATION WITHOUT THE PRIOR WRITTEN CONSENT OF HURCO MANUFACTURING COMPANY, INC.

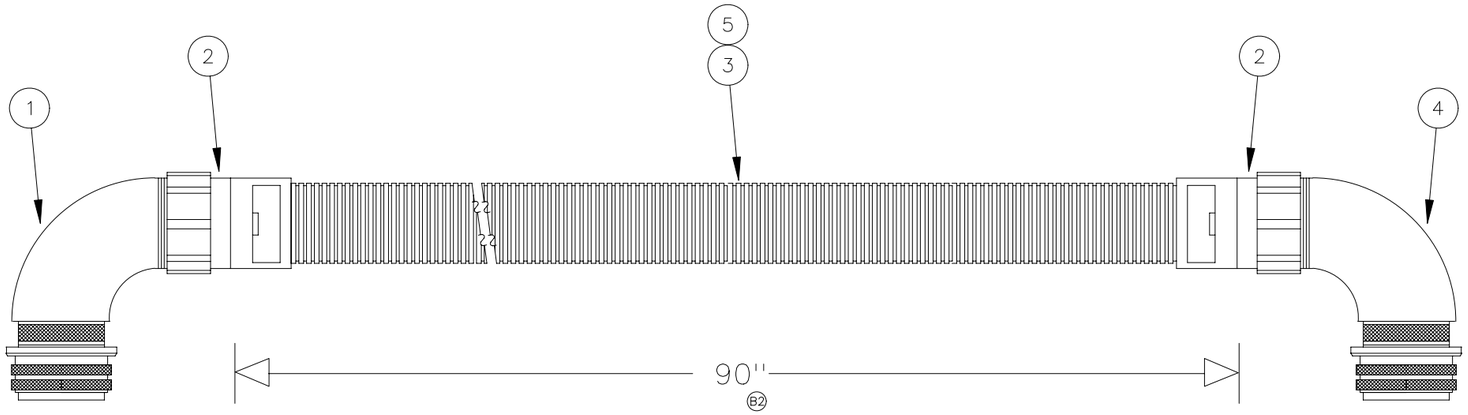


SCHEMATIC
(MOTOR)

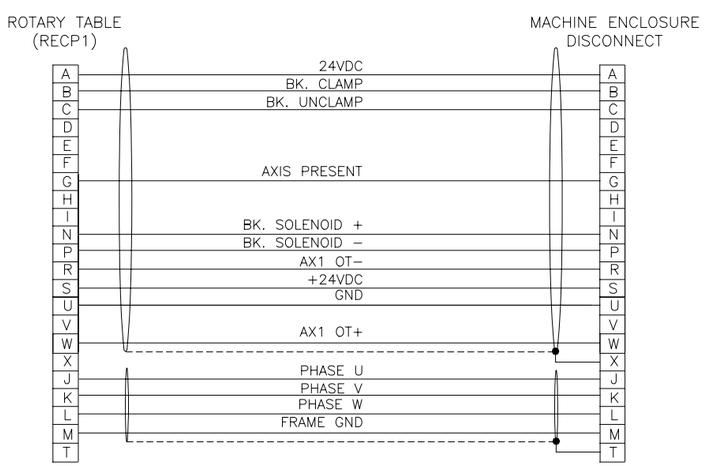


NOTES:

1. APPLY ITEM 3 AND 4, RTV–732 SEALANT MATERIAL TO POT THE MS CONNECTOR.
2. DIMENSIONS REFER TO STRAIGHT–LINE LENGTH, TOLERANCE +/–1/2".
3. FINISHED ASSEMBLY TO BE MARKED WITH THE HURCO PART NUMBER AND REVISION LETTER.

| | QTY. | U.O.M. | PART NUMBER | ITEM DESCRIPTION | ITEM |
|---|---|---|---|---|---|
| | | | | PARTS LIST | |
| B1 | 95" | | 406–1245–002 | CABLE, 22GA, 10–COND, SHLD | 6 |
| B1 | 95" | | 780–0001–017 | CABLE, 4–COND, 5.5SQ MM W/BRAIDED SHIELD | 5 |
| | 1 | | 408–1124–022 | 90 DEGREE PLUG, MS3108B28–11P | 4 |
| B2 | 90" | | 408–0171–036 | CONDUIT, EX–FLEX CLL–12B | 3 |
| | 2 | | 408–0171–033 | FEMALE THREAD ADAPTERS, 3/4" 1–7/16–18 | 2 |
| | 1 | | 408–1124–014 | 90 DEGREE PLUG, MS3108E28–11S | 1 |

| REV | ECN NO. | REVISION DESCRIPTION | REV BY | DATE | CHK BY | DATE | APP'D BY | DATE | DF |
|---|---|---|---|---|---|---|---|---|---|
| B | 15717 | 1) WAS 77", 2) WAS 72" | SJT | 29 JUL 04 | DEO | 29 JUL 04 | DEO | 29 JUL 04 | |
| A | 15636 | ORIGINAL RELEASE | | | | | | | |

SURFACE TREATMENT

HEAT TREATMENT

FIRST USED ON
VM1

EXCEPT AS NOTED:
ALL DIMENSIONS IN INCHES
TOLERANCE
DECIMAL
.0 ±.0300
.00 ±.0150
.000 ±.0050
.0000 ±.0005
ANGULAR ± 0°30'
BREAK ALL SHARP EDGES

THIRD ANGLE PROJECTION

HURCO MANUFACTURING COMPANY, INC.
INDIANAPOLIS, IN U.S.A.

DESCRIPTION
HARNESS, ROTARY MOTOR, 90 DEGREE, SIGMA II, VM1

| DRAWN | DATE | CHECKED | DATE | APPROVED | DATE |
|---|---|---|---|---|---|
| SJT | 10–13–03 | ROD | 10–14–03 | DEO | 10–15–03 |

| SCALE | SIZE | DRAWING | SHT. | REV. |
|---|---|---|---|---|
| NONE | C | 423–4401–923 | 1 OF 1 | B |

UNIT OF MEAS
NONE

| SIZE | DRAWING | SHT. | REV. |
|---|---|---|---|
| C | 423-4401-933 | 1 OF 1 | C |

PROPRIETARY INFORMATION

INFORMATION CONTAINED HEREIN IS THE PROPERTY OF HURCO MANUFACTURING COMPANY, INC. NO REPRODUCTION OR DISCLOSURE OF THIS INFORMATION SHALL BE MADE BY THE RECIPIENT TO ANY OTHER PERSON OR ORGANIZATION WITHOUT THE PRIOR WRITTEN CONSENT OF HURCO MANUFACTURING COMPANY, INC.

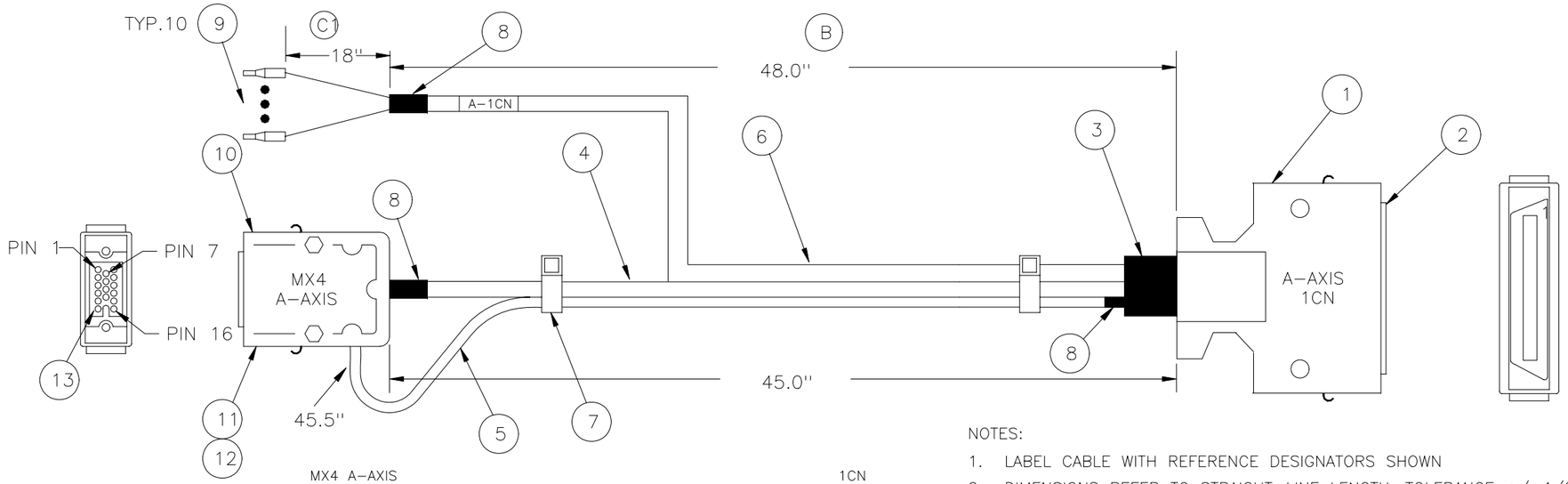


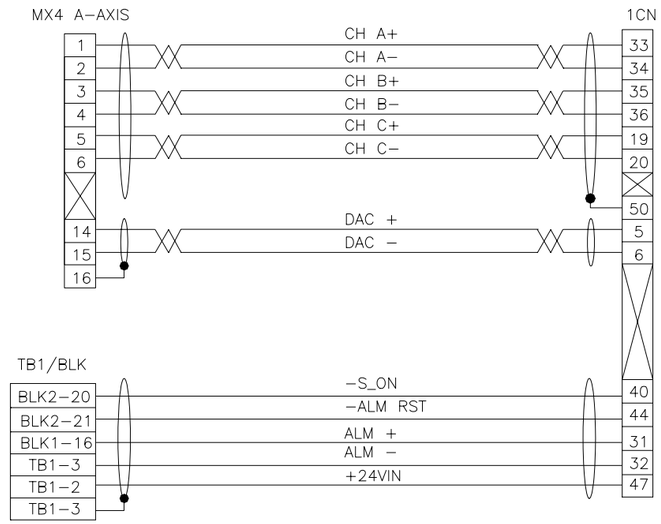


NOTES:

1. LABEL CABLE WITH REFERENCE DESIGNATORS SHOWN
2. DIMENSIONS REFER TO STRAIGHT-LINE LENGTH, TOLERANCE +/-1/2''.
3. FINISHED ASSEMBLY TO BE MARKED WITH THE HURCO PART NUMBER AND REVISION LETTER.
4. USE 1/2'' OF 3/32'' HEAT SHRINK TUBING ON EACH TERMINAL OF 1CN CONNECTOR
5. LABEL TB-R END CONDUCTORS WITH NUMBERED I.D. BANDS (SHIELDS EXCEPTED).

PARTS LIST

| QTY. | PART NUMBER | ITEM DESCRIPTION | ITEM |
|---|---|---|---|
| 7'' | 406-6481-015 | HEAT SHRINK, 3/32'' BLACK | 13 |
| 16 | 406-0811-008 | CONTACT, MALE SILVER | 12 |
| 1 | 406-0811-019 | INSULATOR, 16-POS MALE | 11 |
| 1 | 406-0811-002 | CASE, VERT/HORZ 16-POS | 10 |
| 6 | 406-0965-014 | FERRULE, 24AWG LIGHT YELLOW | 9 |
| 4'' | 406-6481-004 | HEATSHRINK, 1/4'' BLACK | 8 |
| 2 | 406-5001-003 | TIE WRAP SMALL | 7 |
| C2 B 66'' | 406-1244-009 | CABLE, 24GA, 6-COND, SHLD | 6 |
| 45.5'' | 406-1247-094 | CABLE, 24GA, 1 TW/PR, SHLD | 5 |
| 45'' | 406-1328-006 | CABLE, 24GA, 4 TW/PR, SHLD | 4 |
| 2'' | 406-6481-006 | HEATSHRINK, 1/2'' BLACK | 3 |
| 1 | 406-0802-079 | CONNECTOR, 10150-3000VE (3M) | 2 |
| 1 | 406-0802-080 | CASE, 10350-52A0-008 (3M) | 1 |

| REV | P.I.N. NO. | REVISION DESCRIPTION | REV BY | DATE | CHK BY | DATE | APPD BY | DATE | DF |
|---|---|---|---|---|---|---|---|---|---|
| C | 157981) WAS 12''; 2) WAS 60'' | | SJT | 11 9 04 | | | | | |
| B | 15712WAS 30'' | | SJT | 11 9 04 | | | | | |
| A | 15497RELEASE | | | | | | | | |

SURFACE TREATMENT

HEAT TREATMENT

FIRST USED ON VM1

EXCEPT AS NOTED: ALL DIMENSIONS IN INCHES TOLERANCE DECIMAL .0 ±.0300, .00 ±.0150, .000 ±.0050, .0000 ±.0005, ANGULAR ± 0°30'

THIRD ANGLE PROJECTION

HURCO MANUFACTURING COMPANY, INC. INDIANAPOLIS, IN U.S.A.

DESCRIPTION: HARNESS, A-AXIS, 1CN TO MX4/TB1

| DRAWN | DATE | CHECKED | DATE | APPROVED | DATE |
|---|---|---|---|---|---|
| ROD | 4-25-02 | SJT | 5-28-02 | DEO | 5-28-02 |

| SCALE | SIZE | DRAWING | SHT. | REV. |
|---|---|---|---|---|
| NONE | C | 423-4401-933 | 1 OF 1 | C |

UNIT OF MEAS: EA

# Harness, IOIF J3, Sigma II, 423-4401-934—Rev. B

| SIZE | DRAWING | SHT. | REV. | PROPRIETARY INFORMATION |
|---|---|---|---|---|
| C | 423-4401-934 | 1 OF 1 | B | INFORMATION CONTAINED HEREIN IS THE PROPERTY OF HURCO MANUFACTURING COMPANY, INC. NO REPRODUCTION OR DISCLOSURE OF THIS INFORMATION SHALL BE MADE BY THE RECIPIENT TO ANY OTHER PERSON OR ORGANIZATION WITHOUT THE PRIOR WRITTEN CONSENT OF HURCO MANUFACTURING COMPANY, INC. |

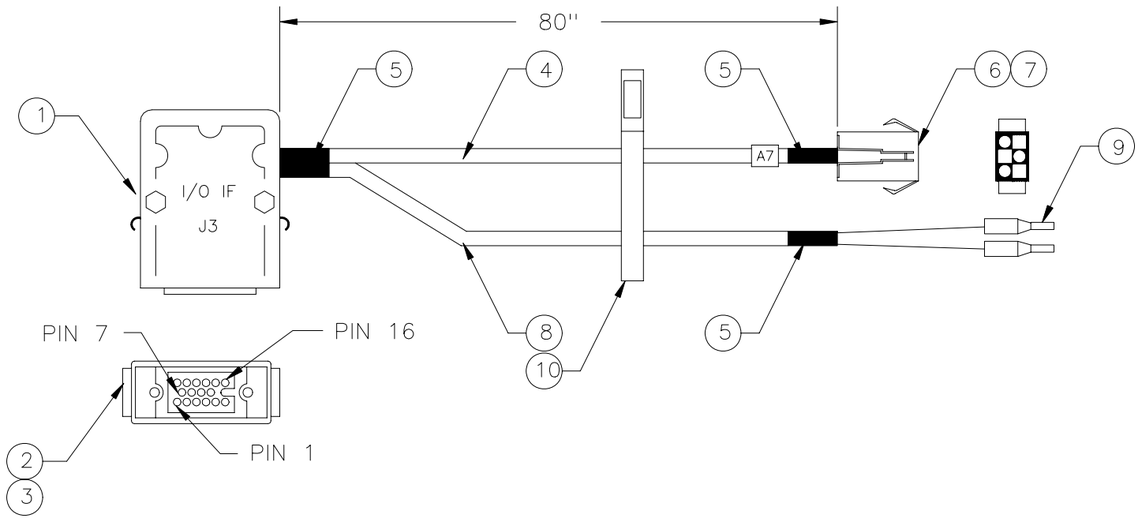


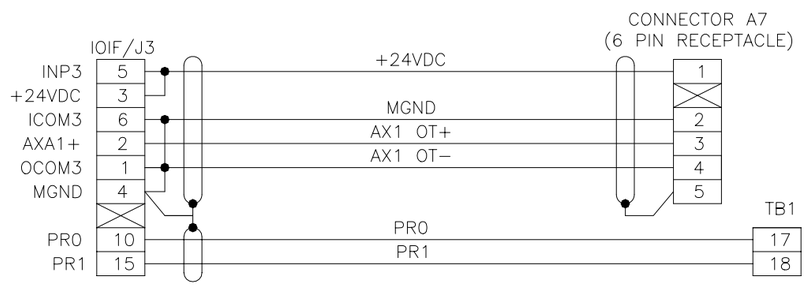


NOTES:
1. MARK HARNESS WITH HURCO PART NUMBER AND REVISION.
2. OVERALL DIMENSION IS STRAIGHT LINE LENGTH, +1''.
3. LABEL CONNECTOR AS SHOWN.
4. STRIP LENGTH IS 10''.

| ITEM | PART NUMBER | ITEM DESCRIPTION | QTY. |
|---|---|---|---|
| B3 | 406-5001-003 | TIE WRAP, SMALL | 10 |
| B2 | 406-0965-014 | FERRULE, 24AWG LIGHT YELLOW | 9 |
| B1 | 406-1245-007 | CABLE, 24AWG, 2-COND, SHLD | 8 |
| 5 | 406-7501-050 | CONNECTOR PINS, 18MM, MALE | 7 |
| 1 | 406-0804-062 | SOCKET, RECEPTACLE 6 POS JST | 6 |
| B4 | 406-6481-005 | SHRINK TUBE, 3/8'' BLACK | 5 |
| 80'' | 406-1244-009 | CABLE, 6/COND, 24AWG SHLD | 4 |
| B5 | 406-0811-010 | CONTACT, FEMALE SILVER | 3 |
| 1 | 406-0811-013 | INSULATOR, 16-POS FEMALE | 2 |
| 1 | 406-0811-002 | CASE, VERTICAL/HORIZONTAL 16POS | 1 |

PARTS LIST

| REV | P.I.N. NO. | REVISION DESCRIPTION | REV BY | DATE | CHK BY | DATE | APPD BY | DATE | DF |
|---|---|---|---|---|---|---|---|---|---|
| B | 15728 | 3) ADDED 406-5001-003; 4) WAS 4''; 5) WAS QTY:13<br>1) ADDED 406-1245-007, 2) ADDED 406-0965-014 | SJT | 2 JUN 04 | DEO | 3 JUN 04 | DEO | 3 JUN 04 | |
| A | 15636 | RELEASE | | | | | | | |

SURFACE TREATMENT

HEAT TREATMENT

FIRST USED ON
VM1

EXCEPT AS NOTED:
ALL CORNERS MUST BE AS FOLLOWS
INSIDE:
.050'' X 45° OR .05'' R MAX
OUTSIDE:
.030'' X 45° OR .05'' R

EXCEPT AS NOTED:
WELDING TOLERANCE MUST BE AS FOLLOWS
±.12

EXCEPT AS NOTED:
ALL DIMENSIONS IN INCHES
TOLERANCE
DECIMAL
.0 ±.0300
.00 ±.0150
.000 ±.0050
.0000 ±.0005
ANGULAR ± 0°30'

THIRD ANGLE PROJECTION

HURCO MANUFACTURING COMPANY, INC.
INDIANAPOLIS, IN U.S.A.

DESCRIPTION
HARNESS, IOIF J3, SIGMA II

| DRAWN | DATE | CHECKED | DATE | APPROVED | DATE |
|---|---|---|---|---|---|
| ROD | 12-26 | | | | |

| SCALE | SIZE | DRAWING | SHT. | REV. |
|---|---|---|---|---|
| NONE | C | 423-4401-934 | 1 OF 1 | B |

UNIT OF MEAS
EA

| SIZE | DRAWING | SHT. | REV. | PROPRIETARY INFORMATION |
|---|---|---|---|---|
| D | 003-0102-009 | 1 OF 1 | A | INFORMATION CONTAINED HEREIN IS THE PROPERTY OF HURCO COMPANIES, INC. NO REPRODUCTION OR DISCLOSURE OF THIS INFORMATION SHALL BE MADE BY THE RECIPIENT TO ANY OTHER PERSON OR ORGANIZATION WITHOUT THE PRIOR WRITTEN CONSENT OF HURCO COMPANIES, INC. |

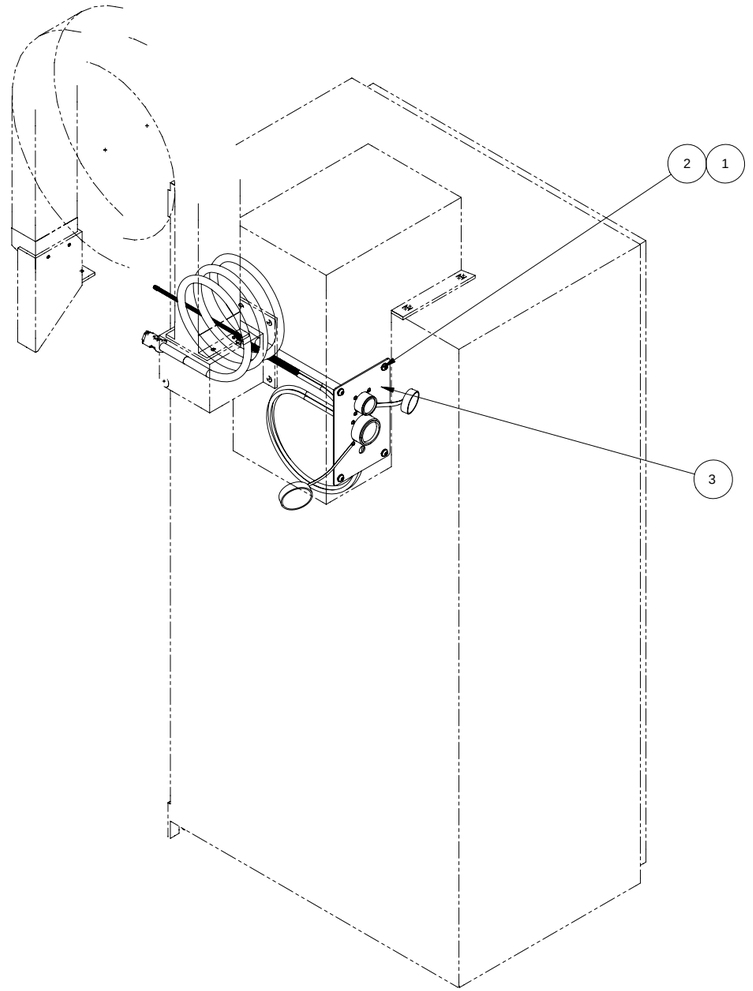


| ITEM | QTY. | PART NO. | DESCRIPTION |
|---|---|---|---|
| 3 | 1 | 002-4321-046 | ASS'Y, ROTARY TABLE HARNESSES |
| 2 | 4 | 108-5004-001 | BHSCS, M 6 X 1.0 P X 10 LG |
| 1 | 4 | 110-0046-007 | LOCKWASHER, M6, HELICAL SPRING |

| REV | E.C.N. NO. | REVISION DESCRIPTION | REV BY | DATE | CHK BY | DATE | APPD BY | DATE |
|---|---|---|---|---|---|---|---|---|
| A | 15636 | Original Release | | | | | | |

SURFACE TREATMENT: NONE

HEAT TREATMENT: NONE

FIRST USED ON: VM1

EXCEPT AS NOTED: ALL CORNERS MUST BE AS FOLLOWS INSIDE: 1.3 X 45° OR 1.3 R MAX OUTSIDE: 0.8 X 45° OR 1.3 R

EXCEPT AS NOTED: ALL DIMENSIONS IN METRIC TOLERANCE DECIMAL: .0 ±0.8, .00 ±0.4, .000 ±0.13, .0000 ±0.013, ANGULAR ±5°30'

EXCEPT AS NOTED: WELDING TOLERANCE MUST BE AS FOLLOWS ±?

HURCO COMPANIES, INC.
INDIANAPOLIS, IN U.S.A.

DESCRIPTION: ASS'Y, 4th AXIS INTERFACE, (EUR)

| DRAWN | DATE | CHECKED | DATE | APPROVED | DATE |
|---|---|---|---|---|---|
| ROD | 1-30-04 | Rod | 1/30/04 | DEO | 3/9/04 |

| SCALE | SIZE | DRAWING | SHT. | REV. |
|---|---|---|---|---|
| 1:5 | D | 003-0102-009 | 1 OF 1 | A |

UNIT OF MEAS.: PC

| SIZE | DRAWING | SHT. | REV. |
|---|---|---|---|
| D | 003–2022–019 | 1 OF 8 | C |

PROPRIETARY INFORMATION
INFORMATION CONTAINED HEREIN IS THE PROPERTY OF HURCO MANUFACTURING COMPANY, INC. NO REPRODUCTION OR DISCLOSURE OF THIS INFORMATION SHALL BE MADE BY THE RECIPIENT TO ANY OTHER PERSON OR ORGANIZATION WITHOUT THE PRIOR WRITTEN CONSENT OF HURCO MANUFACTURING COMPANY, INC.

# INDEX

ELECTRICAL DIAGRAMS FOR ROTARY TABLES WITH YASKAWA SIGMA II DRIVES


| PAGE | DESCRIPTION |
|---|---|
| 1 | INDEX, ELECTRICAL DIAGRAMS |
| 2 | SCHEMATIC, A–AXIS CLAMP/UNCLAMP/PROXIMITY SWITCH SUBSYSTEMS (VMX SERIES) |
| 3 | SCHEMATIC, A–AXIS DRIVE POWER AND SIGNAL (VMX SERIES) |
| 4 | SCHEMATIC, A–AXIS CLAMP/UNCLAMP/PROXIMITY SWITCH SUBSYSTEMS (VM SERIES) |
| 5 | SCHEMATIC, A–AXIS DRIVE POWER AND SIGNAL (VM SERIES) |
| 6 | SCHEMATIC, B–AXIS CLAMP/UNCLAMP/PROXIMITY SWITCH SUBSYSTEMS (VMX SERIES) |
| 7 | SCHEMATIC, B–AXIS DRIVE POWER AND SIGNAL (VMX SERIES) |
| 8 | (C3) |


| REV | ECN NO. | REVISION DESCRIPTION | REV BY | DATE | CHK BY | DATE | APPD BY | DATE | DF |
|---|---|---|---|---|---|---|---|---|---|
| C | 15830 | 4) ADDED MGND JUMPER TO DCIO J1–35, P.6<br>2) ADDED NOTE FOR JUMPER, P.3,5,7; 3) DELETED UNUSED TERMINAL BLOCK,P.1,8<br>1) RE–LABELED POWER TERMINAL BLOCK. WAS R,S,T,r,t, P.3,5,7 | SJT | 9 MAR 05 | DEO | 10 MAR 05 | DEO | 10 MAR 05 | |
| B | 15728 | ADDED CONNECTIONS FOR PROBE OPTION, P.3,5,7 | SJT | 2 JUN 04 | DEO | 3 JUN 04 | DEO | 3 JUN 04 | |
| A | 15636 | RELEASE | | | | | | | |

SURFACE TREATMENT ~

HEAT TREATMENT ~

FIRST USED ON VMX

EXCEPT AS NOTED: ALL CORNERS MUST BE AS FOLLOWS
INSIDE: .050" X 45° OR .05" R MAX
OUTSIDE: .030" X 45° OR .05" R

EXCEPT AS NOTED: WELDING TOLERANCE MUST BE AS FOLLOWS ±.12

EXCEPT AS NOTED: ALL DIMENSIONS IN INCHES TOLERANCE
DECIMAL .0 ±.0300, .00 ±.0150, .000 ±.0050, .0000 ±.0005
ANGULAR ± 0°30'

THIRD ANGLE PROJECTION

HURCO MANUFACTURING COMPANY, INC.
INDIANAPOLIS, IN U.S.A.

| DESCRIPTION | | | | | |
|---|---|---|---|---|---|
| SCHEMATICS, ELECTRICAL, ROTARY TABLE | | | | | |
| DRAWN | DATE | CHECKED | DATE | APPROVED | DATE |
| SJT | 11JUL03 | DEO | 11JUL03 | | |
| SCALE | SIZE | DRAWING | | SHT. | REV. |
| NONE | D | 003–2022–019 | | 1 OF 8 | C |
| UNIT OF MEAS. EA | | | | | |

| SIZE | DRAWING | SHT. | REV. |
|---|---|---|---|
| D | 003-2022-019 | 2 OF 8 | C |

PROPRIETARY INFORMATION
INFORMATION CONTAINED HEREIN IS THE PROPERTY OF HURCO MANUFACTURING COMPANY, INC. NO REPRODUCTION OR DISCLOSURE OF THIS INFORMATION SHALL BE MADE BY THE RECIPIENT TO ANY OTHER PERSON OR ORGANIZATION WITHOUT THE PRIOR WRITTEN CONSENT OF HURCO MANUFACTURING COMPANY, INC.

# CLAMP/UNCLAMP/PROX. SWITCH SUBSYSTEMS (VMX)

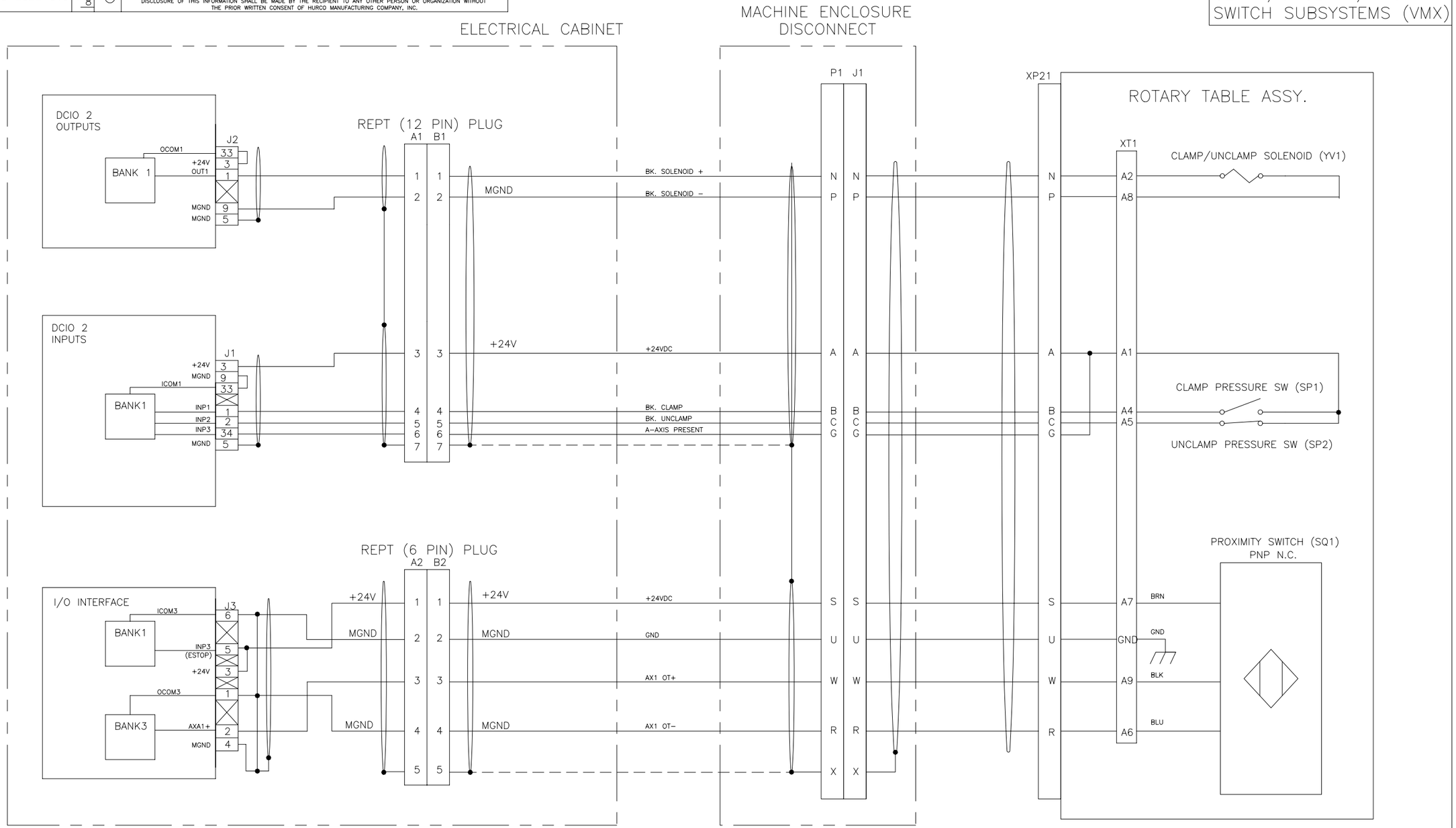


| | | | | |
|---|---|---|---|---|
| SURFACE TREATMENT | EXCEPT AS NOTED: ALL CORNERS MUST BE AS FOLLOWS INSIDE: .050" X 45° OR .05" R MAX OUTSIDE: .030" X 45° OR .05" R | EXCEPT AS NOTED: ALL DIMENSIONS IN INCHES TOLERANCE DECIMAL .0 ±.0300, .00 ±.0150, .000 ±.0050, .0000 ±.0005, ANGULAR ± 0°30' | HURCO MANUFACTURING COMPANY, INC. INDIANAPOLIS, IN U.S.A. | |
| HEAT TREATMENT | | | DESCRIPTION: SCHEMATICS, ELECTRICAL, ROTARY TABLE | |
| FIRST USED ON: VMX | EXCEPT AS NOTED: WELDING TOLERANCE MUST BE AS FOLLOWS ±.12 | THIRD ANGLE PROJECTION | DRAWN: SJT — DATE: 11JUL03 — CHECKED: DEO — DATE: 11JUL03 — APPROVED: DEO — DATE: 11JUL03 | |
| | | | SCALE: NONE — UNIT OF MEAS: EA — SIZE: D — DRAWING: 003-2022-019 — SHT. 2 OF 8 — REV. C | |

| SIZE | DRAWING | SHT. | REV. |
|---|---|---|---|
| D | 003-2022-019 | 3 OF 8 | C |

PROPRIETARY INFORMATION

INFORMATION CONTAINED HEREIN IS THE PROPERTY OF HURCO MANUFACTURING COMPANY, INC. NO REPRODUCTION OR DISCLOSURE OF THIS INFORMATION SHALL BE MADE BY THE RECIPIENT TO ANY OTHER PERSON OR ORGANIZATION WITHOUT THE PRIOR WRITTEN CONSENT OF HURCO MANUFACTURING COMPANY, INC.

# A—AXIS DRIVE POWER & SIGNAL (VMX)

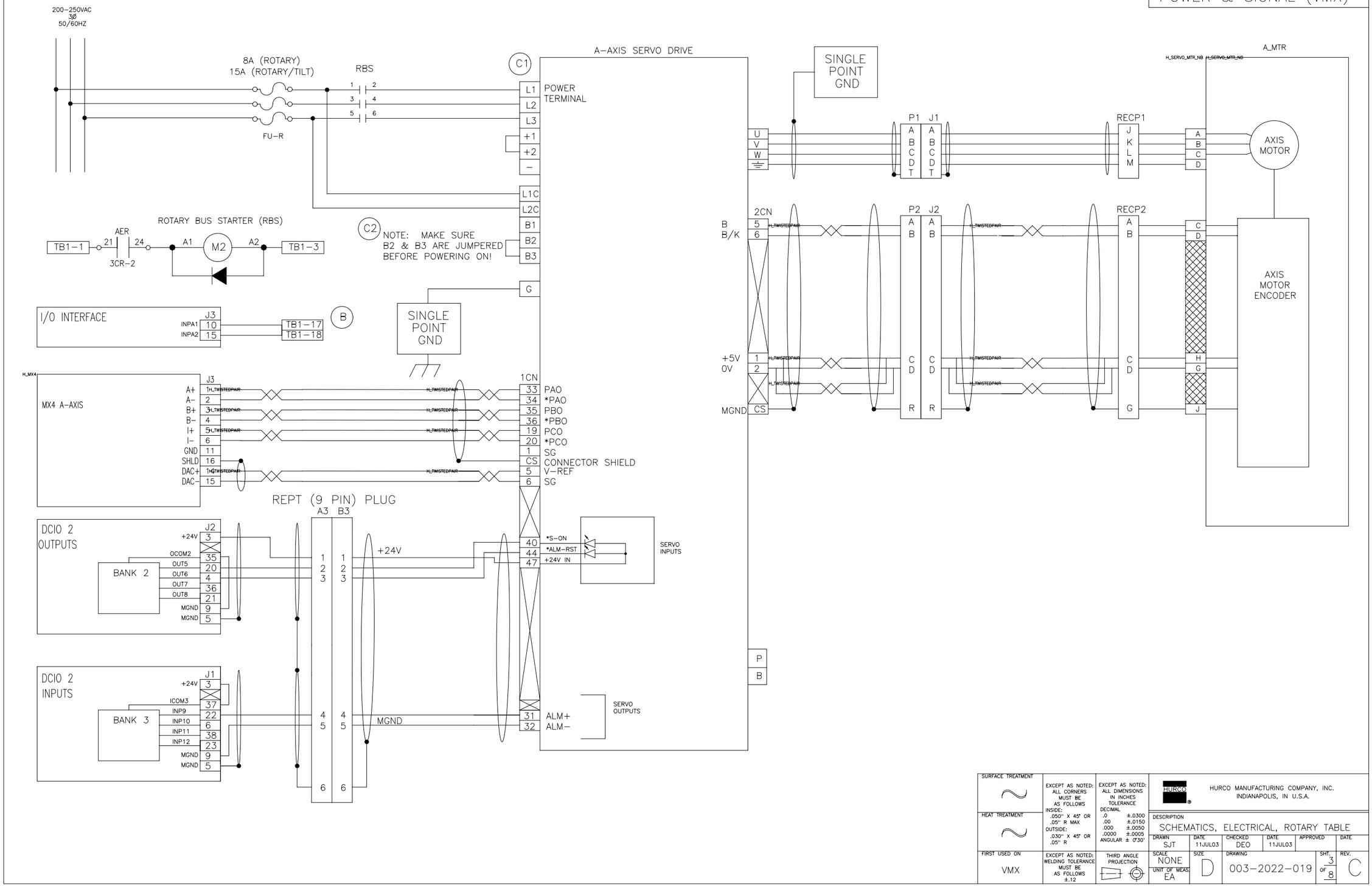


| | | | | | | |
|---|---|---|---|---|---|---|
| SURFACE TREATMENT | EXCEPT AS NOTED: ALL CORNERS MUST BE AS FOLLOWS INSIDE: .050" X 45° OR .05" R MAX OUTSIDE: .030" X 45° OR .05" R | EXCEPT AS NOTED: ALL DIMENSIONS IN INCHES TOLERANCE DECIMAL .0 ±.0300 .00 ±.0150 .000 ±.0050 .0000 ±.0005 ANGULAR ± 0°30' | HURCO MANUFACTURING COMPANY, INC. INDIANAPOLIS, IN U.S.A. | | | |
| HEAT TREATMENT | | | DESCRIPTION: SCHEMATICS, ELECTRICAL, ROTARY TABLE | | | |
| | | | DRAWN: SJT | DATE: 11JUL03 | CHECKED: DEO | DATE: 11JUL03 / APPROVED / DATE |
| FIRST USED ON: VMX | EXCEPT AS NOTED: WELDING TOLERANCE MUST BE AS FOLLOWS ±.12 | THIRD ANGLE PROJECTION | SCALE: NONE / UNIT OF MEAS: EA | SIZE: D | DRAWING: 003—2022—019 | SHT. 3 OF 8 / REV. C |

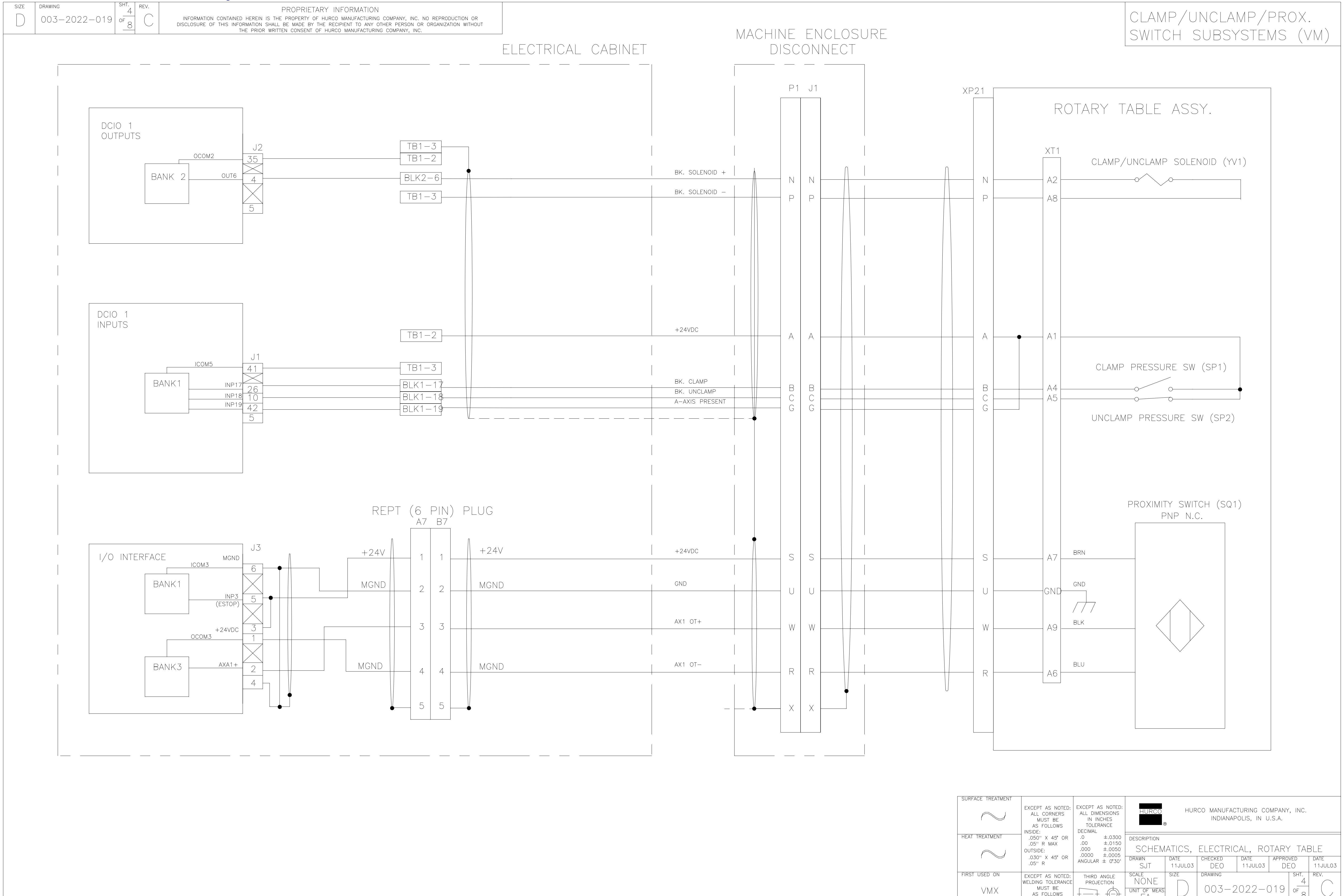
SIZE D
DRAWING 003-2022-019
SHT. 4 OF 8
REV. C
PROPRIETARY INFORMATION
INFORMATION CONTAINED HEREIN IS THE PROPERTY OF HURCO MANUFACTURING COMPANY, INC. NO REPRODUCTION OR DISCLOSURE OF THIS INFORMATION SHALL BE MADE BY THE RECIPIENT TO ANY OTHER PERSON OR ORGANIZATION WITHOUT THE PRIOR WRITTEN CONSENT OF HURCO MANUFACTURING COMPANY, INC.
CLAMP/UNCLAMP/PROX. SWITCH SUBSYSTEMS (VM)
ELECTRICAL CABINET
MACHINE ENCLOSURE DISCONNECT
DCIO 1 OUTPUTS
BANK 2
OCOM2
OUT6
J2
35
4
5
TB1-3
TB1-2
BLK2-6
TB1-3
BK. SOLENOID +
BK. SOLENOID -
P1 J1
N N
P P
XP21
ROTARY TABLE ASSY.
XT1
CLAMP/UNCLAMP SOLENOID (YV1)
A2
A8
DCIO 1 INPUTS
BANK1
ICOM5
INP17
INP18
INP19
J1
41
26
10
42
5
TB1-2
TB1-3
BLK1-17
BLK1-18
BLK1-19
+24VDC
BK. CLAMP
BK. UNCLAMP
A-AXIS PRESENT
A A
B B
C C
G G
A1
A4
A5
CLAMP PRESSURE SW (SP1)
UNCLAMP PRESSURE SW (SP2)
I/O INTERFACE
MGND
ICOM3
BANK1
INP3 (ESTOP)
+24VDC
OCOM3
BANK3
AXA1+
J3
6
5
3
1
2
4
REPT (6 PIN) PLUG
A7 B7
+24V
MGND
MGND
1 1
2 2
3 3
4 4
5 5
+24V
MGND
MGND
+24VDC
GND
AX1 OT+
AX1 OT-
S S
U U
W W
R R
X X
PROXIMITY SWITCH (SQ1)
PNP N.C.
A7
GND
A9
A6
BRN
GND
BLK
BLU
SURFACE TREATMENT
HEAT TREATMENT
FIRST USED ON
VMX
EXCEPT AS NOTED: ALL CORNERS MUST BE AS FOLLOWS
INSIDE: .050" X 45° OR .05" R MAX
OUTSIDE: .030" X 45° OR .05" R
EXCEPT AS NOTED: ALL DIMENSIONS IN INCHES TOLERANCE
DECIMAL
.0 ±.0300
.00 ±.0150
.000 ±.0050
.0000 ±.0005
ANGULAR ± 0°30'
EXCEPT AS NOTED: WELDING TOLERANCE MUST BE AS FOLLOWS ±.12
THIRD ANGLE PROJECTION
HURCO
HURCO MANUFACTURING COMPANY, INC.
INDIANAPOLIS, IN U.S.A.
DESCRIPTION
SCHEMATICS, ELECTRICAL, ROTARY TABLE
DRAWN SJT
DATE 11JUL03
CHECKED DEO
DATE 11JUL03
APPROVED DEO
DATE 11JUL03
SCALE NONE
UNIT OF MEAS EA
SIZE D
DRAWING 003-2022-019
SHT. 4 OF 8
REV. C

| SIZE | DRAWING | SHT. | REV. |
|---|---|---|---|
| D | 003-2022-019 | 5 OF 8 | C |

PROPRIETARY INFORMATION

INFORMATION CONTAINED HEREIN IS THE PROPERTY OF HURCO MANUFACTURING COMPANY, INC. NO REPRODUCTION OR DISCLOSURE OF THIS INFORMATION SHALL BE MADE BY THE RECIPIENT TO ANY OTHER PERSON OR ORGANIZATION WITHOUT THE PRIOR WRITTEN CONSENT OF HURCO MANUFACTURING COMPANY, INC.

# A—AXIS DRIVE POWER & SIGNAL (VM)

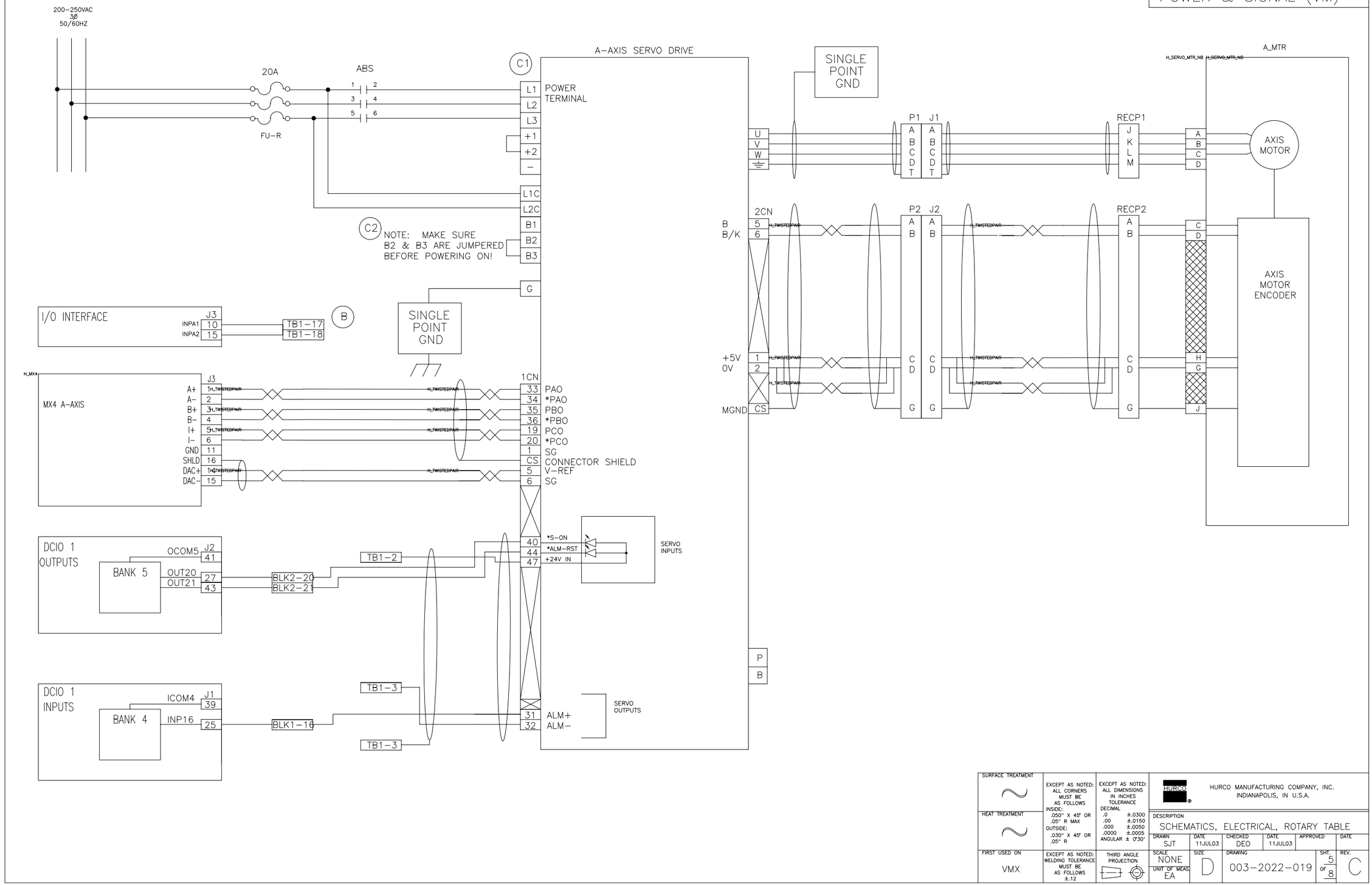


| | | | |
|---|---|---|---|
| SURFACE TREATMENT | EXCEPT AS NOTED: ALL CORNERS MUST BE AS FOLLOWS INSIDE: .050" X 45° OR .05" R MAX OUTSIDE: .030" X 45° OR .05" R | EXCEPT AS NOTED: ALL DIMENSIONS IN INCHES TOLERANCE DECIMAL .0 ±.0300 .00 ±.0150 .000 ±.0050 .0000 ±.0005 ANGULAR ± 0°30' | HURCO MANUFACTURING COMPANY, INC. INDIANAPOLIS, IN U.S.A. |
| HEAT TREATMENT | | | DESCRIPTION: SCHEMATICS, ELECTRICAL, ROTARY TABLE |
| FIRST USED ON: VMX | EXCEPT AS NOTED: WELDING TOLERANCE MUST BE AS FOLLOWS ±.12 | THIRD ANGLE PROJECTION | SCALE: NONE; UNIT OF MEAS: EA; SIZE: D; DRAWING: 003-2022-019; SHT. 5 OF 8; REV. C |

| DRAWN | DATE | CHECKED | DATE | APPROVED | DATE |
|---|---|---|---|---|---|
| SJT | 11JUL03 | DEO | 11JUL03 | | |

| SIZE | DRAWING | SHT. | REV. |
|---|---|---|---|
| D | 003-2022-019 | 6 of 8 | C |

PROPRIETARY INFORMATION
INFORMATION CONTAINED HEREIN IS THE PROPERTY OF HURCO MANUFACTURING COMPANY, INC. NO REPRODUCTION OR DISCLOSURE OF THIS INFORMATION SHALL BE MADE BY THE RECIPIENT TO ANY OTHER PERSON OR ORGANIZATION WITHOUT THE PRIOR WRITTEN CONSENT OF HURCO MANUFACTURING COMPANY, INC.

CLAMP/UNCLAMP/PROX. SWITCH SUBSYSTEMS

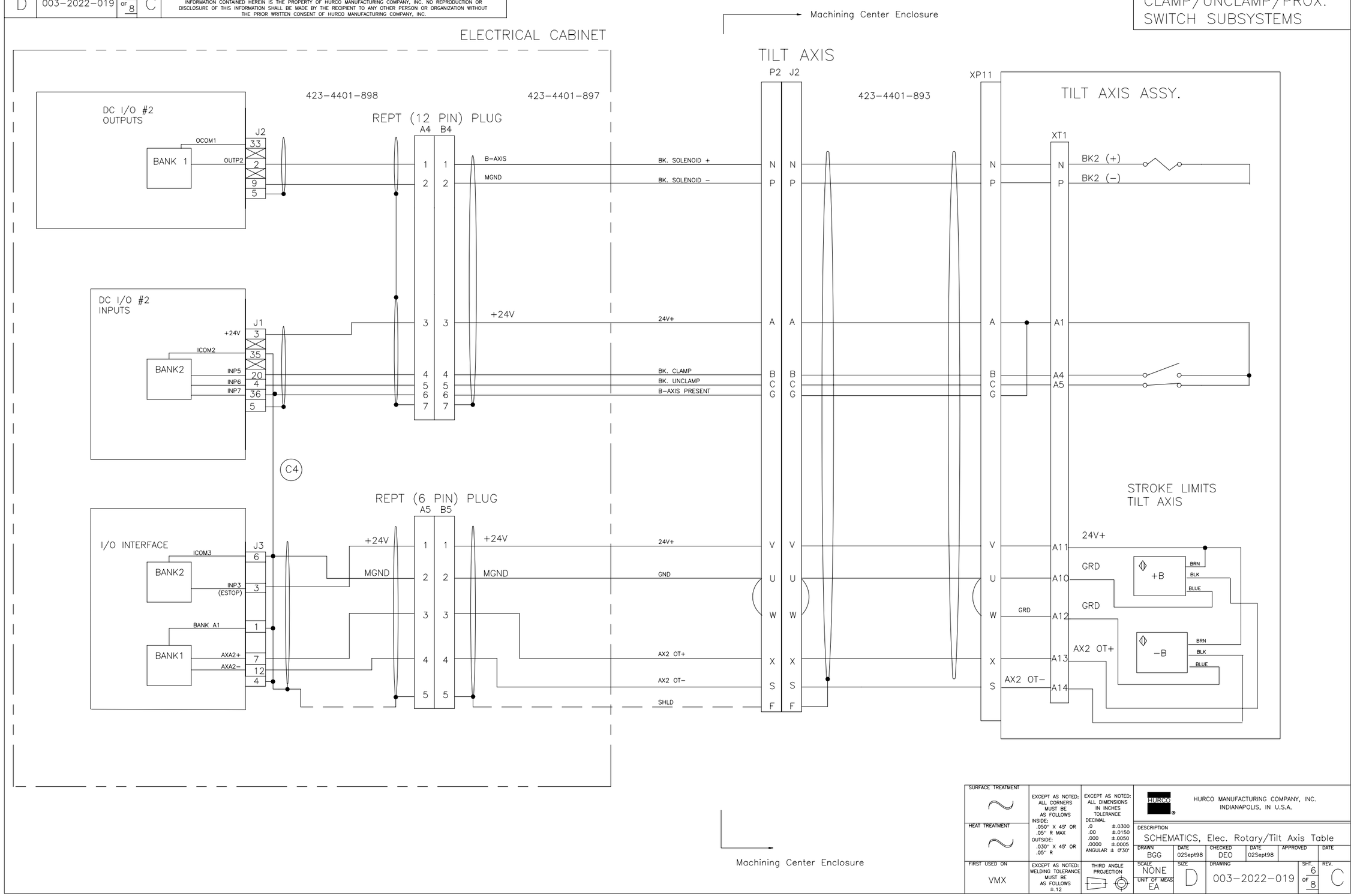


| | | | | |
|---|---|---|---|---|
| SURFACE TREATMENT | EXCEPT AS NOTED: ALL CORNERS MUST BE AS FOLLOWS INSIDE: .050" X 45° OR .05" R MAX OUTSIDE: .030" X 45° OR .05" R | EXCEPT AS NOTED: ALL DIMENSIONS IN INCHES TOLERANCE DECIMAL .0 ±.0300 .00 ±.0150 .000 ±.0050 .0000 ±.0005 ANGULAR ± 0°30' | HURCO MANUFACTURING COMPANY, INC. INDIANAPOLIS, IN U.S.A. | |
| HEAT TREATMENT | | | DESCRIPTION: SCHEMATICS, Elec. Rotary/Tilt Axis Table | |
| | | | DRAWN: BGG; DATE: 02Sept98; CHECKED: DEO; DATE: 02Sept98; APPROVED; DATE | |
| FIRST USED ON: VMX | EXCEPT AS NOTED: WELDING TOLERANCE MUST BE AS FOLLOWS ±.12 | THIRD ANGLE PROJECTION | SCALE: NONE; UNIT OF MEAS: EA; SIZE: D; DRAWING: 003-2022-019; SHT. 6 of 8; REV. C | |

| SIZE | DRAWING | SHT. / OF | REV. |
|---|---|---|---|
| D | 003-2022-019 | 7 / 8 | C |

PROPRIETARY INFORMATION

INFORMATION CONTAINED HEREIN IS THE PROPERTY OF HURCO MANUFACTURING COMPANY, INC. NO REPRODUCTION OR DISCLOSURE OF THIS INFORMATION SHALL BE MADE BY THE RECIPIENT TO ANY OTHER PERSON OR ORGANIZATION WITHOUT THE PRIOR WRITTEN CONSENT OF HURCO MANUFACTURING COMPANY, INC.

# B–AXIS DRIVE POWER & SIGNAL (VMX)

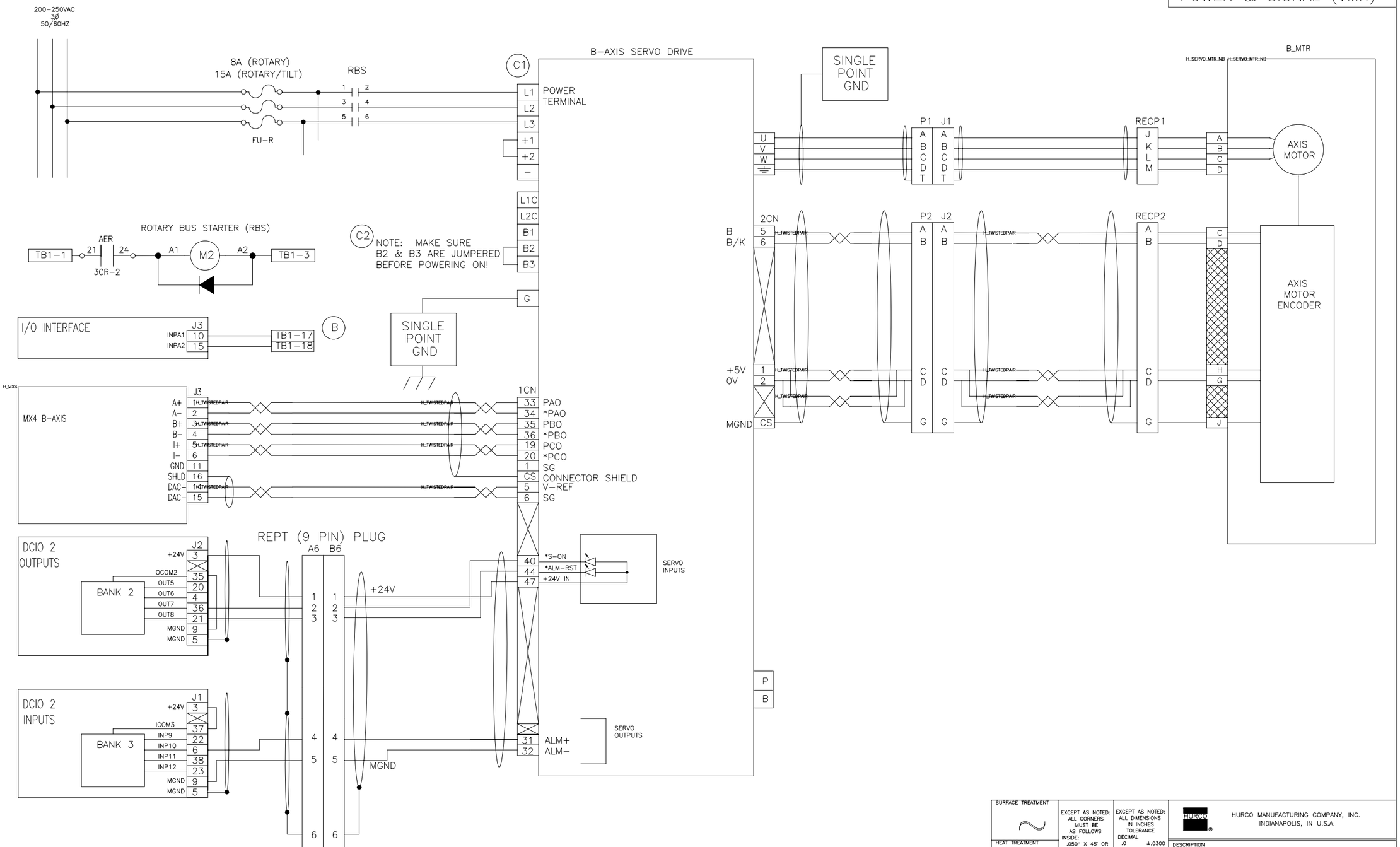


| | | | |
|---|---|---|---|
| SURFACE TREATMENT | EXCEPT AS NOTED: ALL CORNERS MUST BE AS FOLLOWS INSIDE: .050" X 45° OR .05" R MAX OUTSIDE: .030" X 45° OR .05" R | EXCEPT AS NOTED: ALL DIMENSIONS IN INCHES TOLERANCE DECIMAL .0 ±.0300, .00 ±.0150, .000 ±.0050, .0000 ±.0005 ANGULAR ± 0°30' | HURCO MANUFACTURING COMPANY, INC. INDIANAPOLIS, IN U.S.A. |
| HEAT TREATMENT | | | DESCRIPTION: SCHEMATICS, ELECTRICAL, ROTARY TABLE |
| FIRST USED ON: VMX | EXCEPT AS NOTED: WELDING TOLERANCE MUST BE AS FOLLOWS ±.12 | THIRD ANGLE PROJECTION | SCALE: NONE; UNIT OF MEAS: EA; SIZE: D; DRAWING: 003-2022-019; SHT. 7 OF 8; REV. C |

| DRAWN | DATE | CHECKED | DATE | APPROVED | DATE |
|---|---|---|---|---|---|
| SJT | 11JUL03 | DEO | 11JUL03 | | |

| SIZE | DRAWING | SHT. | REV. |
|---|---|---|---|
| D | 003-2022-019 | 8 OF 8 | C |

PROPRIETARY INFORMATION
INFORMATION CONTAINED HEREIN IS THE PROPERTY OF HURCO MANUFACTURING COMPANY, INC. NO REPRODUCTION OR DISCLOSURE OF THIS INFORMATION SHALL BE MADE BY THE RECIPIENT TO ANY OTHER PERSON OR ORGANIZATION WITHOUT THE PRIOR WRITTEN CONSENT OF HURCO MANUFACTURING COMPANY, INC.

TB-R I/O

C3

| | | | |
|---|---|---|---|
| SURFACE TREATMENT ~ | EXCEPT AS NOTED: ALL CORNERS MUST BE AS FOLLOWS<br>INSIDE: .050" X 45° OR .05" R MAX<br>OUTSIDE: .030" X 45° OR .05" R | EXCEPT AS NOTED: ALL DIMENSIONS IN INCHES TOLERANCE<br>DECIMAL<br>.0 ±.0300<br>.00 ±.0150<br>.000 ±.0050<br>.0000 ±.0005<br>ANGULAR ± 0°30' | HURCO MANUFACTURING COMPANY, INC. INDIANAPOLIS, IN U.S.A. |
| HEAT TREATMENT ~ | | | DESCRIPTION: SCHEMATICS, ELECTRICAL, ROTARY TABLE |
| FIRST USED ON: VMX | EXCEPT AS NOTED: WELDING TOLERANCE MUST BE AS FOLLOWS ±.12 | THIRD ANGLE PROJECTION | SCALE: NONE; UNIT OF MEAS: EA; SIZE: D; DRAWING: 003-2022-019; SHT: 8 OF 8; REV: C |

| DRAWN | DATE | CHECKED | DATE | APPROVED | DATE |
|---|---|---|---|---|---|
| SJT | 11JUL03 | DEO | 11JUL03 | | |

# Schematic, Renishaw Probes—Mach. Cntrs w/Siemens Spindle Systems, 007-3022-008—Rev. B

| SIZE | DRAWING | SHT. | REV. |
|---|---|---|---|
| C | 007-3022-008 | 1 OF 1 | B |

PROPRIETARY INFORMATION

INFORMATION CONTAINED HEREIN IS THE PROPERTY OF HURCO MANUFACTURING COMPANY, INC. NO REPRODUCTION OR DISCLOSURE OF THIS INFORMATION SHALL BE MADE BY THE RECIPIENT TO ANY OTHER PERSON OR ORGANIZATION WITHOUT THE PRIOR WRITTEN CONSENT OF HURCO MANUFACTURING COMPANY, INC.

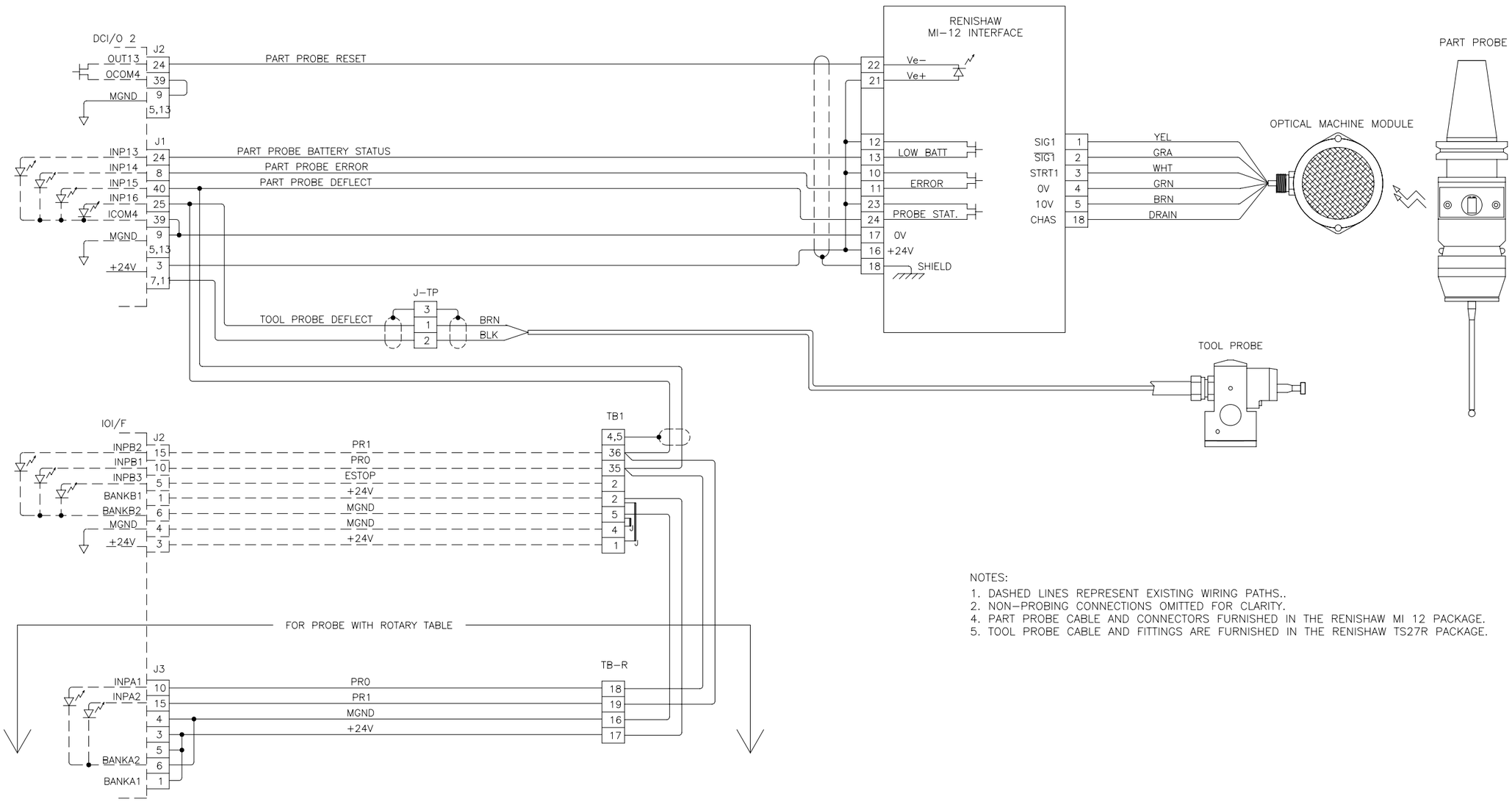


NOTES:

1. DASHED LINES REPRESENT EXISTING WIRING PATHS..
2. NON-PROBING CONNECTIONS OMITTED FOR CLARITY.
4. PART PROBE CABLE AND CONNECTORS FURNISHED IN THE RENISHAW MI 12 PACKAGE.
5. TOOL PROBE CABLE AND FITTINGS ARE FURNISHED IN THE RENISHAW TS27R PACKAGE.

| REV | E.C.N. NO. | REVISION DESCRIPTION | REV BY | DATE | CHK BY | DATE | APPD BY | DATE | DF |
|---|---|---|---|---|---|---|---|---|---|
| B | 15117 | Corrected RESET OUTPUT & BANK COMMON pinouts | RMN | 03 JAN 01 | | | | | |
| A | 14443 | RELEASE | | | | | | | |

SURFACE TREATMENT

HEAT TREATMENT

FIRST USED ON
BMC30 SERIES
BMC4020 SERIES

THIRD ANGLE PROJECTION

HURCO MANUFACTURING COMPANY, INC.
INDIANAPOLIS, IN U.S.A.

DESCRIPTION
SCHEMATIC, RENISHAW PROBES
– MACH. CNTRS W/SIEMENS SPINDLE SYSTEMS –

| DRAWN | DATE | CHECKED | DATE | APPROVED | DATE |
|---|---|---|---|---|---|
| MJW | 11/5/98 | GMS | 5/2/01 | DEO | 5/2/01 |

| SCALE | SIZE | DRAWING | SHT. | REV. |
|---|---|---|---|---|
| NONE | C | 007-3022-008 | 1 OF 1 | B |

UNIT OF MEAS
PC

| SIZE | DRAWING | SHT. | REV. |
|---|---|---|---|
| C | 007-3022-017 | 1 OF 1 | B |

PROPRIETARY INFORMATION

INFORMATION CONTAINED HEREIN IS THE PROPERTY OF HURCO MANUFACTURING COMPANY, INC. NO REPRODUCTION OR DISCLOSURE OF THIS INFORMATION SHALL BE MADE BY THE RECIPIENT TO ANY OTHER PERSON OR ORGANIZATION WITHOUT THE PRIOR WRITTEN CONSENT OF HURCO MANUFACTURING COMPANY, INC.

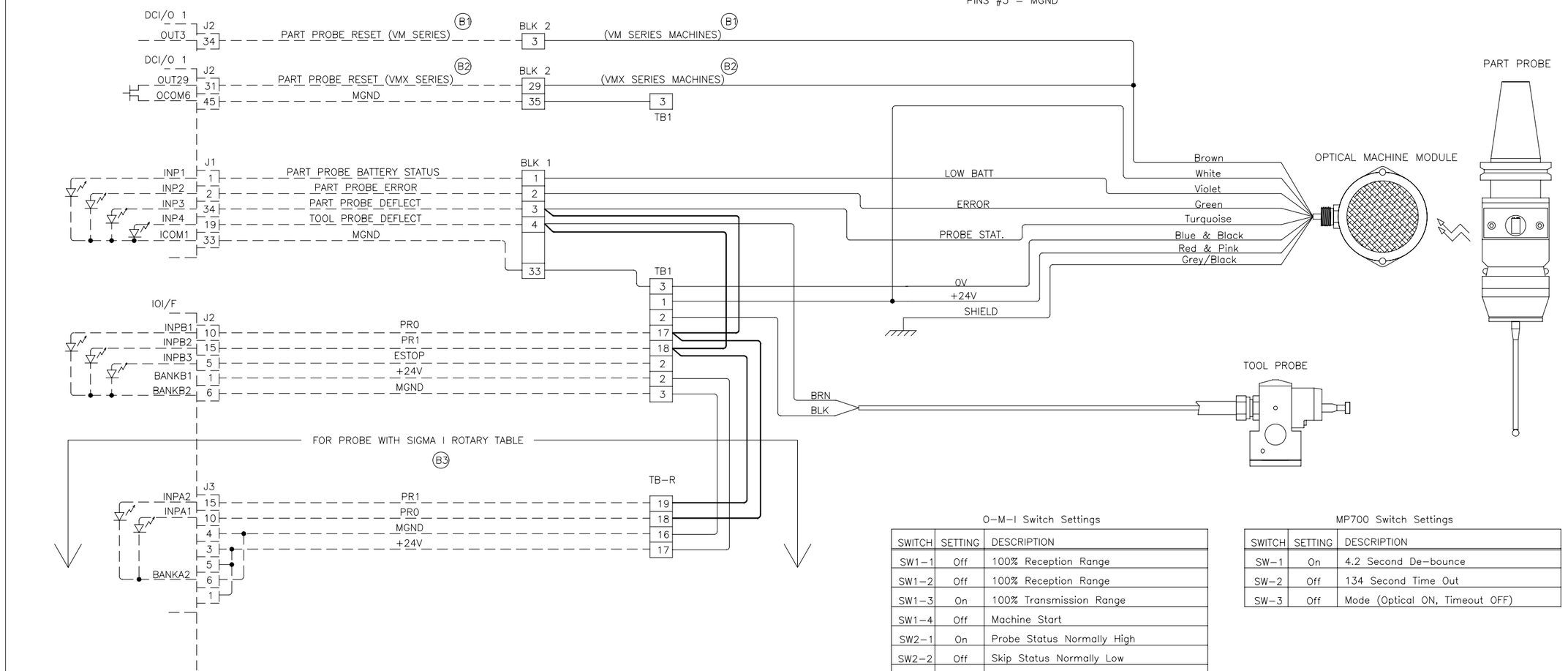


O-M-I Switch Settings

| SWITCH | SETTING | DESCRIPTION |
|---|---|---|
| SW1-1 | Off | 100% Reception Range |
| SW1-2 | Off | 100% Reception Range |
| SW1-3 | On | 100% Transmission Range |
| SW1-4 | Off | Machine Start |
| SW2-1 | On | Probe Status Normally High |
| SW2-2 | Off | Skip Status Normally Low |
| SW2-3 | Off | Low Battery Normally Low |
| SW2-4 | On | Error Normally High |

MP700 Switch Settings

| SWITCH | SETTING | DESCRIPTION |
|---|---|---|
| SW-1 | On | 4.2 Second De-bounce |
| SW-2 | Off | 134 Second Time Out |
| SW-3 | Off | Mode (Optical ON, Timeout OFF) |

NOTES:

1. DASHED LINES REPRESENT EXISTING WIRING PATHS..
2. NON-PROBING CONNECTIONS OMITTED FOR CLARITY.
3. FOR SIGMA II ROTARY TABLES, IOIF-J3 CONNECTION PROVISIONS ARE IN HARNESS, IOIF J3, SIGMA II
   (B4) POSSIBLE HARNESS, IOIF J3, SIGMA II P/N'S: 423-4401-887,-898,-909,-916,-934.
4. PART PROBE CABLE AND CONNECTORS FURNISHED IN THE RENISHAW MI 12 PACKAGE.
5. TOOL PROBE CABLE AND FITTINGS ARE FURNISHED IN THE RENISHAW TS27R PACKAGE.
6. JUMPER(S) FROM DCIO1/J1 TO IOIF/J2 & J3 MUST BE INSTALLED FOR PROPER OPERATION.

| REV | E.C.N. NO. | REVISION DESCRIPTION | REV BY | DATE | CHK BY | DATE | APPD BY | DATE | DF |
|---|---|---|---|---|---|---|---|---|---|
| B | 15717 | 3) ADDED SIGMA I DESIGNATION; 4) ADDED NOTE 3. 1) PART PROBE RESET FOR VM SERIES; 2) PART PROBE RESET FOR VMX SERIES | SJT | 03 AUG 04 | | | | | |
| A | 15117 | RELEASE | RMN | 03 JAN 01 | | | | | |

SURFACE TREATMENT

HEAT TREATMENT

FIRST USED ON
BMC 2416
VMX/VSX 24

THIRD ANGLE PROJECTION

HURCO MANUFACTURING COMPANY, INC.
INDIANAPOLIS, IN U.S.A.

DESCRIPTION
SCHEMATIC, RENISHAW PROBES
– MACH. CNTRS W/YASKAWA SIGMA DRIVES –

| DRAWN | DATE | CHECKED | DATE | APPROVED | DATE |
|---|---|---|---|---|---|
| RMN | 09/25/00 | GMS | 5/2/01 | DEO | 5/2/01 |

| SCALE | SIZE | DRAWING | SHT. | REV. |
|---|---|---|---|---|
| NONE | C | 007-3022-017 | 1 OF 1 | B |

UNIT OF MEAS: PC

# Schematic, Renishaw Laser Part Probe—Mach. Cntrs w/Yaskawa Sigma Drives, 007-3022-018—Rev. B

| SIZE | DRAWING | SHT. | REV. |
|---|---|---|---|
| C | 007-3022-018 | 1 OF 1 | B |

PROPRIETARY INFORMATION

INFORMATION CONTAINED HEREIN IS THE PROPERTY OF HURCO MANUFACTURING COMPANY, INC. NO REPRODUCTION OR DISCLOSURE OF THIS INFORMATION SHALL BE MADE BY THE RECIPIENT TO ANY OTHER PERSON OR ORGANIZATION WITHOUT THE PRIOR WRITTEN CONSENT OF HURCO MANUFACTURING COMPANY, INC.

RENISHAW NC-1

TB1 COMMON PINOUTS:

PINS #1 = +24V, SWITCHED
PINS #2 = +24V
PINS #3 = MGND

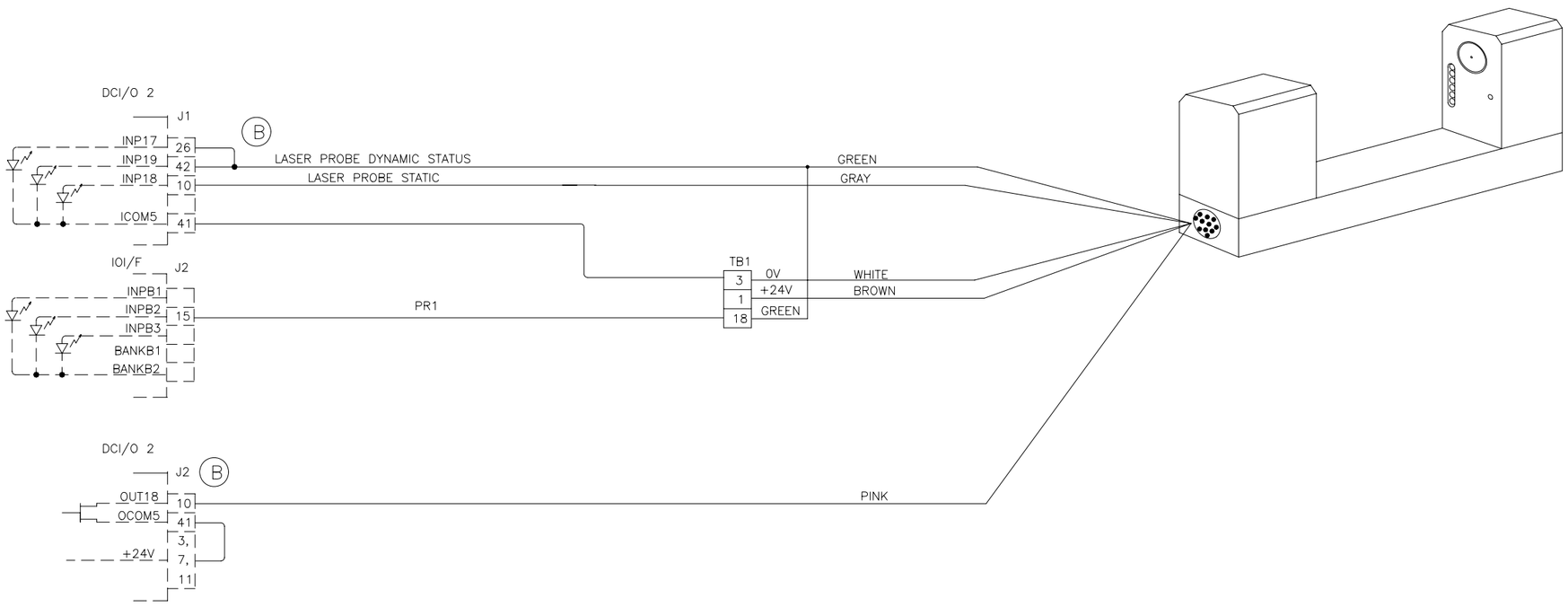


NC-1 Switch Settings (Renishaw)

| SWITCH | SETTING | DESCRIPTION |
|---|---|---|
| SW1 | Off | Output Polarity |
| SW2 | On | Output Pulse Width (100 mS) |
| SW3 | On | |
| SW4 | Off | Non-Dwell Mode |

CAUTION

LASER RADIATION –
DO NOT STARE INTO BEAM

1mW MAXIMUM OUTPUT
EMITTED WAVELENGTH 670 nm
CLASS II LASER PRODUCT

| REV | E.C.N. NO. | REVISION DESCRIPTION | REV BY | DATE | CHK BY | DATE | APPD BY | DATE | DF |
|---|---|---|---|---|---|---|---|---|---|
| B | 15355 | ADDED/DELETED CONNECTIONS. | MJW | 17 OCT 01 | | | | | |
| A | 15117 | RELEASE | RMN | 03 JAN 01 | | | | | |

SURFACE TREATMENT

HEAT TREATMENT

FIRST USED ON
BMC 2416
VMX/VSX 24

THIRD ANGLE PROJECTION

HURCO MANUFACTURING COMPANY, INC.
INDIANAPOLIS, IN U.S.A.

DESCRIPTION: SCHEMATIC, RENISHAW LASER PART PROBE MACH. CNTRS W/YASKAWA SIGMA DRIVES

| DRAWN | DATE | CHECKED | DATE | APPROVED | DATE |
|---|---|---|---|---|---|
| RMN | 09/25/00 | GMS | 5/2/01 | DEO | 5/2/01 |

| SCALE | SIZE | DRAWING | SHT. | REV. |
|---|---|---|---|---|
| NONE | C | 007-3022-018 | 1 OF 1 | B |

UNIT OF MEAS: PC

| SIZE | DRAWING | SHT. | REV. |
|---|---|---|---|
| C | 007-3022-019 | 1 OF 1 | A |

PROPRIETARY INFORMATION

INFORMATION CONTAINED HEREIN IS THE PROPERTY OF HURCO MANUFACTURING COMPANY, INC. NO REPRODUCTION OR DISCLOSURE OF THIS INFORMATION SHALL BE MADE BY THE RECIPIENT TO ANY OTHER PERSON OR ORGANIZATION WITHOUT THE PRIOR WRITTEN CONSENT OF HURCO MANUFACTURING COMPANY, INC.

# BLUM Micro-Support Ver.

TB1 COMMON PINOUTS:

PINS #1 = +24V, SWITCHED
PINS #2 = +24V
PINS #3 = MGND

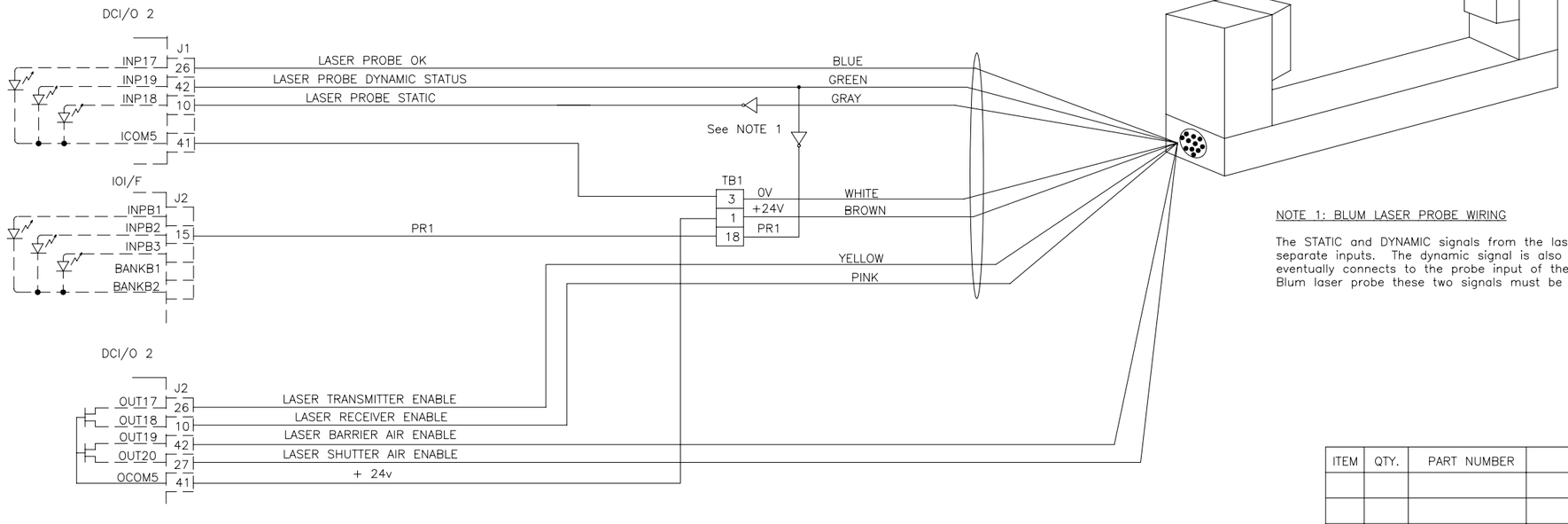


NOTE 1: BLUM LASER PROBE WIRING

The STATIC and DYNAMIC signals from the laser probe are wired to two separate inputs. The dynamic signal is also routed to the IOIF card where it eventually connects to the probe input of the motion card. When using the Blum laser probe these two signals must be inverted using hardware.

| ITEM | QTY. | PART NUMBER | DESCRIPTION |
|---|---|---|---|
| | | | |
| | | | |
| 7 | 2 | 406-4006-002 | END STOP, GREY |
| 6 | 1 | 406-4006-088 | END PLATE, 4-COND, GREY |
| 5 | 2 | 407-0036-081 | RESISTOR, 3.3 K, 1/4 W, 5% |
| 4 | 4" | 406-4007-002 | DIN RAIL |
| 3 | 4 | 406-4005-299 | TERMINAL BLOCK, 4-COND |
| 2 | 1 | 406-4005-336 | TERMINAL BLOCK, 8-POLE, W/SEPARATOR |
| 1 | 1 | 402-0004-005 | OPTOCOUPLER, DUAL-CHANNEL, 24 VDC |

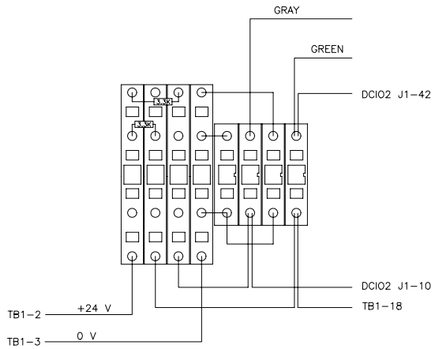


Wiring Diagram

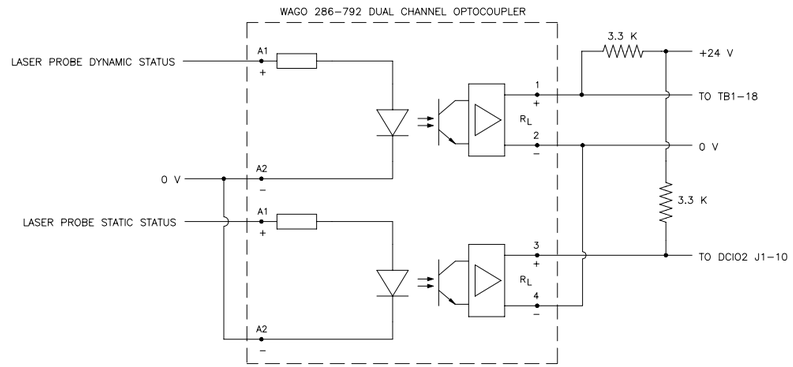


Schematic Diagram

CAUTION

LASER RADIATION –
DO NOT STARE INTO BEAM
1mW MAXIMUM OUTPUT
EMITTED WAVELENGTH 670 nm
CLASS II LASER PRODUCT

| REV | E.C.N. NO. | REVISION DESCRIPTION | REV BY | DATE | CHK BY | DATE | APPD BY | DATE | DF |
|---|---|---|---|---|---|---|---|---|---|
| A | 15117 | RELEASE | RMN | 03 JAN 01 | | | | | |

SURFACE TREATMENT

HEAT TREATMENT

FIRST USED ON
BMC 2416
VMX/VSX 24

THIRD ANGLE PROJECTION

HURCO MANUFACTURING COMPANY, INC.
INDIANAPOLIS, IN U.S.A.

DESCRIPTION: SCHEMATIC, BLUM LASER PART PROBE MACH. CNTRS W/YASKAWA SIGMA DRIVES

| DRAWN | DATE | CHECKED | DATE | APPROVED | DATE |
|---|---|---|---|---|---|
| RMN | 09/25/00 | GMS | 5/2/01 | DEO | 5/2/01 |

| SCALE | SIZE | DRAWING | SHT. | REV. |
|---|---|---|---|---|
| NONE | C | 007-3022-019 | 1 OF 1 | A |

UNIT OF MEAS: PC

# Schematic, Renishaw Probes—Mach. Cntrs (Pre-Sigma Drives), 007-3022-020—Rev. A

| SIZE | DRAWING | SHT. | REV. |
|---|---|---|---|
| C | 007-3022-020 | 1 OF 1 | A |

PROPRIETARY INFORMATION

INFORMATION CONTAINED HEREIN IS THE PROPERTY OF HURCO MANUFACTURING COMPANY, INC. NO REPRODUCTION OR DISCLOSURE OF THIS INFORMATION SHALL BE MADE BY THE RECIPIENT TO ANY OTHER PERSON OR ORGANIZATION WITHOUT THE PRIOR WRITTEN CONSENT OF HURCO MANUFACTURING COMPANY, INC.

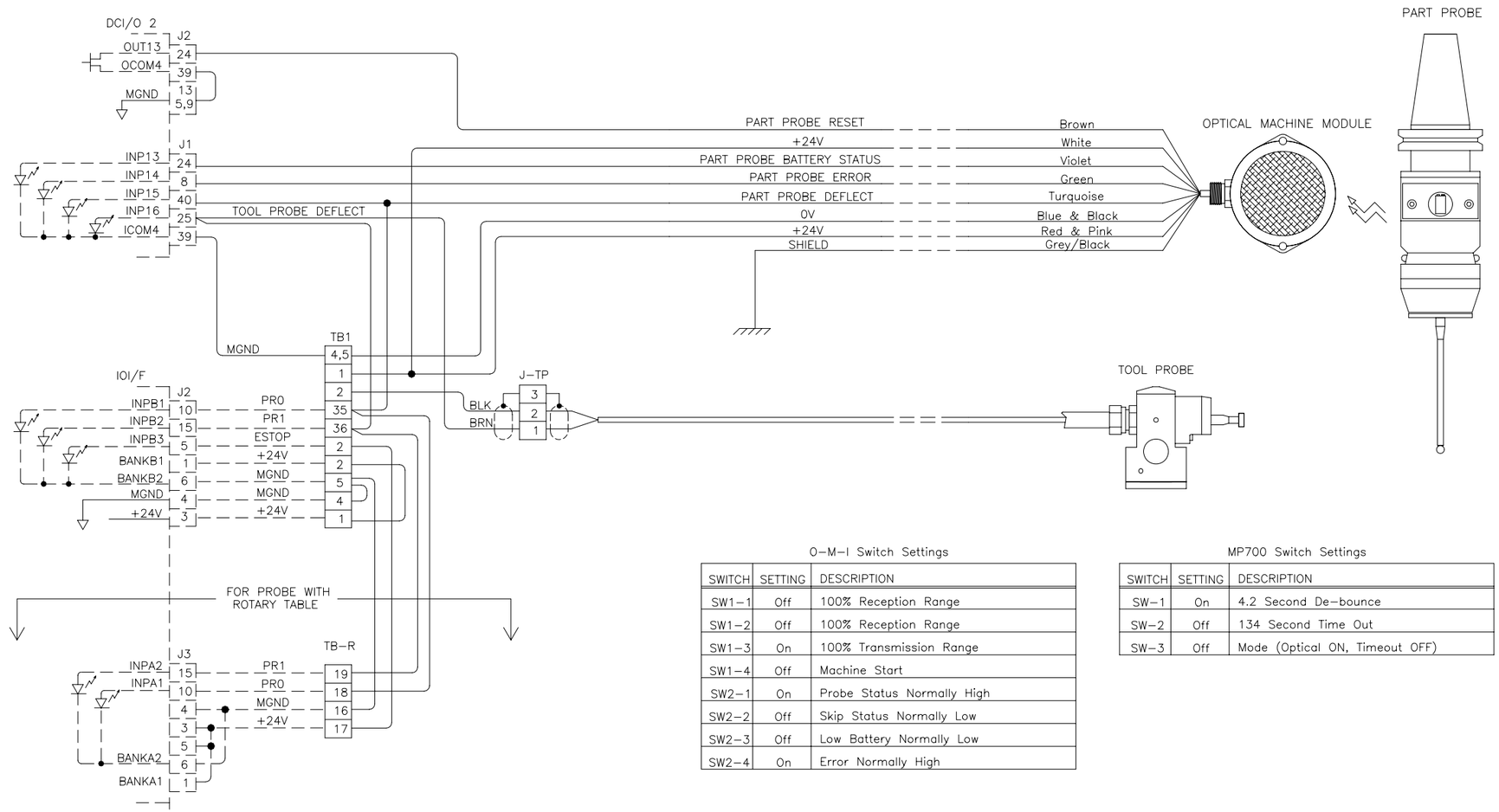


O-M-I Switch Settings

| SWITCH | SETTING | DESCRIPTION |
|---|---|---|
| SW1-1 | Off | 100% Reception Range |
| SW1-2 | Off | 100% Reception Range |
| SW1-3 | On | 100% Transmission Range |
| SW1-4 | Off | Machine Start |
| SW2-1 | On | Probe Status Normally High |
| SW2-2 | Off | Skip Status Normally Low |
| SW2-3 | Off | Low Battery Normally Low |
| SW2-4 | On | Error Normally High |

MP700 Switch Settings

| SWITCH | SETTING | DESCRIPTION |
|---|---|---|
| SW-1 | On | 4.2 Second De-bounce |
| SW-2 | Off | 134 Second Time Out |
| SW-3 | Off | Mode (Optical ON, Timeout OFF) |

NOTES:
1. DASHED LINES REPRESENT EXISTING WIRING PATHS..
2. NON-PROBING CONNECTIONS OMITTED FOR CLARITY.
4. PART PROBE CABLE AND CONNECTORS FURNISHED IN THE RENISHAW MI 12 PACKAGE.
5. TOOL PROBE CABLE AND FITTINGS ARE FURNISHED IN THE RENISHAW TS27R PACKAGE.
6. JUMPER(S) FROM DCIO1/J1 TO IOIF/J2 & J3 MUST BE INSTALLED FOR PROPER OPERATION.

| REV | E.C.N. NO. | REVISION DESCRIPTION | REV BY | DATE | CHK BY | DATE | APPD BY | DATE | DF |
|---|---|---|---|---|---|---|---|---|---|
| A | 15117 | RELEASE | RMN | 03 JAN 01 | | | | | |

SURFACE TREATMENT

HEAT TREATMENT

FIRST USED ON: BMC 30

THIRD ANGLE PROJECTION

HURCO MANUFACTURING COMPANY, INC.
INDIANAPOLIS, IN U.S.A.

DESCRIPTION: SCHEMATIC, RENISHAW PROBES MACH. CNTRS (PRE-SIGMA DRIVES)

| DRAWN | DATE | CHECKED | DATE | APPROVED | DATE |
|---|---|---|---|---|---|
| RMN | 09/25/00 | GMS | 5/2/01 | DEO | 5/2/01 |

| SCALE | SIZE | DRAWING | SHT. | REV. |
|---|---|---|---|---|
| NONE | C | 007-3022-020 | 1 OF 1 | A |

UNIT OF MEAS: PC

| SIZE | DRAWING | SHT. | REV. |
|---|---|---|---|
| C | 007-3022-021 | 1 OF 1 | B |

PROPRIETARY INFORMATION

INFORMATION CONTAINED HEREIN IS THE PROPERTY OF HURCO MANUFACTURING COMPANY, INC. NO REPRODUCTION OR DISCLOSURE OF THIS INFORMATION SHALL BE MADE BY THE RECIPIENT TO ANY OTHER PERSON OR ORGANIZATION WITHOUT THE PRIOR WRITTEN CONSENT OF HURCO MANUFACTURING COMPANY, INC.

RENISHAW NC-1

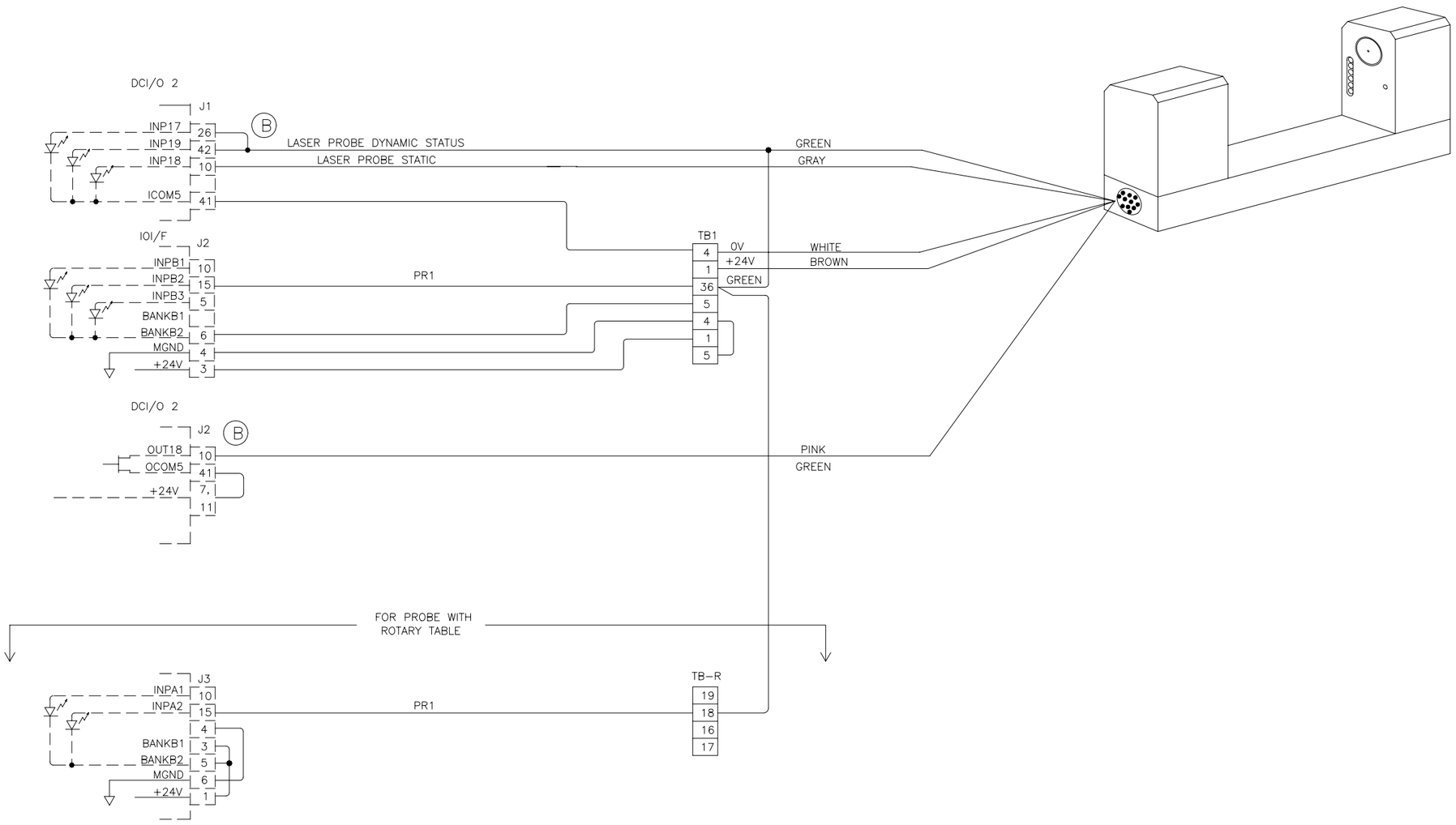


CAUTION

LASER RADIATION – DO NOT STARE INTO BEAM

1mW MAXIMUM OUTPUT
EMITTED WAVELENGTH 670 nm
CLASS II LASER PRODUCT

NC-1 Switch Settings (Renishaw)

| SWITCH | SETTING | DESCRIPTION |
|---|---|---|
| SW1 | Off | Output Polarity |
| SW2 | On | Output Pulse Width (100 mS) |
| SW3 | On | |
| SW4 | Off | Non-Dwell Mode |

| REV | E.C.N. NO. | REVISION DESCRIPTION | REV BY | DATE | CHK BY | DATE | APPD BY | DATE | DF |
|---|---|---|---|---|---|---|---|---|---|
| B | 15355 | ADDED/DELETED CONNECTIONS. | MJW | 17 OCT 01 | | | | | |
| A | 15117 | RELEASE | RMN | 03 JAN 01 | | | | | |

SURFACE TREATMENT

HEAT TREATMENT

FIRST USED ON
BMC 30

THIRD ANGLE PROJECTION

HURCO MANUFACTURING COMPANY, INC.
INDIANAPOLIS, IN U.S.A.

DESCRIPTION: SCHEMATIC, RENISHAW LASER PART PROBE MACH. CNTRS (PRE-SIGMA) DRIVES

| DRAWN | DATE | CHECKED | DATE | APPROVED | DATE |
|---|---|---|---|---|---|
| RMN | 09/25/00 | GMS | 5/2/01 | DEO | 5/2/01 |

| SCALE | SIZE | DRAWING | SHT. | REV. |
|---|---|---|---|---|
| NONE | C | 007-3022-021 | 1 OF 1 | B |

UNIT OF MEAS: PC

# Schematic, Blum Laser Part Probe—Mach. Cntrs (Pre-Sigma) Drives, 007-3022-022—Rev. A

| SIZE | DRAWING | SHT. | REV. |
|---|---|---|---|
| C | 007-3022-022 | 1 OF 1 | A |

PROPRIETARY INFORMATION

INFORMATION CONTAINED HEREIN IS THE PROPERTY OF HURCO MANUFACTURING COMPANY, INC. NO REPRODUCTION OR DISCLOSURE OF THIS INFORMATION SHALL BE MADE BY THE RECIPIENT TO ANY OTHER PERSON OR ORGANIZATION WITHOUT THE PRIOR WRITTEN CONSENT OF HURCO MANUFACTURING COMPANY, INC.

BLUM Micro-Support Ver.

NOTE 1: BLUM LASER PROBE WIRING

The STATIC and DYNAMIC signals from the laser probe are wired to two separate inputs. The dynamic signal is also routed to the IOIF card where it eventually connects to the probe input of the motion card. When using the Blum laser probe these two signals must be inverted using hardware.

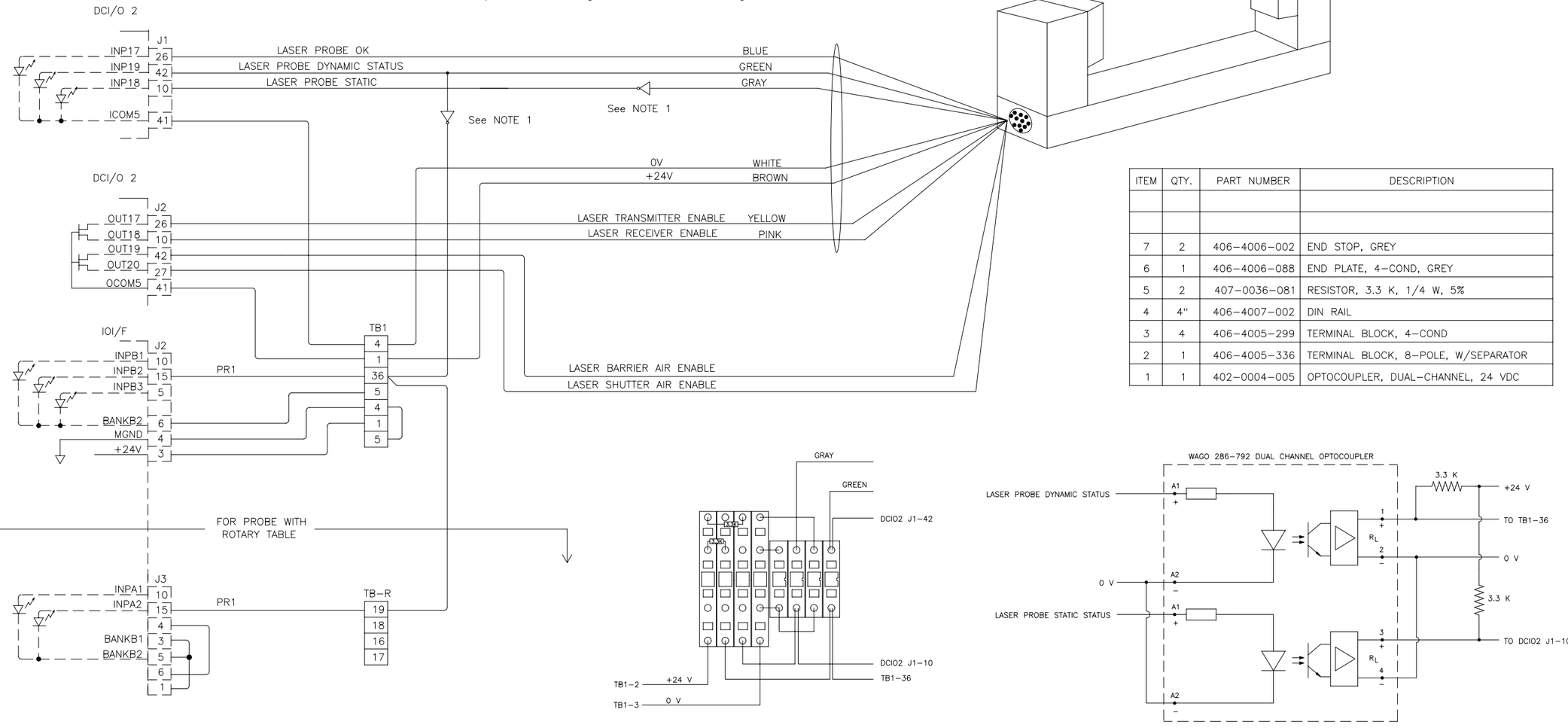


| ITEM | QTY. | PART NUMBER | DESCRIPTION |
|---|---|---|---|
| | | | |
| | | | |
| 7 | 2 | 406-4006-002 | END STOP, GREY |
| 6 | 1 | 406-4006-088 | END PLATE, 4-COND, GREY |
| 5 | 2 | 407-0036-081 | RESISTOR, 3.3 K, 1/4 W, 5% |
| 4 | 4'' | 406-4007-002 | DIN RAIL |
| 3 | 4 | 406-4005-299 | TERMINAL BLOCK, 4-COND |
| 2 | 1 | 406-4005-336 | TERMINAL BLOCK, 8-POLE, W/SEPARATOR |
| 1 | 1 | 402-0004-005 | OPTOCOUPLER, DUAL-CHANNEL, 24 VDC |




Wiring Diagram




Schematic Diagram

CAUTION

LASER RADIATION —
DO NOT STARE INTO BEAM

1mW MAXIMUM OUTPUT
EMITTED WAVELENGTH 670 nm
CLASS II LASER PRODUCT

| REV | E.C.N. NO. | REVISION DESCRIPTION | REV BY | DATE | CHK BY | DATE | APPD BY | DATE | DF |
|---|---|---|---|---|---|---|---|---|---|
| A | 15117 | RELEASE | RMN | 03 JAN 01 | | | | | |

SURFACE TREATMENT

HEAT TREATMENT

FIRST USED ON: BMC 30

THIRD ANGLE PROJECTION

HURCO MANUFACTURING COMPANY, INC.
INDIANAPOLIS, IN U.S.A.

DESCRIPTION: SCHEMATIC, BLUM LASER PART PROBE MACH. CNTRS (PRE-SIGMA) DRIVES

| DRAWN | DATE | CHECKED | DATE | APPROVED | DATE |
|---|---|---|---|---|---|
| RMN | 09/25/00 | GMS | 5/2/01 | DEO | 5/2/01 |

| SCALE | SIZE | DRAWING | SHT. | REV. |
|---|---|---|---|---|
| NONE | C | 007-3022-022 | 1 OF 1 | A |

UNIT OF MEAS: PC

| SIZE | DRAWING | SHT. | REV. |
|---|---|---|---|
| D | 003-0101-004 | 1 OF 1 | D |

PROPRIETARY INFORMATION

INFORMATION CONTAINED HEREIN IS THE PROPERTY OF HURCO COMPANIES, INC. NO REPRODUCTION OR DISCLOSURE OF THIS INFORMATION SHALL BE MADE BY THE RECIPIENT TO ANY OTHER PERSON OR ORGANIZATION WITHOUT THE PRIOR WRITTEN CONSENT OF HURCO COMPANIES, INC.

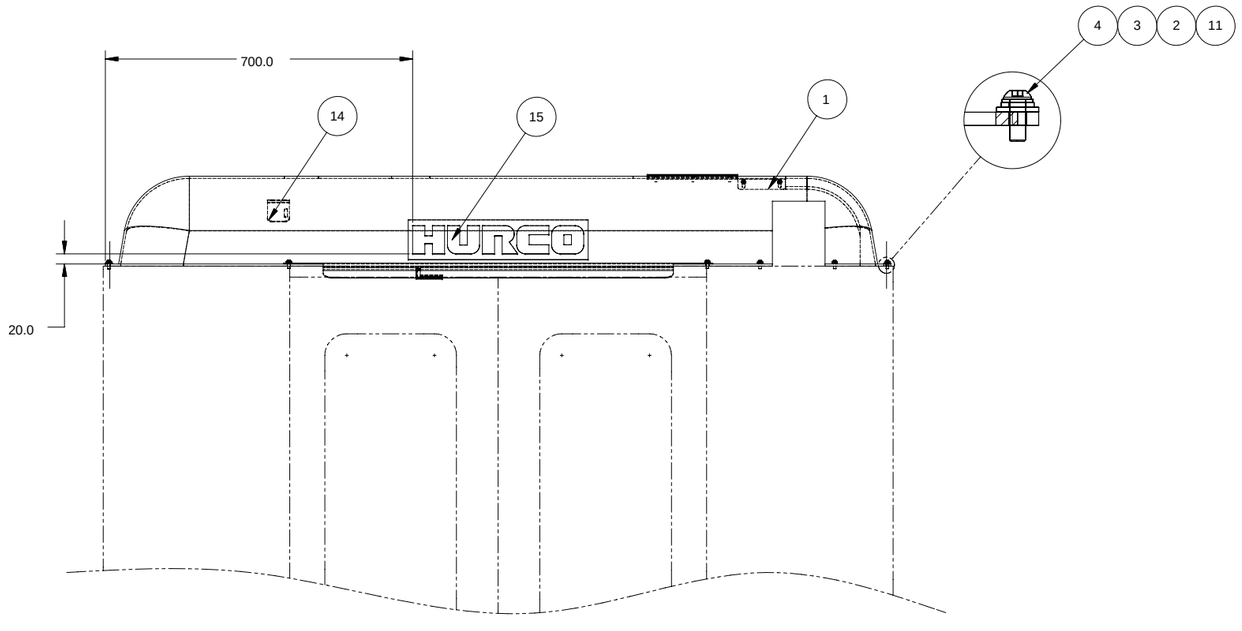


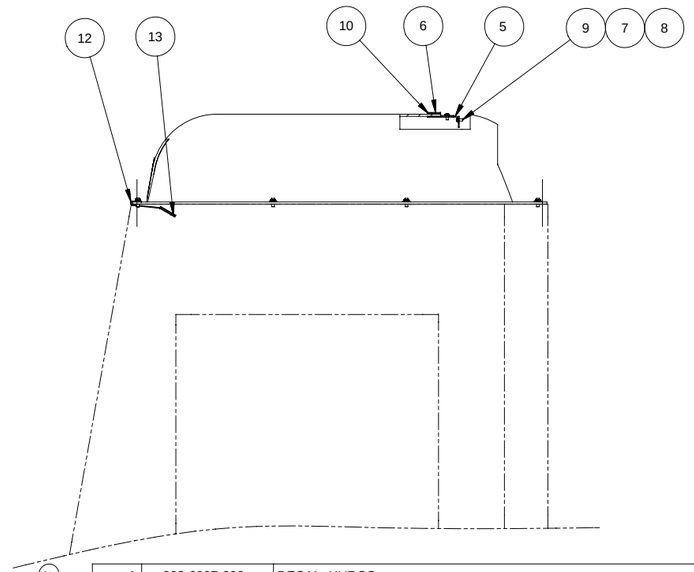


| QTY. | PART NO. | DESCRIPTION | ITEM |
|---|---|---|---|
| 1 | 803-6007-008 | DECAL, HURCO | 15 |
| 1 | 803-0101-040 | BRACKET, CLEAR DOME, ATC | 14 |
| 30" ---1 | 342-0001-006 | TRIM | 13 |
| 1 | 803-0102-029 | COVER, CLEAR DOME | 12 |
| 10 | 110-0046-007 | LOCKWASHER, M6, HELICAL SPRING | 11 |
| 1 | 331-0001-009 | STRIPPING, WEATHER, 1/8 THICK x 1/2 WIDE | 10 |
| 5 | 108-5003-004 | BHCS, M 5 X 0.8 P X 12 LG | 9 |
| 5 | 110-0046-006 | LOCKWASHER, M5, HELICAL SPRING | 8 |
| 5 | 110-5001-003 | WASHER, FLAT, M5 | 7 |
| 1 | 803-0106-015 | CLAMP, TOP HOOD | 6 |
| 1 | 803-0101-030 | BRACKET, TOP HOOD | 5 |
| 10 | 108-5004-004 | BHSCS, M 6 X 1.0 P 16 LG | 4 |
| 10 | 110-5001-004 | WASHER, FLAT, M6 | 3 |
| 8 | 110-0091-002 | WASHER, RUBBER | 2 |
| 1 | 803-0104-007 | CLEAR DOME, SSM | 1 |

| REV | E.C.N. NO. | REVISION DESCRIPTION | REV BY | DATE | CHK BY | DATE | APPD BY | DATE |
|---|---|---|---|---|---|---|---|---|
| . | . | | | | | | | |
| . | . | | | | | | | |
| . | . | | | | | | | |
| . | . | | | | | | | |
| D | 15885 | (1) ADDED ITEM 15 , (2) WAS QTY 0, (3) CHANGE NAME (4) WAS QTY 8, (5) WAS 608-2003-111 | Kevin | 05-20-2003 | MLE | 06-20-2003 | SMc | 7-27-2005 |
| C | 15517 | (1) ITEMS 12~14 ADDED, (2)QTY WAS 8, (3) QTY WAS 16 | Kevin | 09-27-2002 | MLE | 09-27-2002 | JLW | 10-03-2002 |
| B | 15484 | DRAWING RELEASE | JLW | 09-24-2002 | JLW | 09-24-2002 | JLW | 09-24-2002 |
| A | 15487 | ORIGINAL RELEASE WITH NO DRAWING | | | | | | |

SURFACE TREATMENT: NONE

HEAT TREATMENT: NONE

FIRST USED ON: VM1

EXCEPT AS NOTED: ALL CORNERS MUST BE AS FOLLOWS
INSIDE: 1.3 X 45° OR 1.3 R MAX
OUTSIDE: 0.8 X 45° OR 1.3 R

EXCEPT AS NOTED: WELDING TOLERANCE MUST BE AS FOLLOWS
±3

EXCEPT AS NOTED: ALL DIMENSIONS IN METRIC TOLERANCE
DECIMAL
.0 ±0.8
.00 ±0.4
.000 ±0.13
.0000 ±0.013
ANGULAR ±0°30'

HURCO COMPANIES, INC.
INDIANAPOLIS, IN U.S.A.

DESCRIPTION: ASS'Y, CLEAR DOME

| DRAWN | DATE | CHECKED | DATE | APPROVED | DATE |
|---|---|---|---|---|---|
| Kevin | 06-27-02 | MEL | 06-28-02 | JLW | 09-18-02 |

| SCALE | SIZE | DRAWING | SHT. | REV. |
|---|---|---|---|---|
| 1:6 | D | 003-0101-004 | 1 OF 1 | D |

UNIT OF MEAS.: PC

# Ass'y., Top Hood, Clear Plastic Dome, DSM, 003-0101-005—Rev. B

| SIZE | DRAWING | SHT. | REV. |
|---|---|---|---|
| D | 003-0101-005 | 1 OF 1 | B |

PROPRIETARY INFORMATION

INFORMATION CONTAINED HEREIN IS THE PROPERTY OF HURCO COMPANIES, INC. NO REPRODUCTION OR DISCLOSURE OF THIS INFORMATION SHALL BE MADE BY THE RECIPIENT TO ANY OTHER PERSON OR ORGANIZATION WITHOUT THE PRIOR WRITTEN CONSENT OF HURCO COMPANIES, INC.

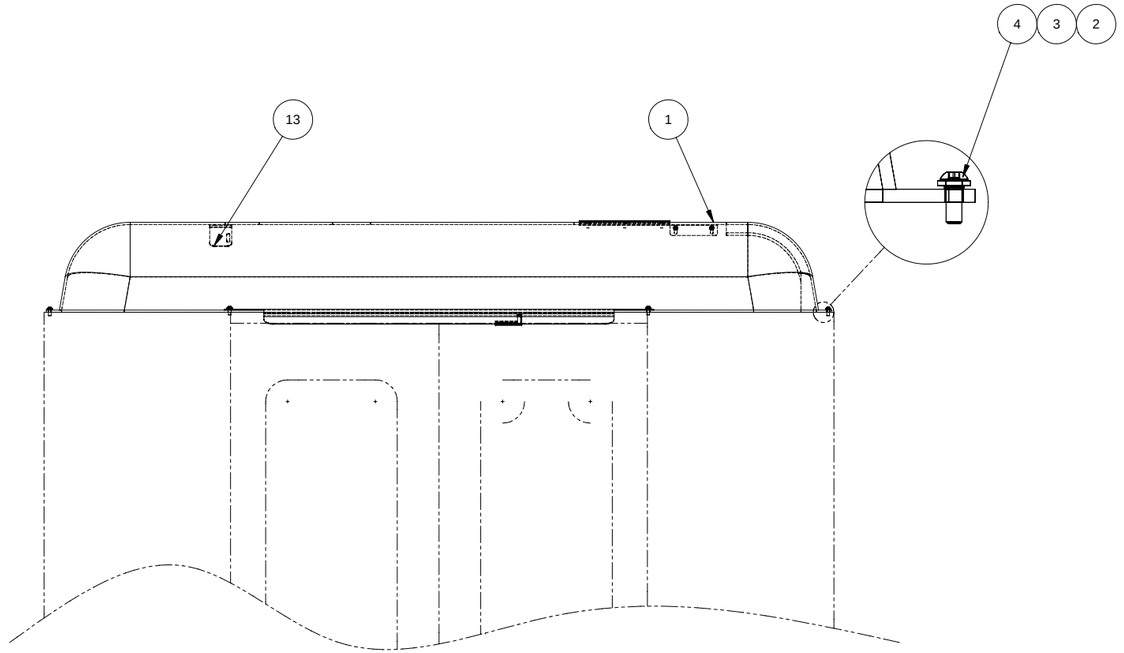


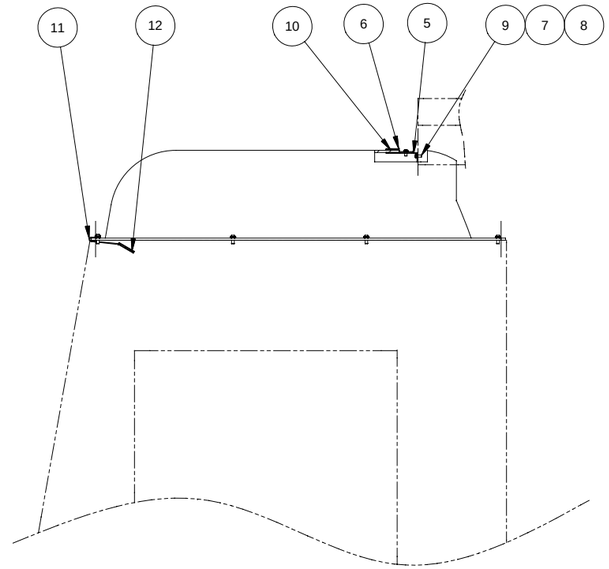


| ITEM | QTY. | PART NO. | DESCRIPTION |
|---|---|---|---|
| 13 | 30" ~~1~~ | 803-0101-040 | BRACKET, CLEAR DOME, ATC |
| 12 | 1 | 342-0001-006 | TRIM |
| 11 | 1 | 803-0102-029 | COVER, CLEAR DOME |
| 10 | 1 | 331-0001-009 | STRIPPING, WEATHER, 1/8 THICK x 1/2 WIDE |
| 9 | 5 | 108-5003-004 | BHCS, M 5 X 0.8 P X 12 LG |
| 8 | 5 | 110-0046-006 | LOCKWASHER, M5, HELICAL SPRING |
| 7 | 5 | 110-5001-003 | WASHER, FLAT, M5 |
| 6 | 1 | 803-0106-015 | CLAMP, TOP HOOD |
| 5 | 1 | 803-0101-030 | BRACKET, TOP HOOD |
| 4 | 8 | 108-5004-004 | BHSCS, M 6 X 1.0 P 16 LG |
| 3 | 8 | 110-5001-004 | WASHER, FLAT, M6 |
| 2 | 8 | 608-2003-111 | O-RING, P-6 |
| 1 | 1 | 803-0104-008 | CLEAR DOME, DSM |

| REV | E.C.N. NO. | REVISION DESCRIPTION | REV BY | DATE | CHK BY | DATE | APPD BY | DATE |
|---|---|---|---|---|---|---|---|---|
| B | 15517 | (1) ITEMS 12~14 ADDED, (2) DEL. 110-0046-007 QTY 8, (3) DEL. 110-5001-004 QTY 16 | Kevin | 06-28-02 | MEL | 06-28-02 | JLW | 10-03-2002 |
| A | 15484 | ORIGINAL RELEASE | | | | | | |

SURFACE TREATMENT: NONE

HEAT TREATMENT: NONE

FIRST USED ON: VM1

EXCEPT AS NOTED: ALL CORNERS MUST BE AS FOLLOWS
INSIDE: 1.3 X 45° OR 1.3 R MAX
OUTSIDE: 0.8 X 45° OR 1.3 R

EXCEPT AS NOTED: WELDING TOLERANCE MUST BE AS FOLLOWS ±°

EXCEPT AS NOTED: ALL DIMENSIONS IN METRIC TOLERANCE
DECIMAL: .0 ±0.8; .00 ±0.4; .000 ±0.13; .0000 ±0.013; ANGULAR ±1°30'

HURCO COMPANIES, INC.
INDIANAPOLIS, IN U.S.A.

DESCRIPTION: ASS'Y, TOP HOOD, CLEAR PLASTIC DOME, DSM

| DRAWN | DATE | CHECKED | DATE | APPROVED | DATE |
|---|---|---|---|---|---|
| Kevin | 06-28-02 | MEL | 06-28-02 | JLW | 09-19-02 |

SCALE: 1:6
UNIT OF MEAS.: PC
SIZE: D
DRAWING: 003-0101-005
SHT. 1 OF 1
REV. B

| SIZE | DRAWING | SHT. | REV. |
|---|---|---|---|
| C | 003-0101-008 | 1 OF 1 | C |

**PROPRIETARY INFORMATION**

INFORMATION CONTAINED HEREIN IS THE PROPERTY OF HURCO COMPANIES, INC. NO REPRODUCTION OR DISCLOSURE OF THIS INFORMATION SHALL BE MADE BY THE RECIPIENT TO ANY OTHER PERSON OR ORGANIZATION WITHOUT THE PRIOR WRITTEN CONSENT OF HURCO COMPANIES, INC.

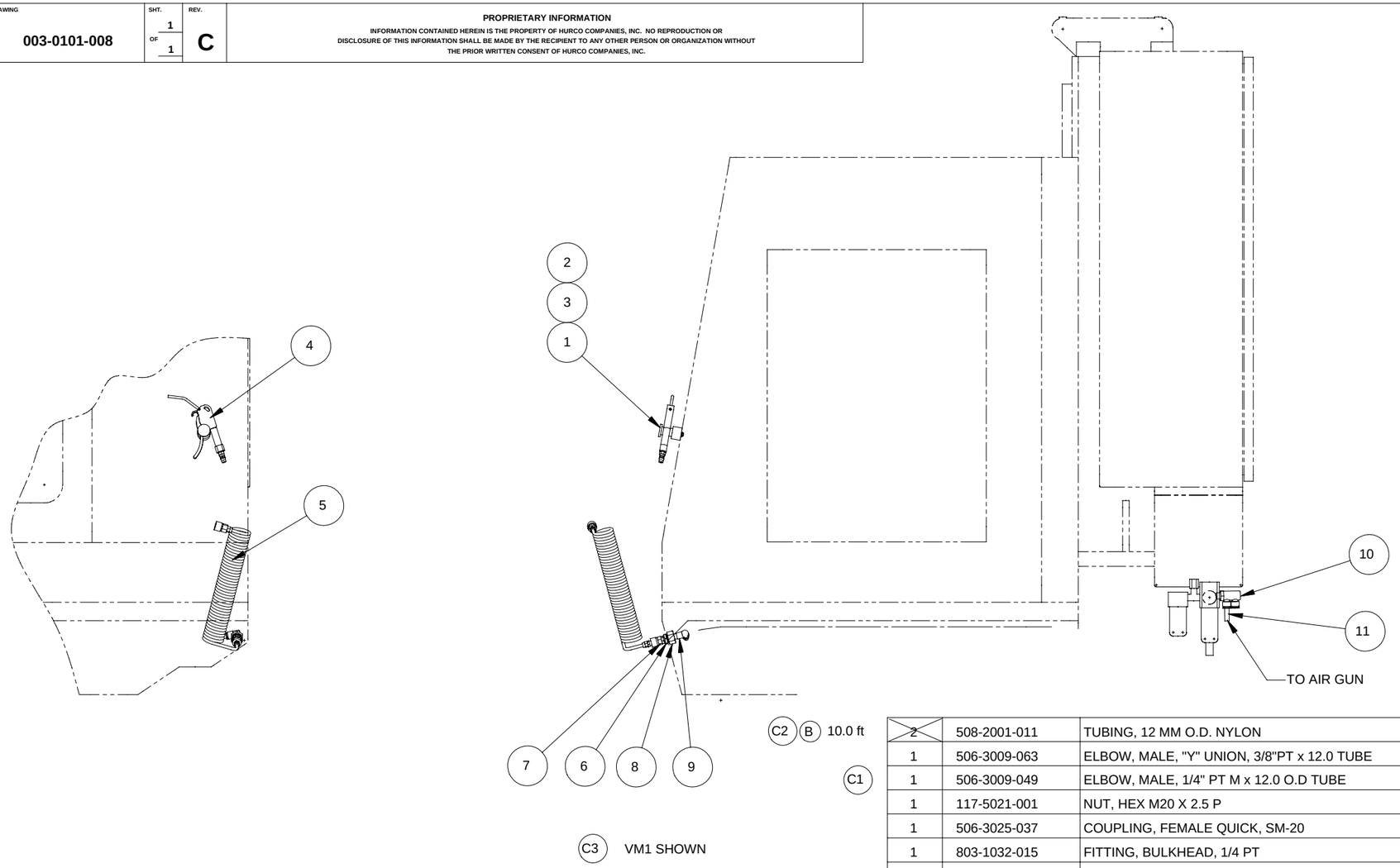


| QTY. | PART NO. | DESCRIPTION | ITEM |
|---|---|---|---|
| ~~2~~ | 508-2001-011 | TUBING, 12 MM O.D. NYLON | 11 |
| 1 | 506-3009-063 | ELBOW, MALE, "Y" UNION, 3/8"PT x 12.0 TUBE | 10 |
| 1 | 506-3009-049 | ELBOW, MALE, 1/4" PT M x 12.0 O.D TUBE | 9 |
| 1 | 117-5021-001 | NUT, HEX M20 X 2.5 P | 8 |
| 1 | 506-3025-037 | COUPLING, FEMALE QUICK, SM-20 | 7 |
| 1 | 803-1032-015 | FITTING, BULKHEAD, 1/4 PT | 6 |
| 1 | 002-3979-008 | HOSE, COIL W/COUPLING | 5 |
| 1 | 513-5006-026 | GUN, AIR W/COUPLING | 4 |
| 1 | 108-5004-004 | BHSCS, M 6 X 1.0 P 16 LG | 3 |
| 1 | 110-0046-007 | LOCKWASHER, M6, HELICAL SPRING | 2 |
| 1 | 803-1016-023 | SHAFT, GUN | 1 |

| REV | E.C.N. NO. | REVISION DESCRIPTION | REV BY | DATE | CHK BY | DATE | APPD BY | DATE |
|---|---|---|---|---|---|---|---|---|
| C | 15591 | (3) VM1 SHOWN NOTE ADDED<br>(1) ITEM 9 WAS 506-3001-063, QTY 1, (2) QTY WAS 6.5 FT; | JLW | 5-13 2003 | PFB | 5-15 2003 | PFB | 5-15 2003 |
| B | 15526 | ADDED ITEM 11 | GLH | 11 4 02 | ML | 11 4 02 | . | . |
| A | 15486 | ORIGINAL RELEASE | | | | | | |

SURFACE TREATMENT: NONE

HEAT TREATMENT: NONE

FIRST USED ON: VM-1, VM2

EXCEPT AS NOTED: ALL CORNERS MUST BE AS FOLLOWS
INSIDE: 1.3 X 45° OR 1.3 R MAX
OUTSIDE: 0.8 X 45° OR 1.3 R

EXCEPT AS NOTED: WELDING TOLERANCE MUST BE AS FOLLOWS ±3

EXCEPT AS NOTED: ALL DIMENSIONS IN METRIC TOLERANCE
DECIMAL
.0 ±0.8
.00 ±0.4
.000 ±0.13
.0000 ±0.013
ANGULAR ±0°30'

THIRD ANGLE PROJECTION

HURCO COMPANIES, INC
INDIANAPOLIS, IN. U.S.A.

DESCRIPTION: ASSY, AIR GUN , OPTION

| DRAWN | DATE | CHECKED | DATE | APPROVED | DATE |
|---|---|---|---|---|---|
| GLH | 9/5/2002 | JLW | 9/5/2002 | JLW | 09-26-02 |

| SCALE | SIZE | DRAWING | SHT. | REV. |
|---|---|---|---|---|
| 1:8 | C | 003-0101-008 | 1 OF 1 | C |

UNIT OF MEAS.: PC

# Ass'y., Kit, CE Retrofit, 003-0101-021—Rev. C

| SIZE | DRAWING | SHT. | REV. | PROPRIETARY INFORMATION |
|---|---|---|---|---|
| D | 003-0101-021 | 1 OF 2 | C | INFORMATION CONTAINED HEREIN IS THE PROPERTY OF HURCO MANUFACTURING COMPANY, INC. NO REPRODUCTION OR DISCLOSURE OF THIS INFORMATION SHALL BE MADE BY THE RECIPIENT TO ANY OTHER PERSON OR ORGANIZATION WITHOUT THE PRIOR WRITTEN CONSENT OF HURCO MANUFACTURING COMPANY, INC. |

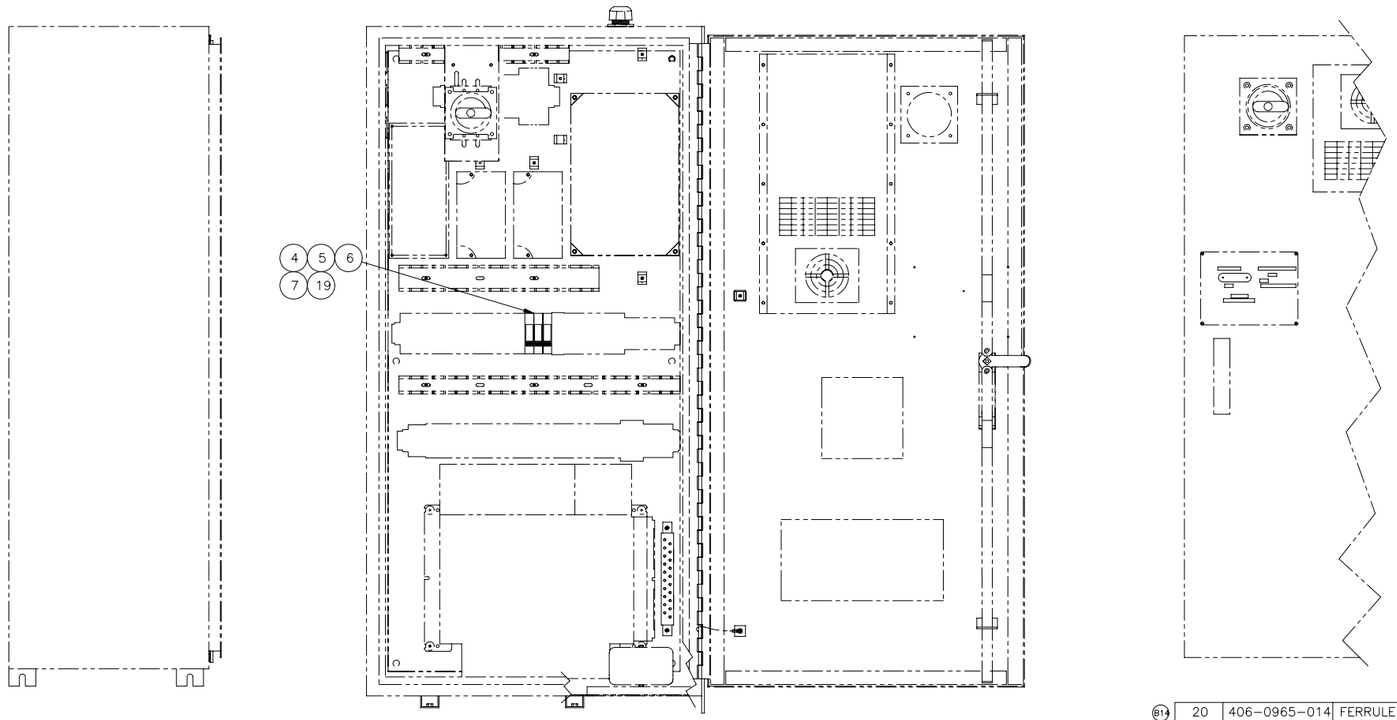


| | ITEM | PART NUMBER | ITEM DESCRIPTION | QTY. |
|---|---|---|---|---|
| | | | PARTS LIST | |
| B14 | 20 | 406-0965-014 | FERRULE, 24AWG | 19 |
| C B13 | 4 | 108-5005-004 | BHSCS, M8 X 1.25 P X 20 LG | 18 |
| C B11 | 4 | 110-0046-008 | LOCKWASHER, M8 HELICAL SPRING | 17 |
| C B10 | 4 | 110-5001-005 | WASHER, M8 FLAT | 16 |
| C B9 | 4 | 117-5011-001 | NUT, HEX M8 X 1.25 P | 15 |
| C B8 | 3 | 101-5021-013 | SHCS, M4 X 0.7 P X 40 LG | 14 |
| C B7 | 3 | 110-0046-005 | LOCKWASHER, M4 HELICAL SPRING | 13 |
| C B6 | 4 | 110-0046-006 | LOCKWASHER, M5 HELICAL SPRING | 12 |
| C B5 | 4 | 110-5001-003 | WASHER, M5 FLAT | 11 |
| C B4 | 4 | 101-5007-003 | SHCS, M5 X 0.8 P X 12 LG | 10 |
| NOT SHOWN → | 1 | 423-4401-733 | HARNESS, DOOR INTERLOCK | 9 |
| | 1 | 003-0107-002 | ASS'Y, ENCLOSURE DOOR SWITCH | 8 |
| B13 | 12FT | 406-2017-002 | WIRE, 24AWG BLACK | 7 |
| | 3 | 417-0001-047 | SUPPRESSOR + INDICATOR DIODE MODULE | 6 |
| | 3 | 403-5001-020 | SOCKET, MINIATURE RELAY, DIN RAIL MOUNT | 5 |
| | 3 | 403-2001-054 | RELAY, MINIATURE | 4 |
| C B3 | 1 | 803-1000-032 | PLATE, MAIN SWITCH | 3 |
| C B2 | 1 | 803-1000-131 | ADAPTOR PANEL, HANDLE, MAIN SWITCH | 2 |
| C B1 | 1 | 404-9081-084 | SWITCH, CONT. DISCONNECT | 1 |

| REV | P.I.N. NO. | REVISION DESCRIPTION | REV BY | DATE | CHK BY | DATE | APPD BY | DATE | DF |
|---|---|---|---|---|---|---|---|---|---|
| C | 15870 | ADDED ITEMS 1–3, 10–18 THAT WERE REMOVED IN REV B. | WCM | 30 JUN 03 | DEO | 30 JUN 03 | | | |
| B | 15636 | 13) WAS QTY 12" BY ERROR; 14) ADD 406-0965-014, QTY:20 10) WAS 110-5001-005 x4; 11) WAS 110-0046-008 x4; 12)WAS 108-5005-004, ERR 7) WAS 110-0046-005 x 3; 8) WAS 101-5021-013 x 3; 9) WAS 117-5011-001, ERR 4) WAS 101-5007-003 x4; 5) WAS 110-5001-003, x4; 6) WAS 110-0046-006 x4 1) WAS 404-9081-079 x 1; 2) WAS 803-1000-131 x 1; 3) WAS 803-1000-032 x 1 | ROD | 30 AUG 03 | | | | | |
| A | 15581 | REL | | | | | | | |

SURFACE TREATMENT

HEAT TREATMENT

FIRST USED ON: VM1 – CE

EXCEPT AS NOTED: ALL CORNERS MUST BE AS FOLLOWS
INSIDE: 1.3 X 45° OR 1.3 R MAX
OUTSIDE: 0.8 X 45° OR 1.3 R

EXCEPT AS NOTED: WELDING TOLERANCE MUST BE AS FOLLOWS ±3

EXCEPT AS NOTED: ALL DIMENSIONS IN METRIC TOLERANCE
DECIMAL .0 ±0.8; .00 ±0.4; .000 ±0.13; .0000 ±0.013
ANGULAR ± 0°30'

THIRD ANGLE PROJECTION

HURCO MANUFACTURING COMPANY, INC.
INDIANAPOLIS, IN U.S.A.

DESCRIPTION: ASS'Y, KIT, CE RETROFIT

| DRAWN | DATE | CHECKED | DATE | APPROVED | DATE |
|---|---|---|---|---|---|
| GLH | 3-19-03 | PFB | 3-19-03 | | |

| SCALE | SIZE | DRAWING | SHT. | REV. |
|---|---|---|---|---|
| N/A | D | 003-0101-021 | 1 OF 2 | C |

UNIT OF MEAS: EA

M

| SIZE | DRAWING | SHT. | OF | REV. |
|---|---|---|---|---|
| D | 003–0101–021 | 2 | 2 | C |

PROPRIETARY INFORMATION
INFORMATION CONTAINED HEREIN IS THE PROPERTY OF HURCO MANUFACTURING COMPANY, INC. NO REPRODUCTION OR DISCLOSURE OF THIS INFORMATION SHALL BE MADE BY THE RECIPIENT TO ANY OTHER PERSON OR ORGANIZATION WITHOUT THE PRIOR WRITTEN CONSENT OF HURCO MANUFACTURING COMPANY, INC.

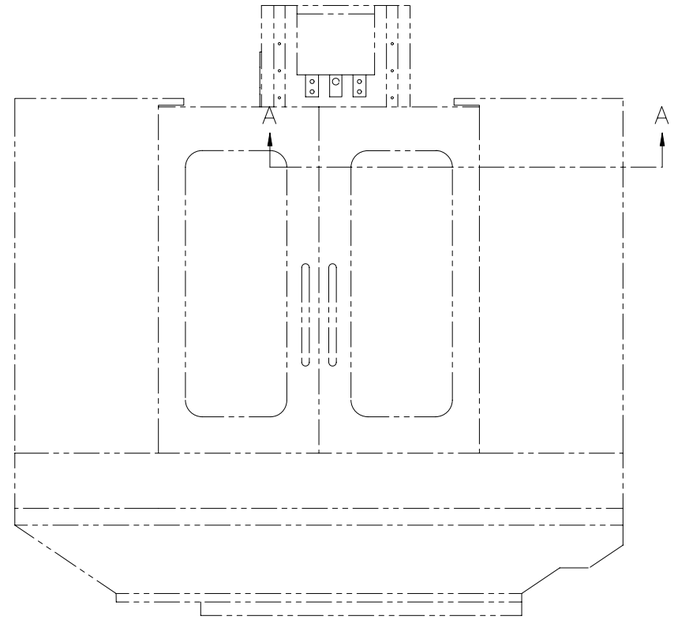


SECTION A–A
SCALE 1 : 2

| | | | |
|---|---|---|---|
| SURFACE TREATMENT ~ | EXCEPT AS NOTED: ALL CORNERS MUST BE AS FOLLOWS INSIDE: 1.3 X 45° OR 1.3 R MAX OUTSIDE: 0.8 X 45° OR 1.3 R | EXCEPT AS NOTED: ALL DIMENSIONS IN METRIC TOLERANCE DECIMAL .0 ±0.8, .00 ±0.4, .000 ±0.13, .0000 ±0.013 ANGULAR ± 0°30' | HURCO MANUFACTURING COMPANY, INC. INDIANAPOLIS, IN U.S.A. |
| HEAT TREATMENT ~ | | | DESCRIPTION: ASS'Y, KIT, CE RETROFIT KIT |
| | | | DRAWN GLH · DATE 3–19–03 · CHECKED PFB · DATE 3–19–03 · APPROVED · DATE |
| FIRST USED ON: VM1 – CE | EXCEPT AS NOTED: WELDING TOLERANCE MUST BE AS FOLLOWS ±3 | THIRD ANGLE PROJECTION | SCALE 1=2 · SIZE D · DRAWING 003–0101–021 · SHT. 2 OF 2 · REV. C |
| | | | UNIT OF MEAS. EA |

M

# Ass'y., Chip Removal, Option, 003-0102-005—Rev. C

| SIZE | DRAWING | SHT. | REV. |
|---|---|---|---|
| D | 003-0102-005 | 1 OF 1 | C |

PROPRIETARY INFORMATION

INFORMATION CONTAINED HEREIN IS THE PROPERTY OF HURCO COMPANIES, INC. NO REPRODUCTION OR DISCLOSURE OF THIS INFORMATION SHALL BE MADE BY THE RECIPIENT TO ANY OTHER PERSON OR ORGANIZATION WITHOUT THE PRIOR WRITTEN CONSENT OF HURCO COMPANIES, INC.

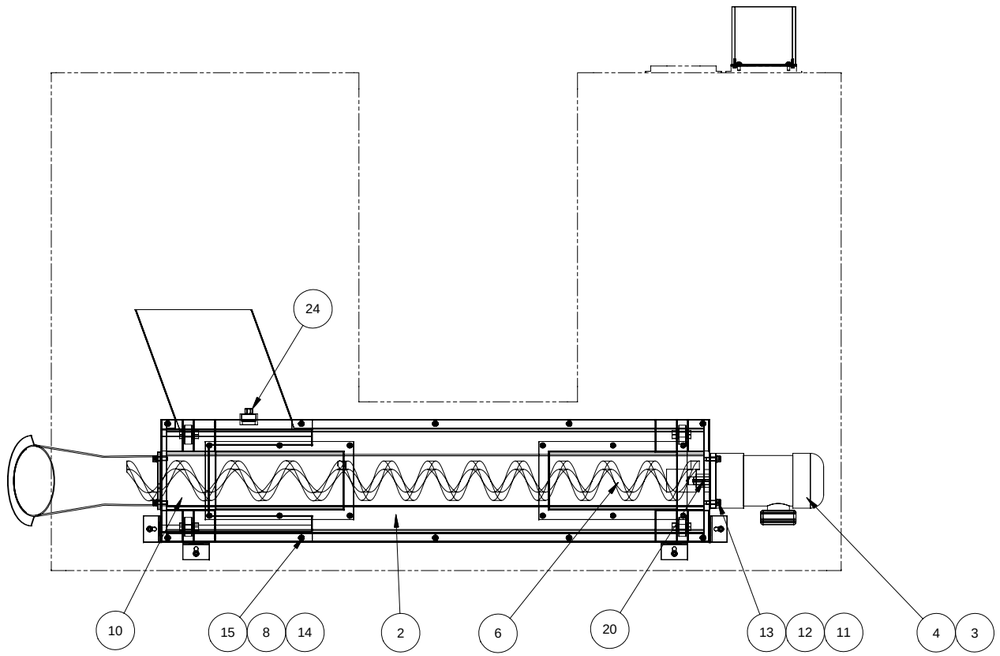


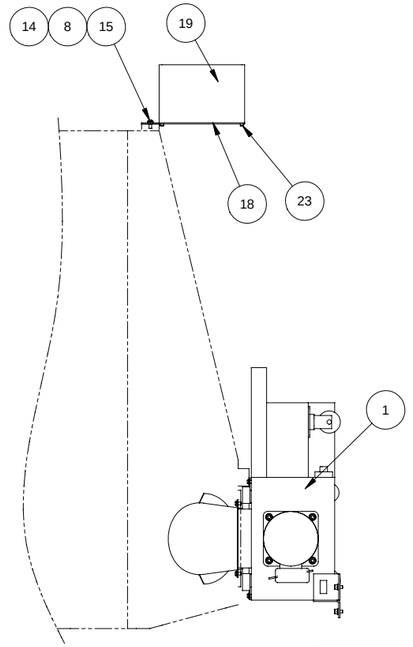


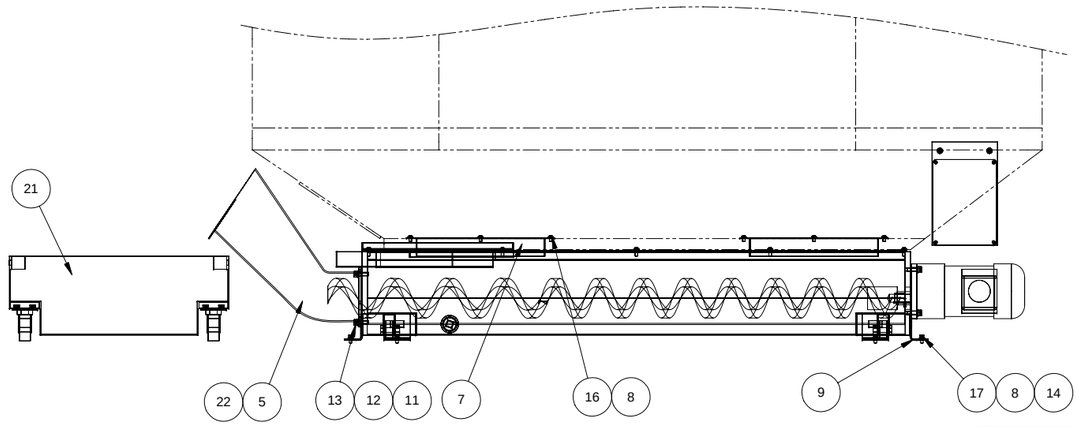


| | QTY. | PART NO. | DESCRIPTION | ITEM |
|---|---|---|---|---|
| C | 1 | 506-6058-001 | PLUG, PIPE 1" PT | 24 |
| C | 4 | 101-5021-006 | SHCS, M 4 X 0.7 P X 16 LG | 23 |
| C | 1 | 803-0121-011 | GASKET, CHIP CHUTE | 22 |
| | 1 | 803-0121-010 | CART, CHIP | 21 |
| | 1 | 103-8001-012 | SSS, M5 X 0.8 P X 10 LG, FLAT PT. | 20 |
| | 1 | 410-2001-054 | ASS'Y, ELECTRICAL AUGER, OPTION | 19 |
| | 1 | 803-0100-010 | PLATE, UTILITY BOX | 18 |
| | 4 | 101-5008-003 | SHCS, M 6 X 1.0 P X 12 LG | 17 |
| | 12 | 108-5004-001 | BHSCS, M 6 X 1.0 P X 10 LG | 16 |
| | 12 | 108-5004-004 | BHSCS, M 6 X 1.0 P 16 LG | 15 |
| | 16 | 110-5001-004 | WASHER, FLAT, M6 | 14 |
| | 8 | 101-5010-007 | SHCS, M8 X 1.25P X 25 LG | 13 |
| | 8 | 110-0046-008 | LOCKWASHER, M8, HELICAL SPRING | 12 |
| | 8 | 110-5001-005 | WASHER, FLAT, M8 | 11 |
| | 1 | 803-0102-022 | COVER, TANK, CHIP | 10 |
| | 4 | 803-1002-039 | BRKT, SKID, SHIPPING | 9 |
| | 28 | 110-0046-007 | LOCKWASHER, M6, HELICAL SPRING | 8 |
| | 2 | 803-0121-006 | HOPPER, PAN, CHIP | 7 |
| | 1 | 803-0121-004 | AUGER, CHIP | 6 |
| | 1 | 803-0121-003 | CHUTE, CHIP | 5 |
| | 1 | 713-0121-001 | MOTOR, CHIP AUGER | 4 |
| | 1 | 803-1068-025 | GASKET, MOTOR, AUGER | 3 |
| | 1 | 803-0121-002 | SCREEN, AUGER | 2 |
| | 1 | 803-0121-001 | TANK, AUGER | 1 |

| REV | E.C.N. NO. | REVISION DESCRIPTION | REV BY | DATE | CHK BY | DATE | APPD BY | DATE |
|---|---|---|---|---|---|---|---|---|
| C | 15526 | ADDED ITEMS 22 - 24 | GLH | 11-4 2002 | ML | 11-4 2002 | | |
| B | 15484 | DRAWING RELEASE | JLW | 09-24 2002 | JLW | 09-24 2002 | JLW | 09-24 2002 |
| A | 15487 | ORIGINAL RELEASE WITH NO DRAWING | | | | | | |

SURFACE TREATMENT: NONE

HEAT TREATMENT: NONE

FIRST USED ON: VM1

EXCEPT AS NOTED: ALL CORNERS MUST BE AS FOLLOWS
INSIDE: 1.3 X 45° OR 1.3 R MAX
OUTSIDE: 0.8 X 45° OR 1.3 R

EXCEPT AS NOTED: WELDING TOLERANCE MUST BE AS FOLLOWS ±°

EXCEPT AS NOTED: ALL DIMENSIONS IN METRIC TOLERANCE
DECIMAL
.0 ±0.8
.00 ±0.4
.000 ±0.13
.0000 ±0.013
ANGULAR ±0°30'

HURCO COMPANIES, INC.
INDIANAPOLIS, IN U.S.A.

DESCRIPTION: ASS'Y CHIP REMOVAL, OPTION

| DRAWN | DATE | CHECKED | DATE | APPROVED | DATE |
|---|---|---|---|---|---|
| Kevin | 07-02-02 | MEL | 07-02-02 | JLW | 09-16-02 |

| SCALE | SIZE | DRAWING | SHT. | REV. |
|---|---|---|---|---|
| 1:6 | D | 003-0102-005 | 1 OF 1 | C |

UNIT OF MEAS.: PC

| SIZE | DRAWING | SHT. | REV. | PROPRIETARY INFORMATION |
|---|---|---|---|---|
| D | 003-0102-009 | 1 OF 1 | A | INFORMATION CONTAINED HEREIN IS THE PROPERTY OF HURCO COMPANIES, INC. NO REPRODUCTION OR DISCLOSURE OF THIS INFORMATION SHALL BE MADE BY THE RECIPIENT TO ANY OTHER PERSON OR ORGANIZATION WITHOUT THE PRIOR WRITTEN CONSENT OF HURCO COMPANIES, INC. |

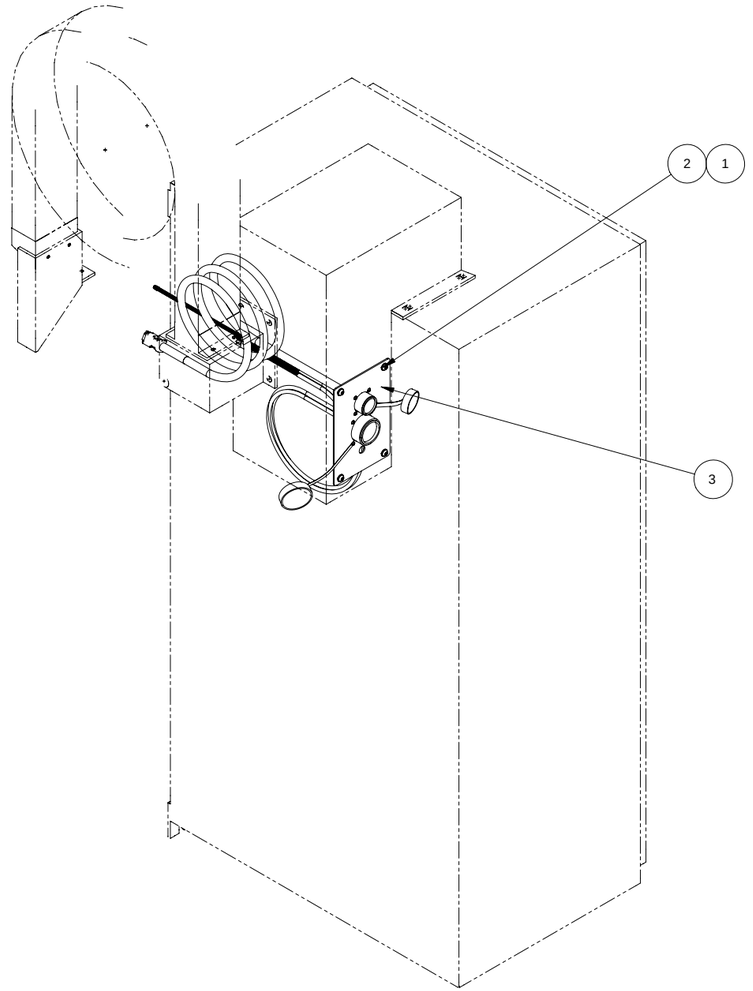


| ITEM | DESCRIPTION | PART NO. | QTY. |
|---|---|---|---|
| 3 | ASS'Y, ROTARY TABLE HARNESSES | 002-4321-046 | 1 |
| 2 | BHSCS, M 6 X 1.0 P X 10 LG | 108-5004-001 | 4 |
| 1 | LOCKWASHER, M6, HELICAL SPRING | 110-0046-007 | 4 |

| REV | E.C.N. NO. | REVISION DESCRIPTION | REV BY | DATE | CHK BY | DATE | APPD BY | DATE |
|---|---|---|---|---|---|---|---|---|
| A | 15636 | Original Release | | | | | | |

SURFACE TREATMENT: NONE

HEAT TREATMENT: NONE

FIRST USED ON: VM1

EXCEPT AS NOTED: ALL CORNERS MUST BE AS FOLLOWS
INSIDE: 1.3 X 45° OR 1.3 R MAX
OUTSIDE: 0.8 X 45° OR 1.3 R

EXCEPT AS NOTED: WELDING TOLERANCE MUST BE AS FOLLOWS ±?

EXCEPT AS NOTED: ALL DIMENSIONS IN METRIC TOLERANCE
DECIMAL: .0 ±0.8; .00 ±0.4; .000 ±0.13; .0000 ±0.013; ANGULAR ±5°30'

HURCO COMPANIES, INC.
INDIANAPOLIS, IN U.S.A.

DESCRIPTION: ASS'Y, 4th AXIS INTERFACE, (EUR)

| DRAWN | DATE | CHECKED | DATE | APPROVED | DATE |
|---|---|---|---|---|---|
| ROD | 1-30-04 | Rod | 1/30/04 | DEO | 3/9/04 |

| SCALE | SIZE | DRAWING | SHT. | REV. |
|---|---|---|---|---|
| 1:5 | D | 003-0102-009 | 1 OF 1 | A |

UNIT OF MEAS.: PC

# Ass'y., 4th Axis Interface, 003-0102-013—Rev. A

| SIZE | DRAWING | SHT. | REV. | PROPRIETARY INFORMATION |
|---|---|---|---|---|
| D | 003-0102-013 | 1 OF 1 | A | INFORMATION CONTAINED HEREIN IS THE PROPERTY OF HURCO COMPANIES, INC. NO REPRODUCTION OR DISCLOSURE OF THIS INFORMATION SHALL BE MADE BY THE RECIPIENT TO ANY OTHER PERSON OR ORGANIZATION WITHOUT THE PRIOR WRITTEN CONSENT OF HURCO COMPANIES, INC. |

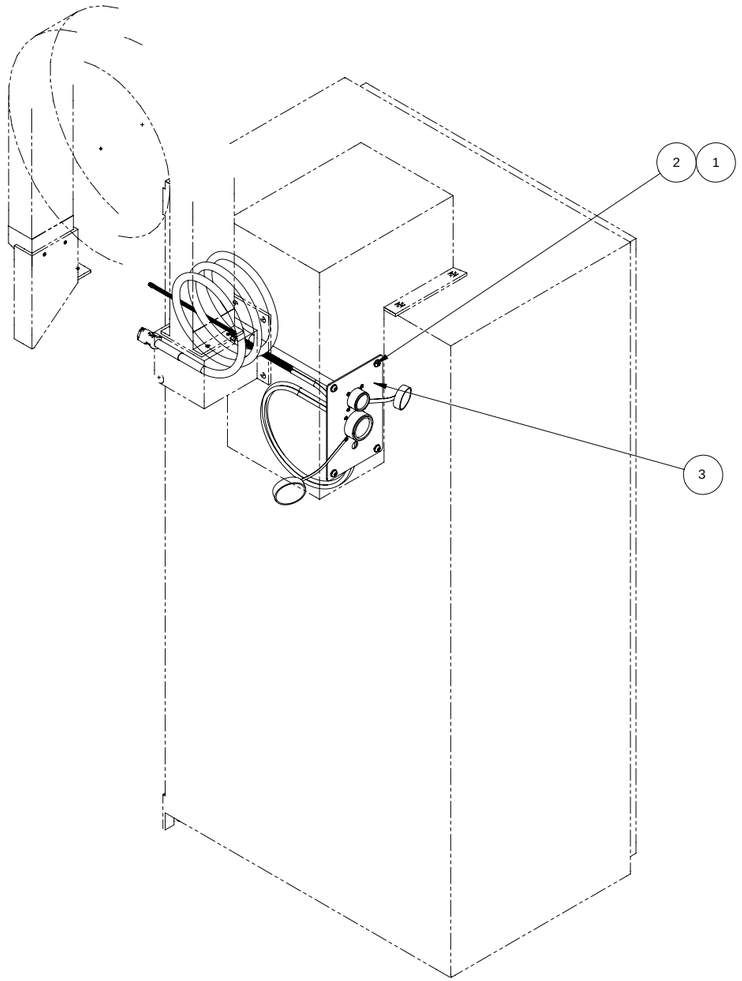


| ITEM | QTY. | PART NO. | DESCRIPTION |
|---|---|---|---|
| 3 | 1 | 002-4321-046 | ASS'Y, ROTARY TABLE HARNESSES |
| 2 | 4 | 108-5004-001 | BHSCS, M 6 X 1.0 P X 10 LG |
| 1 | 4 | 110-0046-007 | LOCKWASHER, M6, HELICAL SPRING |

| REV | E.C.N. NO. | REVISION DESCRIPTION | REV BY | DATE | CHK BY | DATE | APPD BY | DATE |
|---|---|---|---|---|---|---|---|---|
| A | 15826 | ORIGINAL RELEASE | | | | | | |

SURFACE TREATMENT: NONE

HEAT TREATMENT: NONE

FIRST USED ON: VM1

EXCEPT AS NOTED: ALL CORNERS MUST BE AS FOLLOWS
INSIDE: 1.3 X 45° OR 1.3 R MAX
OUTSIDE: 0.8 X 45° OR 1.3 R

EXCEPT AS NOTED: ALL DIMENSIONS IN METRIC TOLERANCE
DECIMAL
.0 ±0.8
.00 ±0.4
.000 ±0.13
.0000 ±0.013
ANGULAR ±0°30'

EXCEPT AS NOTED: WELDING TOLERANCE MUST BE AS FOLLOWS
±3

HURCO COMPANIES, INC.
INDIANAPOLIS, IN U.S.A.

DESCRIPTION: ASS'Y, 4th AXIS INTERFACE

| DRAWN | DATE | CHECKED | DATE | APPROVED | DATE |
|---|---|---|---|---|---|
| SMc | 3-14-05 | PFB | 3-14-05 | PFB | 3-14-05 |

SCALE: 1:5
UNIT OF MEAS.: PC
SIZE: D
DRAWING: 003-0102-013
SHT. 1 OF 1
REV. A

| SIZE | DRAWING | SHT. | REV. |
|---|---|---|---|
| D | 003-0106-006 | 1 OF 1 | A |

PROPRIETARY INFORMATION

INFORMATION CONTAINED HEREIN IS THE PROPERTY OF HURCO COMPANIES, INC. NO REPRODUCTION OR DISCLOSURE OF THIS INFORMATION SHALL BE MADE BY THE RECIPIENT TO ANY OTHER PERSON OR ORGANIZATION WITHOUT THE PRIOR WRITTEN CONSENT OF HURCO COMPANIES, INC.

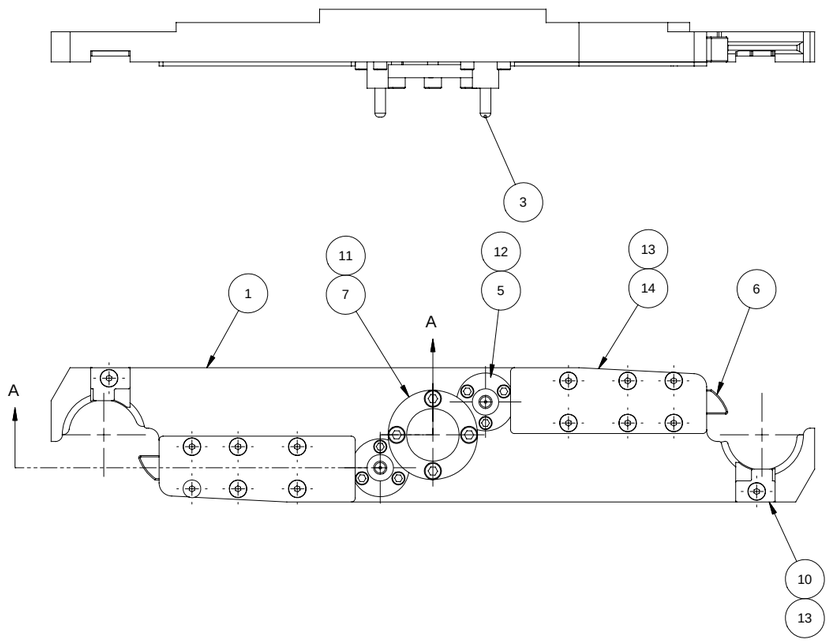


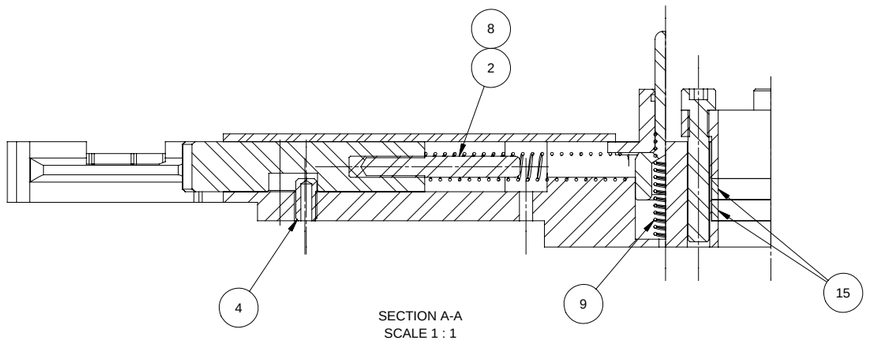


SECTION A-A
SCALE 1 : 1

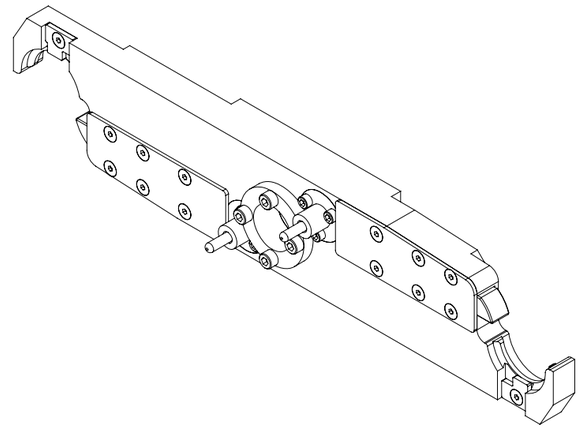

| QTY. | PART NO. | DESCRIPTION | ITEM |
|---|---|---|---|
| 2 | 219-0001-048 | RING, RETAINING | 15 |
| 2 | 803-0108-006 | COVER, PLATE, FINGER | 14 |
| 14 | 102-5004-005 | FHSCS, M 6 X 1.0 P X 16 LG | 13 |
| 6 | 101-5008-004 | SHCS, M 6 X 1.0 P X 16 LG | 12 |
| 4 | 101-5010-012 | SHCS, M 8 X 1.25 P X 50 LG | 11 |
| 2 | 803-0108-005 | KEY | 10 |
| 2 | 803-1012-028 | SPRING, ARM PIN | 9 |
| 2 | 803-1012-027 | SPRING, ARM, FINGER | 8 |
| 1 | 803-1003-078 | COVER | 7 |
| 2 | 803-0108-008 | FINGER | 6 |
| 2 | 803-0108-015 | BUSHING, PIN, ATC | 5 |
| 2 | 803-1022-007 | PIN, 8.0 DIA X 16 LG | 4 |
| 2 | 803-0108-003 | PIN, STOP (BT) | 3 |
| 2 | 803-0108-004 | PIN, SLIDE BLOCK | 2 |
| 1 | 803-0108-025 | ARM, SWING, BT | 1 |

| REV | E.C.N. NO. | REVISION DESCRIPTION | REV BY | DATE | CHK BY | DATE | APPD BY | DATE |
|---|---|---|---|---|---|---|---|---|
| A | 15531 | ORIGINAL RELEASE | | | | | | |

SURFACE TREATMENT: NONE

HEAT TREATMENT: NONE

FIRST USED ON: VM1

EXCEPT AS NOTED: ALL CORNERS MUST BE AS FOLLOWS INSIDE: 1.3 X 45° OR 1.3 R MAX OUTSIDE: 0.8 X 45° OR 1.3 R

EXCEPT AS NOTED: WELDING TOLERANCE MUST BE AS FOLLOWS ±3

EXCEPT AS NOTED: ALL DIMENSIONS IN METRIC TOLERANCE DECIMAL .0 ±0.8 .00 ±0.4 .000 ±0.13 .0000 ±0.013 ANGULAR ±3°/30'

HURCO COMPANIES, INC.
INDIANAPOLIS, IN U.S.A.

DESCRIPTION: ASS'Y, BT SWING ARM

| DRAWN | DATE | CHECKED | DATE | APPROVED | DATE |
|---|---|---|---|---|---|
| GLH | 11/11/2002 | ML | 11/11/2002 | | |

| SCALE | SIZE | DRAWING | SHT. | REV. |
|---|---|---|---|---|
| 1:2 | D | 003-0106-006 | 1 OF 1 | A |

UNIT OF MEAS. PC

# Ass'y., Flood Coolant, Option, 003-0108-001—Rev. E

| SIZE | DRAWING | SHT. | REV. |
|---|---|---|---|
| D | 003-0108-001 | 1 OF 2 | E |

PROPRIETARY INFORMATION

INFORMATION CONTAINED HEREIN IS THE PROPERTY OF HURCO COMPANIES, INC. NO REPRODUCTION OR DISCLOSURE OF THIS INFORMATION SHALL BE MADE BY THE RECIPIENT TO ANY OTHER PERSON OR ORGANIZATION WITHOUT THE PRIOR WRITTEN CONSENT OF HURCO COMPANIES, INC.

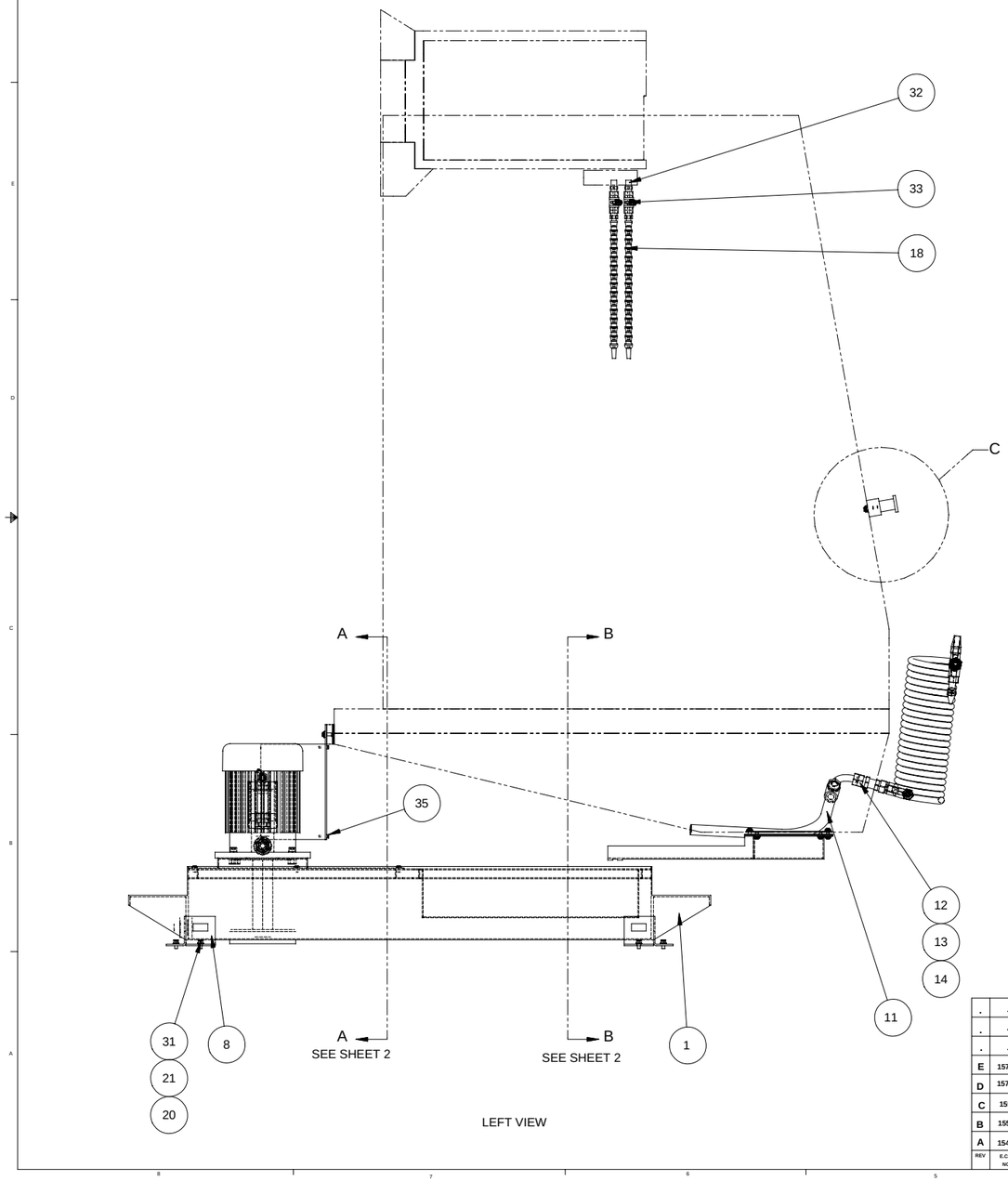


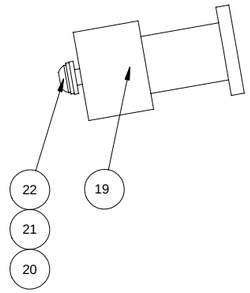


DETAIL C
SCALE 1=1

| | ITEM | QTY. | PART NO. | DESCRIPTION |
|---|---|---|---|---|
| D4 | 36 | 1 | 803-0106-023 | GASKET, TROUGH COOLANT |
| C | 35 | 4 | 101-5021-006 | SHCS, M 4 X 0.7 P X 16 LG |
| C | 34 | 1 | 506-6058-001 | PLUG, PIPE 1" PT |
| | 33 | 2 | 502-0129-016 | VALVE, SHUT-OFF |
| | 32 | 2 | 506-6050-003 | NIPPLE, HEX, 1/4" PT M |
| | 31 | 4 | 101-5008-003 | SHCS, M 6 X 1.0 P X 12 LG |
| E7 | 30 | 1 | 506-6057-001 | VALVE, CHECK, 3/4¨ PT F |
| | 29 | 20 | 108-5004-001 | BHSCS, M 6 X 1.0 P X 10 LG |
| E6 | 28 | 4 | 101-5010-007 | SHCS, M8 X 1.25P X 25 LG |
| | 27 | 4 | 110-0046-008 | LOCKWASHER, M8, HELICAL SPRING |
| | 26 | 1 | 803-0100-010 | PLATE, UTILITY BOX |
| | 25 | 1 | 410-2001-055 | ASS'Y, ELECTRICAL FLOOD, OPTION |
| | 24 | 1 | 803-0121-009 | SCREEN, PAN, CHIP |
| | 23 | 1 | 803-0121-008 | TROUGH, COOLANT |
| | 22 | 3 | 108-5004-004 | BHSCS, M 6 X 1.0 P 16 LG |
| | 21 | 27 | 110-0046-007 | LOCKWASHER, M6, HELICAL SPRING |
| | 20 | 19 | 110-5001-004 | WASHER, FLAT, M6 |
| | 19 | 1 | 803-1016-023 | SHAFT, GUN |
| | 18 | 2 | 003-0109-002 | ASS'Y NOZZLE, WASHDOWN 1/4"PT ROUND |
| | 17 | 1 | 513-5006-023 | NOZZLE, SPRAY(LS-QGF300) |
| D3 | 16 | 1 | 506-3001-071 | CONNECTOR, STRAIGHT, 1/4" PT X 1/2" H |
| D2 | 15 | 1 | 002-3979-010 | PIPE, 1/2" X 6000 mm |
| | 14 | 2 | 506-3003-014 | CONNECTOR, SLEEVE 1/4"PT x 3/4"-16UNF |
| D1 | 13 | 1 | 506-3009-068 | CONNECTOR, 90 DEG ELBOW, 1/4" PT X 1/2" H |
| | 12 | 1 | 506-3001-067 | CONNECTOR, CLAMP-WALL 3/4"-16UNF |
| | 11 | 1 | 507-1206-134 | HOSE, 3500 mm, WASHDOWN |
| E5 | 10 | 1 | 506-1036-003 | CONNECTOR, 3/4"PT x 3/4"-16 UNF |
| | 9 | 1 | 602-0002-022 | CLAMP, HOSE, 15/16" - 1 1/2" |
| | 8 | 4 | 803-1002-039 | BRKT, SKID, SHIPPING |
| E4 B | 7 | 1 | 509-0007-044 | PUMP, COOLANT YC-2175 |
| E3 | 6 | 1 | 506-6051-127 | ELBOW, 3/4" PT M x 1/2" I.D. HOSE |
| E2 | 5 | 2 | 506-6050-001 | NIPPLE, 3/4" PT M HEX |
| E1 | 4 | 1 | 506-6053-001 | TEE, PIPE 3/4"PT F |
| | 3 | 1 | 803-0100-008 | PLATE, COOLANT PUMP MOUNTING |
| | 2 | 1 | 803-0121-007 | SCREEN, TANK COOLANT |
| | 1 | 1 | 803-0115-001 | TANK, COOLANT |

| REV | E.C.N. NO. | REVISION DESCRIPTION | REV BY | DATE | CHK BY | DATE | APPD BY | DATE |
|---|---|---|---|---|---|---|---|---|
| E | 15788 | (5) WAS 506-6052-023 (6) WAS 101-5010-005 (7) WAS 506-6057-020 (1) WAS 506-6053-011 (2) WAS 506-6050-049 (3) WAS 506-6051-057 (4) WAS 503-0001-031 | KevinS | 03-10 2004 | MLE | 03-10 2004 | . | . |
| D | 15709 | (1) WAS 506-3009-060 (2) WAS 002-3979-007 (3) WAS 506-3001-066 (4) ADDED ITEM 36 | KevinS | 09-16 2003 | MLE | 09-16 2003 | JLW | 02-20 2004 |
| C | 15526 | ADDED ITEMS 34 & 35 | GLH | 11-1 2002 | PFB | 11-1 2002 | . | . |
| B | 15517 | ITEM 7 WAS 503-0001-021 | JLW | 10-14 2002 | PFB | 10-14 2002 | JLW | 10-14 2002 |
| A | 15484 | ORIGINAL RELEASE | | | | | | |

SURFACE TREATMENT: NONE

HEAT TREATMENT: NONE

FIRST USED ON: VM1

EXCEPT AS NOTED: ALL CORNERS MUST BE AS FOLLOWS
INSIDE: 1.3 X 45° OR 1.3 R MAX
OUTSIDE: 0.8 X 45° OR 1.3 R

EXCEPT AS NOTED: WELDING TOLERANCE MUST BE AS FOLLOWS ±3

EXCEPT AS NOTED: ALL DIMENSIONS IN METRIC TOLERANCE
DECIMAL .0 ±0.8, .00 ±0.4, .000 ±0.13, .0000 ±0.013
ANGULAR ±1°30'

HURCO COMPANIES, INC.
INDIANAPOLIS, IN U.S.A.

DESCRIPTION: ASS'Y, FLOOD COOLANT, OPTION

| DRAWN | DATE | CHECKED | DATE | APPROVED | DATE |
|---|---|---|---|---|---|
| KEN | 07-02-02 | MLE | 07-05-02 | JLW | 09-19-02 |

SCALE 1:5 | UNIT OF MEAS. PC | SIZE D | DRAWING 003-0108-001 | SHT. 1 OF 2 | REV. E

| SIZE | DRAWING | SHT. | REV. |
|---|---|---|---|
| D | 003-0108-001 | 2 OF 2 | E |

**PROPRIETARY INFORMATION**

INFORMATION CONTAINED HEREIN IS THE PROPERTY OF HURCO COMPANIES, INC. NO REPRODUCTION OR DISCLOSURE OF THIS INFORMATION SHALL BE MADE BY THE RECIPIENT TO ANY OTHER PERSON OR ORGANIZATION WITHOUT THE PRIOR WRITTEN CONSENT OF HURCO COMPANIES, INC.

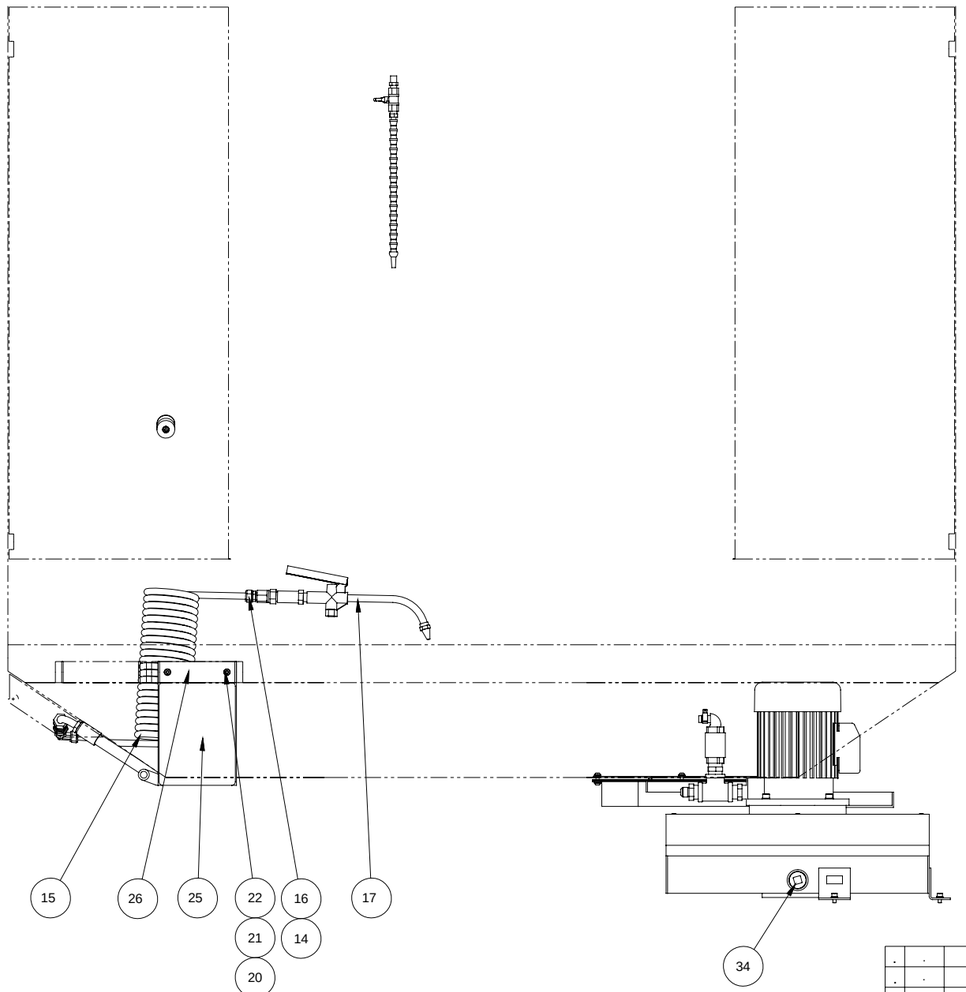


REAR VIEW

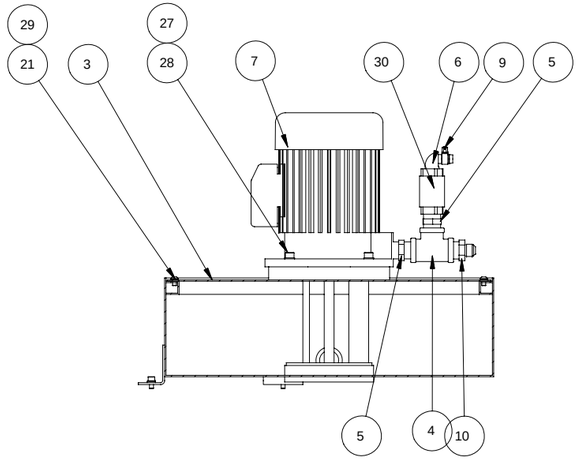


SECTION A-A
SCALE 1=4
FROM SHEET 1

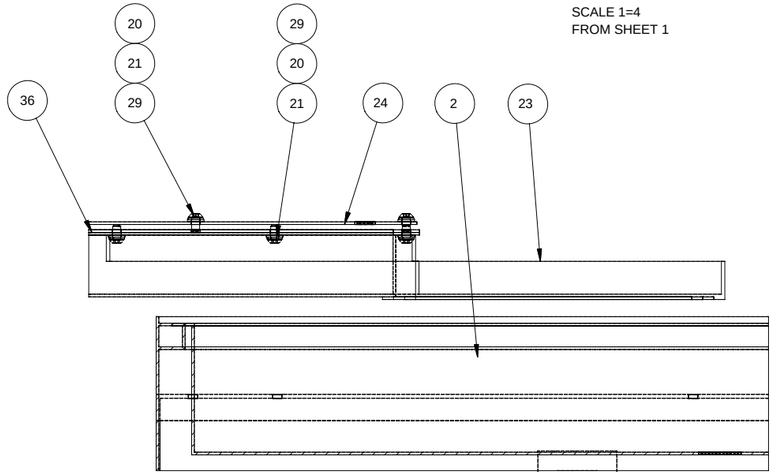


SECTION B-B
SCALE 1=2
FROM SHEET 1

| QTY. | PART NUMBER | ITEM DESCRIPTION | ITEM |
|---|---|---|---|

PARTS LIST

| REV | E.C.N. NO. | REVISION DESCRIPTION | REV BY | DATE | CHK BY | DATE | APPD BY | DATE |
|---|---|---|---|---|---|---|---|---|
| A | 15484 | ORIGINAL RELEASE | | | | | | |

SURFACE TREATMENT: NONE

HEAT TREATMENT: NONE

FIRST USED ON: VM1

EXCEPT AS NOTED: ALL CORNERS MUST BE AS FOLLOWS
INSIDE: 1.3 X 45° OR 1.3 R MAX
OUTSIDE: 0.8 X 45° OR 1.3 R

EXCEPT AS NOTED: ALL DIMENSIONS IN METRIC TOLERANCE
DECIMAL: .0 ±0.8, .00 ±0.4, .000 ±0.13, .0000 ±0.013, ANGULAR ±0°30'

EXCEPT AS NOTED: WELDING TOLERANCE MUST BE AS FOLLOWS
±1

HURCO COMPANIES, INC.
INDIANAPOLIS, IN U.S.A.

DESCRIPTION: ASS'Y, FLOOD COOLANT, OPTION

| DRAWN | DATE | CHECKED | DATE | APPROVED | DATE |
|---|---|---|---|---|---|
| KEN | 07-02-02 | MLE | 07-05-02 | JLW | 09-19-02 |

| SCALE | SIZE | DRAWING | SHT. | REV. |
|---|---|---|---|---|
| 1:5 | D | 003-0108-001 | 2 OF 2 | E |

UNIT OF MEAS.: PC

# Ass'y., 10K Spindle, Pulleys & Encoder, 003-0108-002—Rev. C

| SIZE | DRAWING | SHT. | REV. |
|---|---|---|---|
| D | 003-0108-002 | 1 OF 1 | C |

PROPRIETARY INFORMATION

INFORMATION CONTAINED HEREIN IS THE PROPERTY OF HURCO COMPANIES, INC. NO REPRODUCTION OR DISCLOSURE OF THIS INFORMATION SHALL BE MADE BY THE RECIPIENT TO ANY OTHER PERSON OR ORGANIZATION WITHOUT THE PRIOR WRITTEN CONSENT OF HURCO COMPANIES, INC.

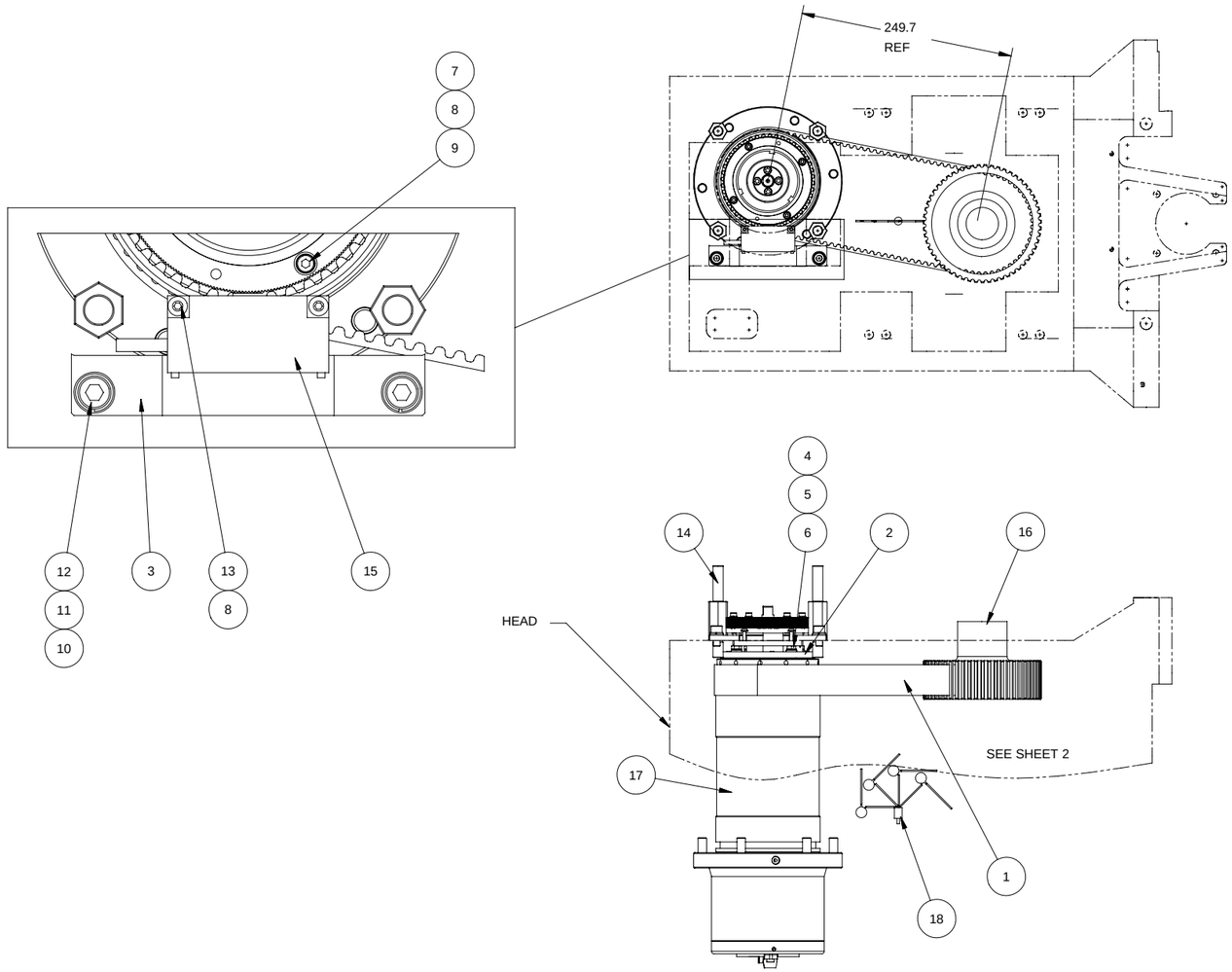


NOTE:
ITEM 18 IS NOT DELINEATED. REFERENCE 003-2022-011, PAGE 8 FOR CONNECTIONS.

| Ⓒ REF. | QTY. | PART NO. | DESCRIPTION | ITEM |
|---|---|---|---|---|
| | 1 | 407-0001-111 | MC5 INVERTER FILTER | 18 |
| | 1 | 003-1015-027 | ASS'Y, SPINDLE (10K) | 17 |
| | 1 | 803-0107-003 | PULLEY, SPINDLE MOTOR, 55T | 16 |
| | 1 | 416-0248-069 | ENCODER, MAGNETIC | 15 |
| | 4 | 803-0106-014 | STANDOFF, CYLINDER | 14 |
| | 2 | 108-5002-005 | BHSCS, M 4 X 0.7 P X 16 LG | 13 |
| | 2 | 101-5010-003 | SHCS, M 8 X 1.25 P X 16 LG | 12 |
| | 2 | 110-0046-008 | LOCKWASHER, M8, HELICAL SPRING | 11 |
| | 2 | 110-5001-005 | WASHER, FLAT, M8 | 10 |
| | 4 | 101-5021-008 | SHCS, M 4 X 0.7 P X 20 LG | 9 |
| | 6 | 110-0046-005 | LOCKWASHER, M4, HELICAL SPRING | 8 |
| | 4 | 110-5001-002 | WASHER, FLAT, M4 | 7 |
| | 4 | 105-5046-007 | HHCS, M 6 X 1.0 P X 20 LG | 6 |
| | 4 | 110-0046-007 | LOCKWASHER, M6, HELICAL SPRING | 5 |
| | 4 | 110-5001-004 | WASHER, FLAT, M6 | 4 |
| | 1 | 803-0101-022 | BRACKET, ENCODER SENSOR | 3 |
| | 1 | 803-0110-005 | BRACKET, ENCODER GEAR | 2 |
| | 1 | 204-0007-012 | BELT, POLYCHAIN, GT | 1 |

| REV | E.C.N. NO. | REVISION DESCRIPTION | REV BY | DATE | CHK BY | DATE | APPD BY | DATE |
|---|---|---|---|---|---|---|---|---|
| C | 15649 | ADDED ITEM 18 | GLH | 09-18-2003 | PFB | 09-18-2003 | | |
| B | 15517 | DRAWING RELEASED | KEV | 09-16-2002 | MLE | 09-16-2002 | JLW | 10-07-2002 |
| A | 15487 | REL WITH NO DRAWING | | | | | | |

SURFACE TREATMENT: NONE
HEAT TREATMENT: NONE
FIRST USED ON: VM1

EXCEPT AS NOTED: ALL CORNERS MUST BE AS FOLLOWS
INSIDE: 1.3 X 45° OR 1.3 R MAX
OUTSIDE: 0.8 X 45° OR 1.3 R

EXCEPT AS NOTED: ALL DIMENSIONS IN METRIC TOLERANCE
DECIMAL: .0 ±0.8, .00 ±0.4, .000 ±0.13, .0000 ±0.013, ANGULAR ±0°30'

EXCEPT AS NOTED: WELDING TOLERANCE MUST BE AS FOLLOWS
±3

HURCO COMPANIES, INC.
INDIANAPOLIS, IN U.S.A.

DESCRIPTION: ASS'Y, 10K SPINDLE, PULLEYS & ENCODER

| DRAWN | DATE | CHECKED | DATE | APPROVED | DATE |
|---|---|---|---|---|---|
| Kevin | 09-16-02 | MLE | 09-16-02 | JLW | 10-07-02 |

SCALE: 1:3
UNIT OF MEAS.: PC
SIZE: D
DRAWING: 003-0108-002
SHT. 1 OF 1
REV. C

| SIZE | DRAWING | SHT. | REV. |
|---|---|---|---|
| D | 003-0108-004 | 1 OF 1 | B |

PROPRIETARY INFORMATION

INFORMATION CONTAINED HEREIN IS THE PROPERTY OF HURCO COMPANIES, INC. NO REPRODUCTION OR DISCLOSURE OF THIS INFORMATION SHALL BE MADE BY THE RECIPIENT TO ANY OTHER PERSON OR ORGANIZATION WITHOUT THE PRIOR WRITTEN CONSENT OF HURCO COMPANIES, INC.

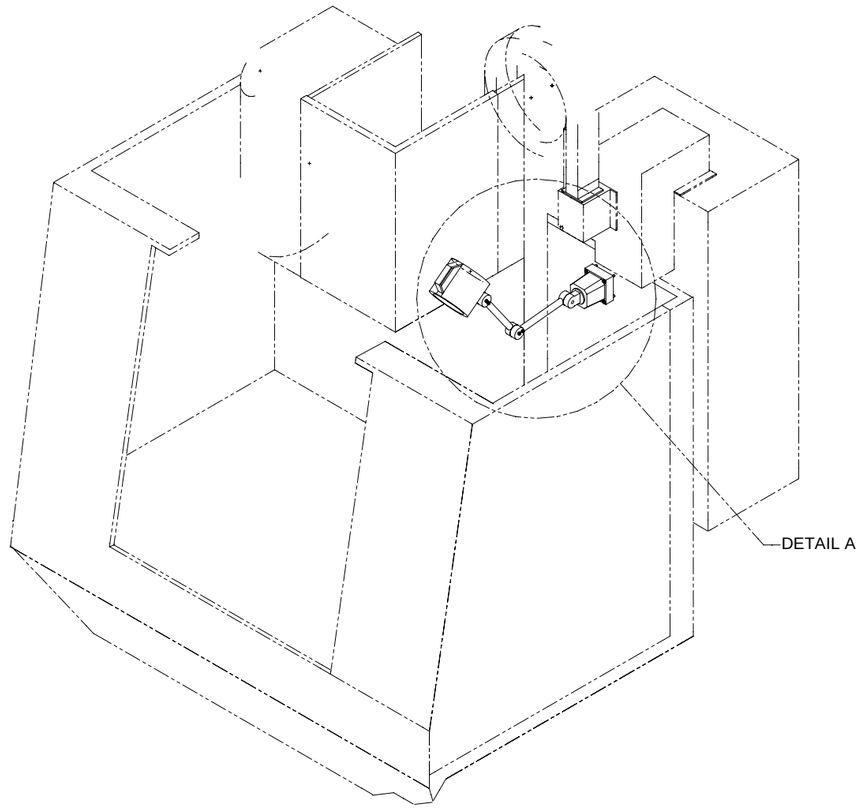


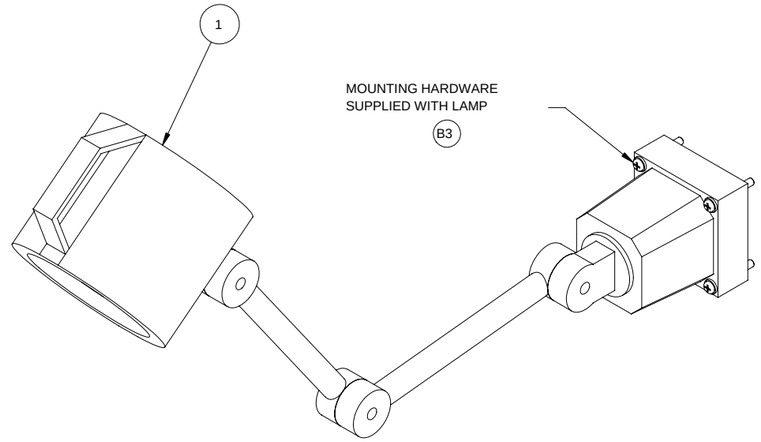


DETAIL A
SCALE 1:2

| ITEM | DESCRIPTION | PART NO. | QTY. |
|---|---|---|---|
| 3 | SHCS, M 6 X 1.0 P X 45 LG | 101-5008-012 | 0 |
| 2 | LOCKWASHER, M6, HELICAL SPRING | 110-0046-007 | 0 |
| 1 | WORK LIGHT, HALOGEN | 411-7001-012 | 1 |

B2 B2

| REV | E.C.N. NO. | REVISION DESCRIPTION | REV BY | DATE | CHK BY | DATE | APPD BY | DATE |
|---|---|---|---|---|---|---|---|---|
| B | 15526 | (1)WAS 110-0046-007 QTY 4, (2)WAS 101-5008-012 QTY 4, (3)ADDED NOTE | GLH | 11 4 02 | ML | 11 4 02 | | |
| A | 15485 | ORIGINAL RELEASE | | | | | | |

SURFACE TREATMENT: NONE

HEAT TREATMENT: NONE

FIRST USED ON: VM1

EXCEPT AS NOTED: ALL CORNERS MUST BE AS FOLLOWS
INSIDE: 1.3 X 45° OR 1.3 R MAX
OUTSIDE: 0.8 X 45° OR 1.3 R

EXCEPT AS NOTED: ALL DIMENSIONS IN METRIC TOLERANCE
DECIMAL: .0 ±0.8; .00 ±0.4; .000 ±0.13; .0000 ±0.013; ANGULAR ±1°30'

EXCEPT AS NOTED: WELDING TOLERANCE MUST BE AS FOLLOWS ±3

HURCO COMPANIES, INC.
INDIANAPOLIS, IN U.S.A.

DESCRIPTION: ASS'Y, WORKLAMP, OPTION

| DRAWN | DATE | CHECKED | DATE | APPROVED | DATE |
|---|---|---|---|---|---|
| ROD | 7-04-02 | MLE | 7-08-02 | JLW | 09-23-02 |

SCALE 1:8 | UNIT OF MEAS. PC | SIZE D | DRAWING 003-0108-004 | SHT. 1 OF 1 | REV. B

# Ass'y., Left Worklight, Option, VM2, 003-0208-006—Rev. A

| SIZE | DRAWING | SHT. | REV. | PROPRIETARY INFORMATION |
|---|---|---|---|---|
| D | 003-0208-006 | 1 OF 1 | A | INFORMATION CONTAINED HEREIN IS THE PROPERTY OF HURCO COMPANIES, INC. NO REPRODUCTION OR DISCLOSURE OF THIS INFORMATION SHALL BE MADE BY THE RECIPIENT TO ANY OTHER PERSON OR ORGANIZATION WITHOUT THE PRIOR WRITTEN CONSENT OF HURCO COMPANIES, INC. |

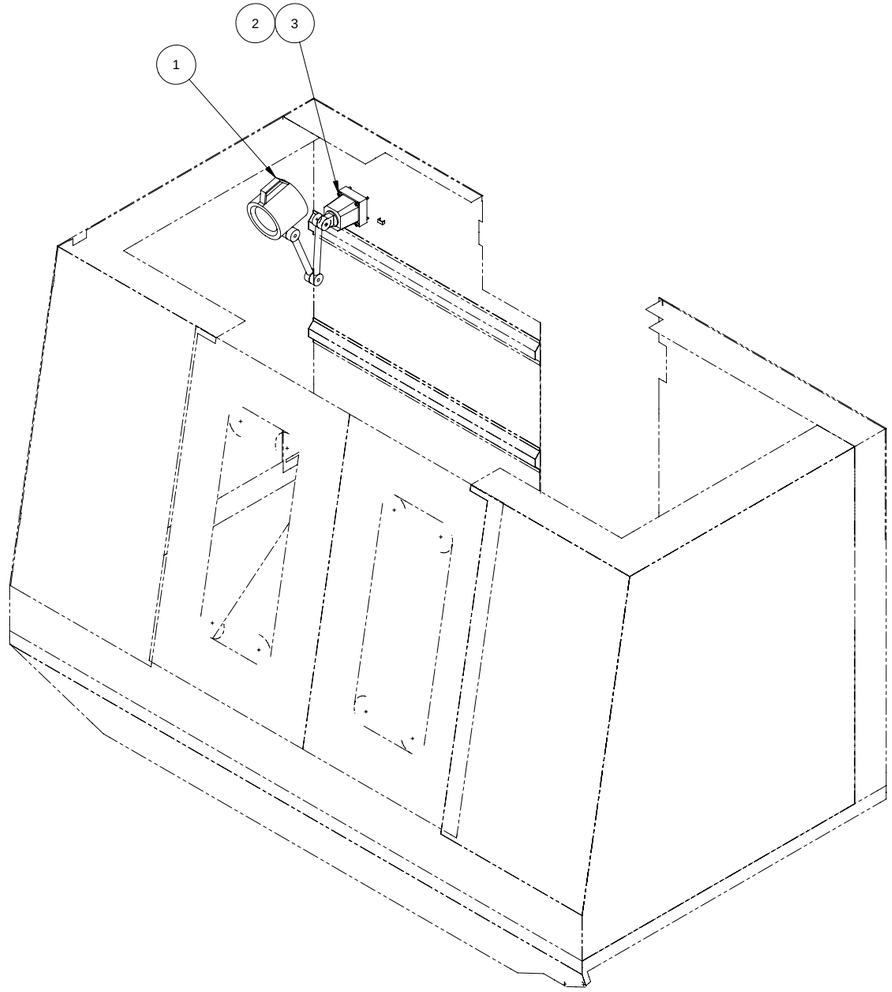


| QTY. | PART NO. | DESCRIPTION | ITEM |
|---|---|---|---|
| 4 | 101-5008-012 | SHCS, M 6 X 1.0 P X 45 LG | 3 |
| 4 | 110-0046-007 | LOCKWASHER, M6, HELICAL SPRING | 2 |
| 1 | 411-7001-013 | WORKLIGHT JW-55RTM, 110V, W/155" CABLE | 1 |

| REV | E.C.N. NO. | REVISION DESCRIPTION | REV BY | DATE | CHK BY | DATE | APPD BY | DATE |
|---|---|---|---|---|---|---|---|---|
| A | 15564 | ORIGINAL RELEASE | | | | | | |

SURFACE TREATMENT: NONE

HEAT TREATMENT: NONE

FIRST USED ON: VM2

EXCEPT AS NOTED: ALL CORNERS MUST BE AS FOLLOWS
INSIDE: 1.3 X 45° OR 1.3 R MAX
OUTSIDE: 0.8 X 45° OR 1.3 R

EXCEPT AS NOTED: WELDING TOLERANCE MUST BE AS FOLLOWS ±3

EXCEPT AS NOTED: ALL DIMENSIONS IN METRIC TOLERANCE
DECIMAL
.0 ±0.8
.00 ±0.4
.000 ±0.13
.0000 ±0.013
ANGULAR ±0°30'

HURCO COMPANIES, INC.
INDIANAPOLIS, IN U.S.A.

DESCRIPTION: ASS'Y, LEFT WORKLIGHT, OPTION, VM2

| DRAWN | DATE | CHECKED | DATE | APPROVED | DATE |
|---|---|---|---|---|---|
| ROD | 03-10-03 | MLE | 03-11-03 | JLW | 03-31-03 |

SCALE: 1:8
UNIT OF MEAS.: PC
SIZE: D
DRAWING: 003-0208-006
SHT. 1 OF 1
REV. A

| SIZE | DRAWING | SHT. | REV. |
|---|---|---|---|
| D | 007-0020-007 | 1 OF 1 | B |

PROPRIETARY INFORMATION
INFORMATION CONTAINED HEREIN IS THE PROPERTY OF HURCO COMPANIES, INC. NO REPRODUCTION OR DISCLOSURE OF THIS INFORMATION SHALL BE MADE BY THE RECIPIENT TO ANY OTHER PERSON OR ORGANIZATION WITHOUT THE PRIOR WRITTEN CONSENT OF HURCO COMPANIES, INC.

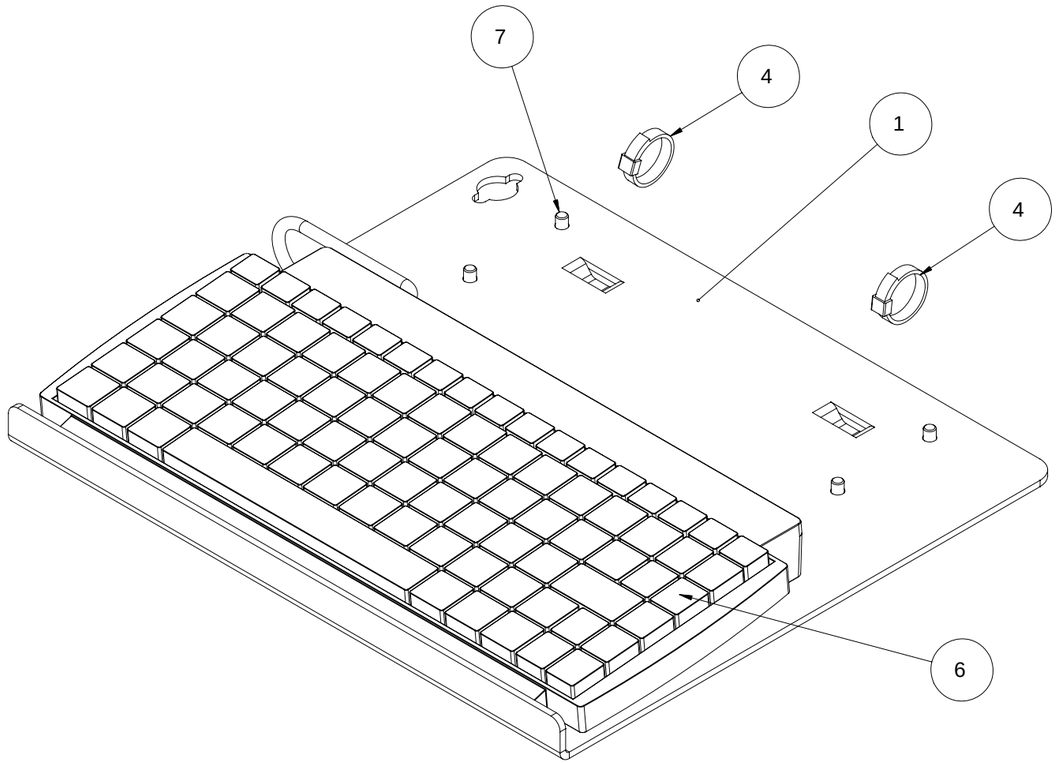


NOTES:

1. ITEMS 2, 3, 5, 8 & 9 ARE NOT SHOWN.
2. INSTALL COVER, (ITEM 3), OVER KEYBOARD, (ITEM 6), AND ATTACH WITH SELF-ADHESIVE TABS.
3. CUT VELCRO, (ITEM 2), INTO 2 - 1" PIECES, 2 - 2" PIECES, & 1 - 3" PIECE AND ATTACH UNDER KEYBOARD, (ITEM 6), & ON TRAY, (ITEM 1).
4. ATTACH KEYBOARD, (ITEM 6), TO TRAY, (ITEM 1), AND LEAVE 4" OF CABLE FREE ON LEFT SIDE OF TRAY. WRAP AND ATTACH REMAINING CABLE UNDER TRAY USING CABLE TIES, (ITEM 4).

| | QTY. | PART NO. | DESCRIPTION | ITEM |
|---|---|---|---|---|
| B | 1 | 704-2001-006 | VIDEO, MAX KEYBOARD OPTION INSTALL | 9 |
| B | 1 | 757-4002-322 | PROCEDURE, MAX KEYBOARD OPTION INSTALL | 8 |
| | 5 | 108-5003-002 | BHSCS, M 5 X 0.8 P X 8 LG | 7 |
| | 1 | 419-1001-005 | KEYBOARD, MINI, PS/2 | 6 |
| | 1 | 614-0002-130 | BOX, 12" X 14" X 4", CARDBOARD | 5 |
| | 2 | 406-5001-006 | TIE WRAP, MEDIUM | 4 |
| | 1 | 419-1001-006 | COVER, PROTECTIVE, VINYL KEYBOARD | 3 |
| | 9 | 130-0001-001 | VELCRO, WOVEN NYLON HOOK & LOOP | 2 |
| | 1 | 807-0011-003 | TRAY, KEYBOARD, OPTIONAL | 1 |

| REV | E.C.N. NO. | REVISION DESCRIPTION | REV BY | DATE | CHK BY | DATE | APPD BY | DATE |
|---|---|---|---|---|---|---|---|---|
| B | 15505 | ITEMS 8 & 9 ADDED | JLW | 9-25-2002 | FWG | 9-25-2002 | PFB | 9-25-2002 |
| A | 15443 | ORIGINAL RELEASE | | | | | | |

SURFACE TREATMENT: NONE
HEAT TREATMENT: NONE
FIRST USED ON: MAX

EXCEPT AS NOTED: ALL CORNERS MUST BE AS FOLLOWS
INSIDE: 1.3 X 45° OR 1.3 R MAX
OUTSIDE: 0.8 X 45° OR 1.3 R

EXCEPT AS NOTED: ALL DIMENSIONS IN METRIC TOLERANCE
DECIMAL: .X ±0.8, .XX ±0.4, .XXX ±0.13, .XXXX ±0.013
ANGULAR ±1°30'

EXCEPT AS NOTED: WELDING TOLERANCE MUST BE AS FOLLOWS ±3

HURCO
HURCO COMPANIES, INC.
INDIANAPOLIS, IN U.S.A.

DESCRIPTION: KIT, OPTION, KEYBOARD, MAX

| DRAWN | DATE | CHECKED | DATE | APPROVED | DATE |
|---|---|---|---|---|---|
| JLW | 12-4-01 | FWG | 12-6-01 | - | - |

SCALE: 1:1
UNIT OF MEAS.: EA
SIZE: D
DRAWING: 007-0020-007
SHT. 1 OF 1
REV. B

# Kit, Option, Remote Jog, Max, 007-0020-008—Rev. C

| SIZE | DRAWING | SHT | REV. |
|---|---|---|---|
| B | 007-0020-008 | 1 OF 1 | C |

PROPRIETARY INFORMATION
INFORMATION CONTAINED HEREIN IS THE PROPERTY OF HURCO COMPANIES, INC. NO REPRODUCTION OR DISCLOSURE OF THIS INFORMATION SHALL BE MADE BY THE RECIPIENT TO ANY OTHER PERSON OR ORGANIZATION WITHOUT THE PRIOR WRITTEN CONSENT OF HURCO COMPANIES, INC.

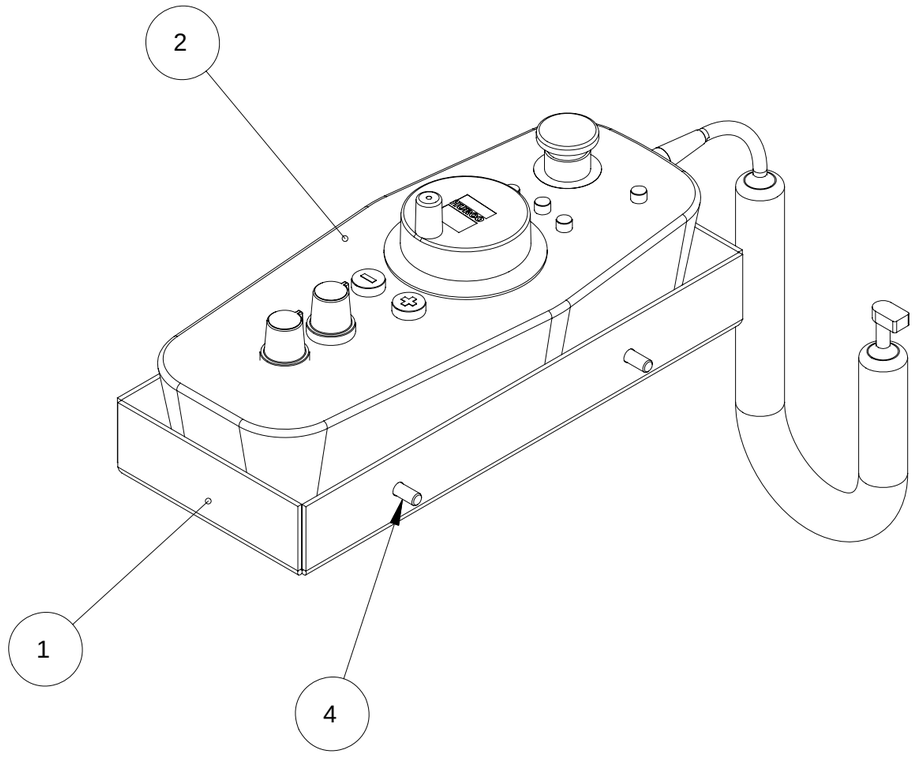


NOTES:

1. ITEMS 3, 5 & 6 NOT SHOWN
2. LABEL ITEM 3, CONTAINER WITH PART NUMBER & REVISION LETTER.
3. PLACE ITEM 4 IN PLASTIC BAG AND PLACE IN ITEM 3 FOR SHIPMENT.

| | QTY. | PART NO. | DESCRIPTION | ITEM |
|---|---|---|---|---|
| C | 1 | 704-2001-007 | VIDEO, MAX REMOTE JOG OPTION INSTALL | 6 |
| C | 1 | 757-4002-323 | PROCEDURE, MAX REMOTE JOG OPTION INSTALL | 5 |
| B2 | 3 | 108-5003-004 | BHCS, M 5 X 0.8 P X 12 LG | 4 |
| B1 | 1 | 614-0002-129 | BOX, 6" X 6" X 12", CARDBOARD | 3 |
| | 1 | 007-3017-001 | ASSY, DETENTED REMOTE JOG | 2 |
| | 1 | 807-0015-025 | BRACKET, REMOTE JOG | 1 |

| REV | E.C.N. NO. | REVISION DESCRIPTION | REV BY | DATE | CHK BY | DATE | APPD BY | DATE |
|---|---|---|---|---|---|---|---|---|
| C | 15505 | ITEMS 5 & 6 ADDED | JLW | 09-25 2002 | FWG | 9-25 2002 | PFB | 9-25 2002 |
| B | 15443 | (1) ITEM 3 WAS 110-0046-007, QTY 2; (2) ITEM 4 WAS 108-5004-002, QTY 2; | JLW | 07-18 2002 | FWG | 07-22 2002 | PFB | 07-22 2002 |
| A | 15371 | ORIGINAL RELEASE | | | | | | |

SURFACE TREATMENT

HEAT TREATMENT

FIRST USED ON: MAX

EXCEPT AS NOTED: ALL CORNERS MUST BE AS FOLLOWS
INSIDE: 1.3 X 45° OR 1.3 R MAX.
OUTSIDE: 0.8 X 45° OR 1.3 R

EXCEPT AS NOTED: ALL DIMENSIONS IN METRIC TOLERANCE
DECIMAL
.0 ±0.8
.00 ±0.4
.000 ±0.13
.0000 ±0.013
ANGULAR ±0°30'

EXCEPT AS NOTED: WELDING TOLERANCE MUST BE AS FOLLOWS
±3

THIRD ANGLE PROJECTION

HURCO COMPANIES, INC.
INDIANAPOLIS, IN U.S.A.

DESCRIPTION: KIT, OPTION, REMOTE JOG, MAX

| DRAWN | DATE | CHECKED | DATE | APPROVED | DATE |
|---|---|---|---|---|---|
| JLW | 12-4-01 | FWG | 12-6-01 | - | - |

| SCALE | SIZE | DRAWING | SHT | REV. |
|---|---|---|---|---|
| 1:2 | B | 007-0020-008 | 1 OF 1 | C |

UNIT OF MEAS.: EA.

| DRAWING | REV. | PROPRIETARY INFORMATION |
|---|---|---|
| 007-3003-009 | C | INFORMATION CONTAINED HEREIN IS THE PROPERTY OF HURCO MANUFACTURING COMPANY, INC. NO REPRODUCTION OR DISCLOSURE OF THIS INFORMATION SHALL BE MADE BY THE RECIPIENT TO ANY OTHER PERSON OR ORGANIZATION WITHOUT THE PRIOR WRITTEN CONSENT OF HURCO MANUFACTURING COMPANY, INC. |

EXCEPT AS NOTED:
ALL CORNERS MUST BE AS FOLLOWS

| INSIDE: | OUTSIDE: |
|---|---|
| .050'' X 45° OR .05'' R MAX | .030'' X 45° OR .05'' R |

## THIS ASSEMBLY CONSISTS OF THE FOLLOWING PARTS:

| | ITEM NO. | DWG. SZ. | PART NO. | DESCRIPTION: | QTY |
|---|---|---|---|---|---|
| | 1 | PPA | 415-0166-915 | PCB ASSY,635VL SOC370 PASS./BACKPLANE CPU | 1 |
| C | 2 | PPA | 450-0001-369 | IC, CELERON PROCESSOR, 850MHZ | 1 |
| | 3 | PPA | 420-0001-049 | FAN, CELERON CPU WITH HEATSINK | 1 |
| B | 4 | PPA | 415-0250-908 | PCB ASSY, PC-133, 128MB DIMM | 1 |
| | 5 | – | – | HARNESS, ISA PARALLEL PORT | 1 |
| | 6 | PPA | 406-1663-003 | ASSY, MINI-DIN TO DIN ADAPTER CABLE | 1 |
| | 7 | A | 757-4002-302 | PROCEDURE, NEXCOM P/B CPU BOARD SETUP | REF |

NOTES:

1) ASSEMBLE ITEMS 1 THROUGH 4 AND RETURN ASSEMBLY TO STATIC SHIELDING BAG.
2) ITEM 5 IS INCLUDED AS PART OF ITEM 1

| REV | ECN NO. | REVISION DESCRIPTION | REV BY | DATE | CHK BY | DATE | APPD BY | DATE | DF |
|---|---|---|---|---|---|---|---|---|---|
| C | 15412 | ITEM 3 WAS 450-0001-365 | WRS | 13 MAR 03 | FWG | 14 MAR 03 | FWG | 14 MAR 03 | |
| B | 15556 | WAS QTY 2 | FWG | 13 FEB 03 | FWG | 13 FEB 03 | FWG | 24 FEB 03 | |
| A | 15310 | REL | | | | | | | |

SURFACE TREATMENT

HEAT TREATMENT

FIRST USED ON
MAX 4

EXCEPT AS NOTED:
ALL DIMENSIONS IN INCHES
TOLERANCE
DECIMAL
.0 ±.0300
.00 ±.0150
.000 ±.0050
.0000 ±.0005
ANGULAR ±0°30'

THIRD ANGLE PROJECTION

HURCO MANUFACTURING COMPANY, INC.
INDIANAPOLIS, IN U.S.A.

DESCRIPTION
ASSY,PCI/ISA P/B SOC370 128M CPU

| DRAWN | DATE | CHECKED | DATE | APPROVED | DATE |
|---|---|---|---|---|---|
| P.E.S. | 9/19/01 | WRS | 9/19/01 | FWG | 9/19/01 |

| SCALE | SIZE | DRAWING | SHT. | REV. |
|---|---|---|---|---|
| NONE | A | 007-3003-009 | 1 OF 1 | C |
| UNIT OF MEAS. PC | | | | |

# Ass'y., Auger Utility Box, 410-2001-054—Rev. A

| SIZE | DRAWING | SHT. | REV. |
|---|---|---|---|
| D | 410-2001-054 | 1 OF 1 | A |

PROPRIETARY INFORMATION
INFORMATION CONTAINED HEREIN IS THE PROPERTY OF HURCO MANUFACTURING COMPANY, INC. NO REPRODUCTION OR DISCLOSURE OF THIS INFORMATION SHALL BE MADE BY THE RECIPIENT TO ANY OTHER PERSON OR ORGANIZATION WITHOUT THE PRIOR WRITTEN CONSENT OF HURCO MANUFACTURING COMPANY, INC.

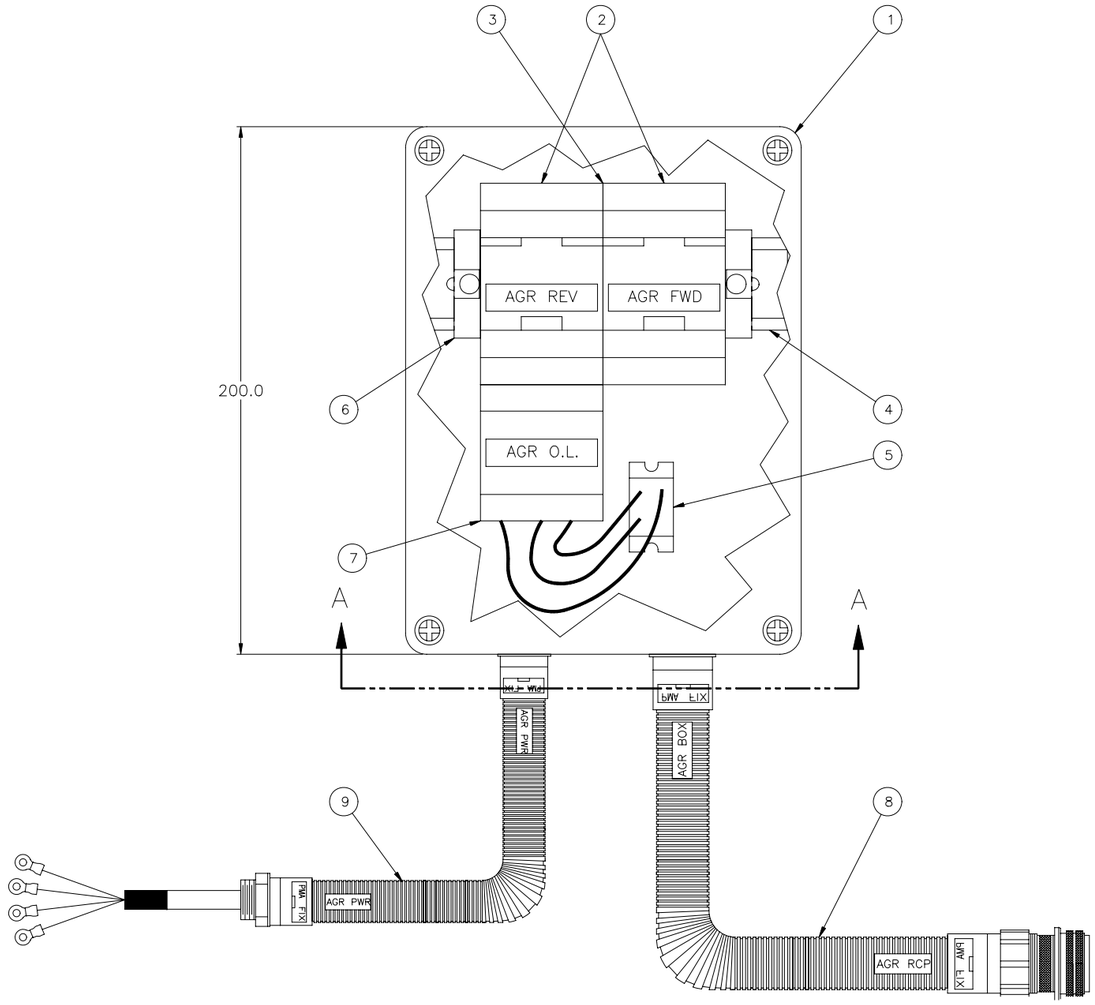


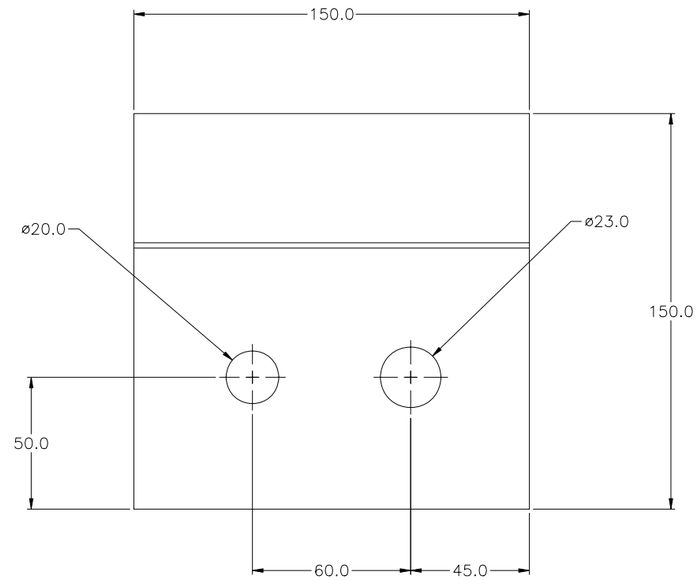


SECTION A—A
SCALE 1=1

| QTY. | PART NUMBER | ITEM DESCRIPTION | ITEM |
|---|---|---|---|
| 1 | 423-4401-784 | HARNESS, AUGER POWER | 9 |
| 1 | 423-4401-781 | HARNESS, RECEPTACLE, AUGER | 8 |
| 1 | 403-5503-032 | OVERLOAD RELAY, 0.9-1.25A | 7 |
| 2 | 406-4006-002 | END STOP, GRAY | 6 |
| 3 | 417-6001-011 | SUPPRESSOR, RC NETWORK | 5 |
| 120mm | 406-4007-002 | RAIL, DIN | 4 |
| 1 | 402-0003-016 | REVERSING SWITCH WIRING UNIT | 3 |
| 2 | 402-0003-014 | CONTACTOR, 3POLE, 24V COIL W/SURGE SUPPRESSOR | 2 |
| 1 | 410-2001-056 | TERMINAL BOX, 150 x 200 x 130 | 1 |

PARTS LIST

| REV | P.I.N. NO. | REVISION DESCRIPTION | REV BY | DATE | CHK BY | DATE | APPD BY | DATE | DF |
|---|---|---|---|---|---|---|---|---|---|
| A | 15497 | RELEASE | | | | | | | |

SURFACE TREATMENT

HEAT TREATMENT

FIRST USED ON
VM1

EXCEPT AS NOTED:
ALL CORNERS MUST BE AS FOLLOWS
INSIDE:
.050" X 45° OR .05" R MAX
OUTSIDE:
.030" X 45° OR .05" R

EXCEPT AS NOTED:
ALL DIMENSIONS IN INCHES
TOLERANCE
DECIMAL
.0 ±.0300
.00 ±.0150
.000 ±.0050
.0000 ±.0005
ANGULAR ± 0°30'

EXCEPT AS NOTED:
WELDING TOLERANCE MUST BE AS FOLLOWS
±.12

THIRD ANGLE PROJECTION

HURCO MANUFACTURING COMPANY, INC.
INDIANAPOLIS, IN U.S.A.

DESCRIPTION
ASS'Y, AUGER UTILITY BOX

| DRAWN | DATE | CHECKED | DATE | APPROVED | DATE |
|---|---|---|---|---|---|
| ROD | 5-14-02 | SJT | 5-28-02 | DEO | 5-29-02 |

| SCALE | SIZE | DRAWING | SHT. | REV. |
|---|---|---|---|---|
| NONE | D | 410-2001-054 | 1 OF 1 | A |

UNIT OF MEAS
EA

| SIZE | DRAWING | SHT. | REV. |
|---|---|---|---|
| D | 410-2001-055 | 1 OF 1 | B |

PROPRIETARY INFORMATION
INFORMATION CONTAINED HEREIN IS THE PROPERTY OF HURCO MANUFACTURING COMPANY, INC. NO REPRODUCTION OR DISCLOSURE OF THIS INFORMATION SHALL BE MADE BY THE RECIPIENT TO ANY OTHER PERSON OR ORGANIZATION WITHOUT THE PRIOR WRITTEN CONSENT OF HURCO MANUFACTURING COMPANY, INC.

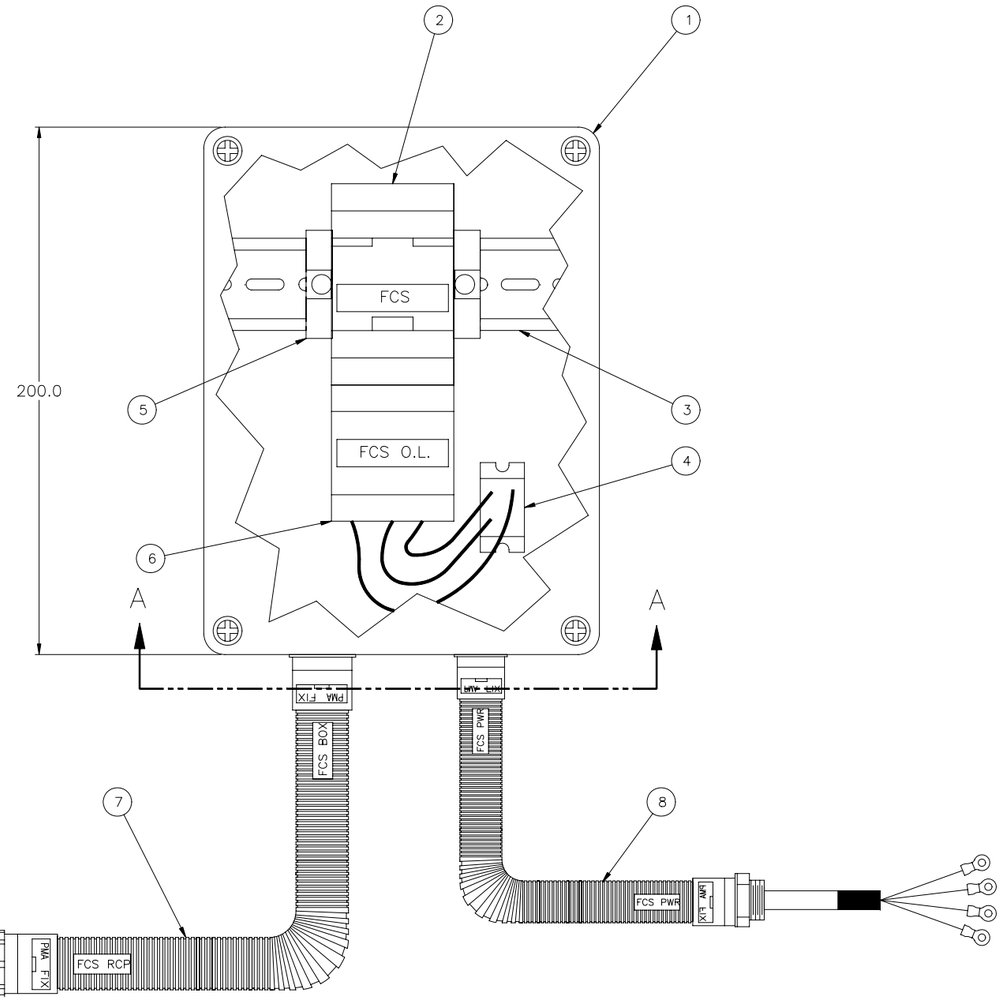


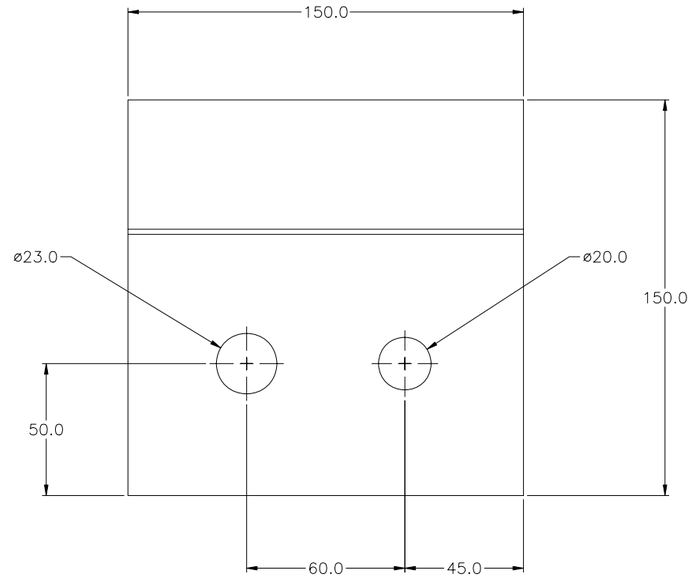


SECTION A—A
SCALE 1=1

| | QTY. | PART NUMBER | ITEM DESCRIPTION | ITEM |
|---|---|---|---|---|
| | PARTS LIST | | | |
| | 1 | 423-4401-785 | HERNESS, FLOOD POWER | 8 |
| | 1 | 423-4401-782 | HARNESS, RECEPTACLE, FLOOD | 7 |
| B | 1 | 403-5503-033 | OVERLOAD RELAY, 1.4-2.0A | 6 |
| | 2 | 406-4006-002 | END STOP, GRAY | 5 |
| | 3 | 417-6001-011 | SUPPRESSOR, RC NETWORK | 4 |
| | 120mm | 406-4007-002 | RAIL, DIN | 3 |
| | 1 | 402-0003-014 | CONTACTOR, 3POLE, 24V COIL W/SURGE SUPPRESSOR | 2 |
| | 1 | 410-2001-056 | TERMINAL BOX, 150 x 200 x 130 | 1 |

| REV | P.I.N. NO. | REVISION DESCRIPTION | REV BY | DATE | CHK BY | DATE | APPD BY | DATE | DF |
|---|---|---|---|---|---|---|---|---|---|
| B | 15788 | WAS 403-5503-032 | SMc | 11 8 2004 | PFB | 11 8 2004 | PFB | 11 8 2004 | |
| A | 15497 | RELEASE | | | | | | | |

SURFACE TREATMENT
HEAT TREATMENT
FIRST USED ON VM1

EXCEPT AS NOTED: ALL CORNERS MUST BE AS FOLLOWS
INSIDE: .050" X 45° OR .05" R MAX
OUTSIDE: .030" X 45° OR .05" R

EXCEPT AS NOTED: ALL DIMENSIONS IN INCHES TOLERANCE
DECIMAL .0 ±.0300, .00 ±.0150, .000 ±.0050, .0000 ±.0005
ANGULAR ± 0°30'

EXCEPT AS NOTED: WELDING TOLERANCE MUST BE AS FOLLOWS ±.12

THIRD ANGLE PROJECTION

HURCO MANUFACTURING COMPANY, INC.
INDIANAPOLIS, IN U.S.A.

DESCRIPTION: ASS'Y, FLOOD UTILITY BOX

| DRAWN | DATE | CHECKED | DATE | APPROVED | DATE |
|---|---|---|---|---|---|
| ROD | 5-14-02 | SJT | 5-28-02 | DEO | 5-29-02 |

| SCALE | SIZE | DRAWING | SHT. | REV. |
|---|---|---|---|---|
| NONE | D | 410-2001-055 | 1 OF 1 | B |

UNIT OF MEAS: EA

| SIZE | DRAWING | SHT. | REV. | PROPRIETARY INFORMATION |
|---|---|---|---|---|
| C | 803-0121-010 | 1 OF 1 | A | INFORMATION CONTAINED HEREIN IS THE PROPERTY OF HURCO COMPANIES, INC. NO REPRODUCTION OR DISCLOSURE OF THIS INFORMATION SHALL BE MADE BY THE RECIPIENT TO ANY OTHER PERSON OR ORGANIZATION WITHOUT THE PRIOR WRITTEN CONSENT OF HURCO COMPANIES, INC. |

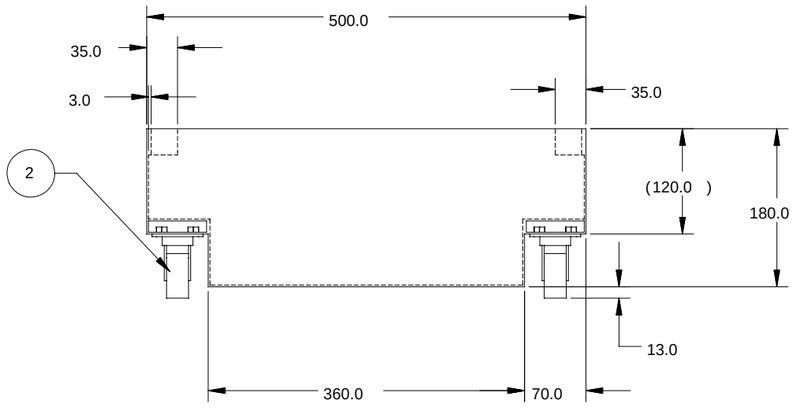


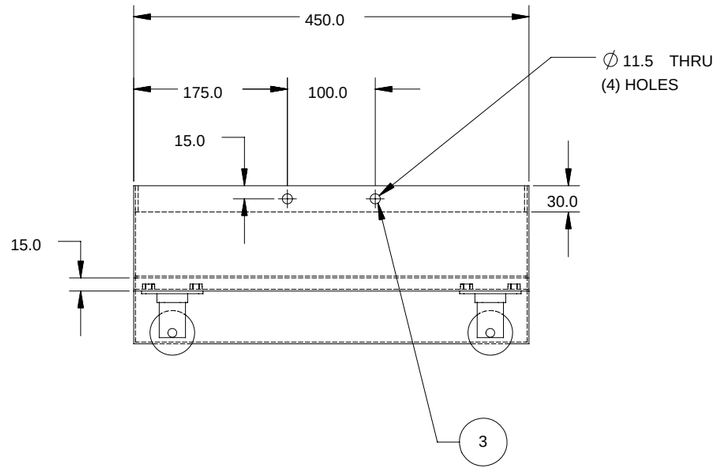


NOTES:

1. CLEAN, PRIME WITH 701-0002-008 GRAY PRIMER.
   PAINT WITH HURCO BLACK 701-0001-074.
   SEE HURCO PAINT SPECIFICATION 716-7025-001.
   EXCEPT AS NOTED, SURFACE FINISH CLASS "B".
2. FILE ALL SHARP CORNERS & EDGES PRIOR TO
   SURFACE TREATMENT.

PARTS LIST

| QTY | PART NUMBER | ITEM DESCRIPTION | ITEM |
|---|---|---|---|
| 2 | 603-0521-045 | HANDLE | 3 |
| 4 | | CASTER, 2" DIA | 2 |
| | | 2.0 mm (.079") THICK 1020 H.R. | 1 |

| REV | E.C.N. NO. | REVISION DESCRIPTION | REV BY | DATE | CHK BY | DATE | APPD BY | DATE |
|---|---|---|---|---|---|---|---|---|
| A | 15484 | ORIGINAL RELEASE | | | | | | |

SURFACE TREATMENT: SEE NOTE 1

HEAT TREATMENT: NONE

FIRST USED ON: VM1

EXCEPT AS NOTED: ALL CORNERS MUST BE AS FOLLOWS
INSIDE: 1.3 X 45° OR 1.3 R MAX
OUTSIDE: 0.8 X 45° OR 1.3 R

EXCEPT AS NOTED: WELDING TOLERANCE MUST BE AS FOLLOWS ±3

EXCEPT AS NOTED: ALL DIMENSIONS IN METRIC TOLERANCE
DECIMAL .0 ±0.8 .00 ±0.4 .000 ±0.13 .0000 ±0.013 ANGULAR ±0°30'

THIRD ANGLE PROJECTION

HURCO

HURCO COMPANIES, INC
INDIANAPOLIS, IN. U.S.A.

DESCRIPTION: CART, CHIP

| DRAWN | DATE | CHECKED | DATE | APPROVED | DATE |
|---|---|---|---|---|---|
| Kevin | 04-25-02 | MLE | 04-30-02 | JLW | 09-19-02 |

| SCALE | SIZE | DRAWING | SHT. | REV. |
|---|---|---|---|---|
| 1:4 | C | 803-0121-010 | 1 OF 1 | A |

UNIT OF MEAS.: PC

| SIZE | DRAWING | SHT. | REV. |
|---|---|---|---|
| C | 803-1036-013 | 1 OF 1 | C |

PROPRIETARY INFORMATION
INFORMATION CONTAINED HEREIN IS THE PROPERTY OF HURCO MANUFACTURING COMPANY, INC. NO REPRODUCTION OR DISCLOSURE OF THIS INFORMATION SHALL BE MADE BY THE RECIPIENT TO ANY OTHER PERSON OR ORGANIZATION WITHOUT THE PRIOR WRITTEN CONSENT OF HURCO MANUFACTURING COMPANY, INC.

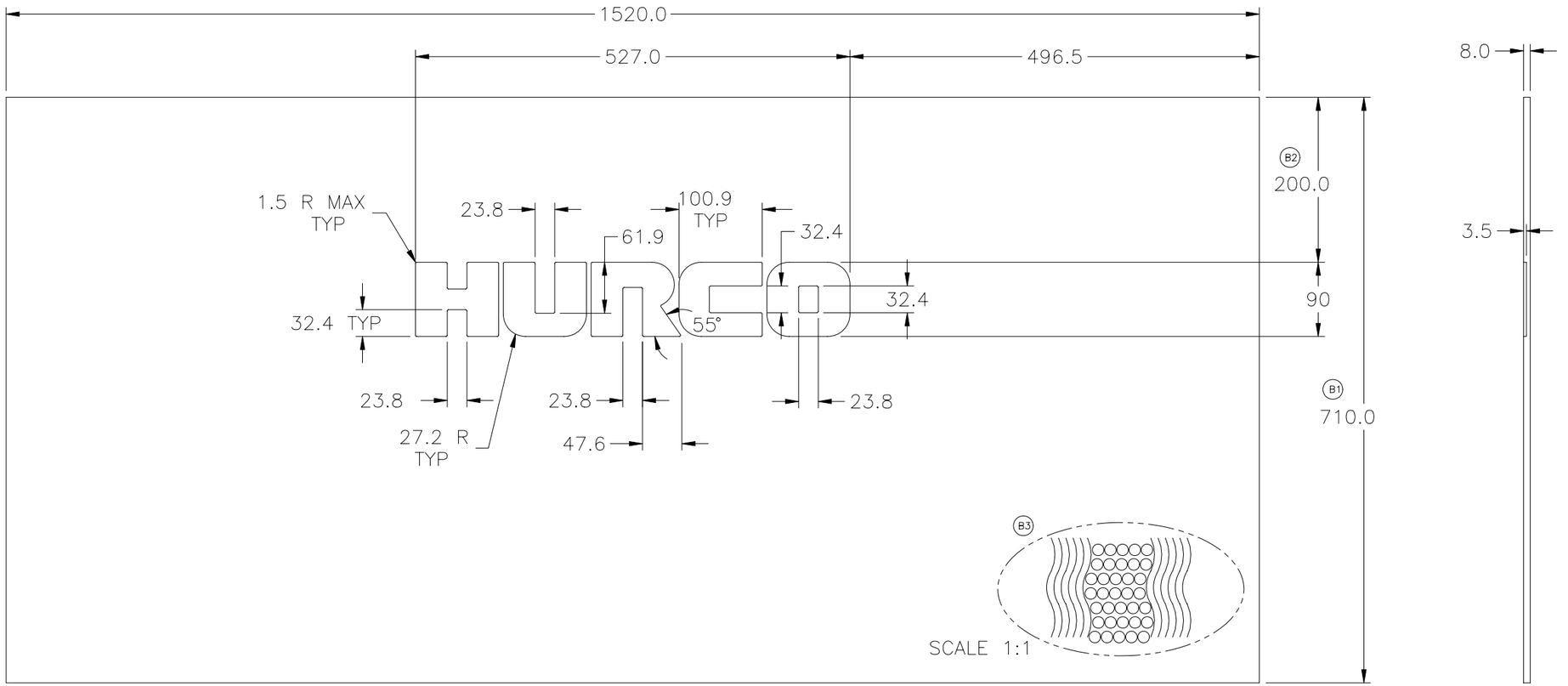


| QTY. | PART NUMBER | ITEM DESCRIPTION | ITEM |
|---|---|---|---|
| | | STRESS RELIEF MAT. (SEE SAMPLE) | |

PARTS LIST

| REV | E.C.N. NO. | REVISION DESCRIPTION | REV BY | DATE | CHK BY | DATE | APPD BY | DATE | DF |
|---|---|---|---|---|---|---|---|---|---|
| C | 15559 | CORRECTED HURCO LOGO & ADDED DIMS. | GLH | 2 17 03 | PFB | 2 17 03 | | | |
| B | 15163 | (1) WAS 775; (2) WAS 210; (3) WAS USA PATTERN | MLE | 03 02 01 | | | | | |
| A | 15184 | REL | | | | | | | |

SURFACE TREATMENT

HEAT TREATMENT

FIRST USED ON
VMX/VSX24
30,40,50,64

EXCEPT AS NOTED:
ALL CORNERS MUST BE AS FOLLOWS
INSIDE:
1.3 X 45° OR
1.3 R MAX
OUTSIDE:
0.8 X 45° OR
1.3 R

EXCEPT AS NOTED:
WELDING TOLERANCE MUST BE AS FOLLOWS
±3

EXCEPT AS NOTED:
ALL DIMENSIONS IN METRIC TOLERANCE

| DECIMAL | |
|---|---|
| .0 | ±0.8 |
| .00 | ±0.4 |
| .000 | ±0.13 |
| .0000 | ±0.013 |
| ANGULAR | ± 0°30' |

THIRD ANGLE PROJECTION

HURCO MANUFACTURING COMPANY, INC.
INDIANAPOLIS, IN U.S.A.

DESCRIPTION
MAT, MACHINE FRONT FLOOR

| DRAWN | DATE | CHECKED | DATE | APPROVED | DATE |
|---|---|---|---|---|---|
| M.LEE | 12-18-00 | | | | |

| SCALE | SIZE | DRAWING | SHT. | REV. |
|---|---|---|---|---|
| 1=4 | C | 803-1036-013 | 1 OF 1 | C |

UNIT OF MEAS. EA

# Record of Changes—VM1 Machining Center

704-0212-303, Rev A, December 2005, ECN 15925
Revised by: K. Gross
Approved by: P. Baechle, F. Gross, D. Ornelas, D. Skrzypczak December, 2005
Update for VM1 Machining Center Listing and Wiring Diagrams Manual, 704-0212-302

| Number of drawings that have been added to this version: |
|---|
| • 58 |

| Number of drawings that have been revised for this version: |
|---|
| • 28 |

| Number of drawings that have been deleted for this version: |
|---|
| • 10 |

# Part Number Index


002-4303-012—Rev. A *5 - 2*
002-4403-038—Rev. D *4 - 3*
002-4403-039—Rev. C *4 - 4*
002-4421-012—Rev. A *2 - 2*
003-0100-001—Rev. G *1 - 2*, *1 - 3*, *1 - 4*
003-0100-002—Rev. G *1 - 2*, *1 - 3*, *1 - 4*
003-0100-003—Rev. G *1 - 2*, *1 - 3*, *1 - 4*
003-0100-004—Rev. G *1 - 5*, *1 - 6*, *1 - 7*
003-0100-006—Rev. G *1 - 5*, *1 - 6*, *1 - 7*
003-0101-001—Rev. A *1 - 8*
003-0101-003—Rev. A *1 - 9*, *1 - 10*
003-0101-004—Rev. D *5 - 27*
003-0101-005—Rev. B *5 - 28*
003-0101-006—Rev. A *1 - 11*
003-0101-007—Rev. A *1 - 12*
003-0101-008—Rev. C *5 - 29*
003-0101-010—Rev. B *1 - 13*
003-0101-011—Rev. B *1 - 14*
003-0101-012—Rev. A *1 - 15*
003-0101-015—Rev. A *1 - 16*
003-0101-016—Rev. A *3 - 2*
003-0101-017—Rev. A *3 - 3*
003-0101-018—Rev. A *3 - 4*
003-0101-019—Rev. A *1 - 16*
003-0101-020—Rev. A *1 - 17*, *1 - 18*
003-0101-021—Rev. C *5 - 30*, *5 - 31*
003-0102-001—Rev. A *1 - 19*
003-0102-002—Rev. A *1 - 20*, *1 - 21*
003-0102-003—Rev. B *1 - 22*, *1 - 23*
003-0102-005—Rev. C *5 - 32*
003-0102-007—Rev. A *1 - 24*
003-0102-008—Rev. A *1 - 25*, *1 - 26*
003-0102-009—Rev. A *5 - 10*, *5 - 33*
003-0102-013—Rev. A *5 - 34*
003-0103-001—Rev. C *1 - 27*
003-0103-002—Rev. D *1 - 28*, *1 - 29*
003-0103-003—Rev. C *1 - 30*
003-0104-001—Rev. A *1 - 31*
003-0104-002—Rev. A *1 - 32*
003-0104-004—Rev. B *1 - 33*
003-0105-001—Rev. A *1 - 34*
003-0105-002—Rev. A *1 - 35*
003-0105-003—Rev. A *1 - 36*
003-0105-005—Rev. C *1 - 37*
003-0105-010—Rev. A *1 - 38*
003-0105-011—Rev. A *1 - 39*
003-0105-012—Rev. A *1 - 40*
003-0105-014—Rev. A *1 - 41*
003-0106-001—Rev. A *1 - 42*
003-0106-002—Rev. C *1 - 43*
003-0106-003—Rev. B *1 - 44*
003-0106-005—Rev. C *1 - 45*, *1 - 46*, *1 - 47*
003-0106-006—Rev. A *1 - 48*, *5 - 35*
003-0106-008—Rev. A *1 - 49*
003-0106-009—Rev. A *1 - 50*
003-0106-010—Rev. B *1 - 51*
003-0107-001—Rev. A *1 - 52*, *1 - 53*
003-0107-002—Rev. C *1 - 54*
003-0108-001—Rev. E *5 - 36*, *5 - 37*
003-0108-002—Rev. C *5 - 38*
003-0108-004—Rev. B *5 - 39*
003-0208-006—Rev. A *5 - 40*
003-1003-001—Rev. C *1 - 55*
003-1007-048—Rev. F *2 - 3*, *2 - 4*, *2 - 5*, *2 - 6*
003-1007-049—Rev. F *2 - 3*, *2 - 4*, *2 - 5*, *2 - 6*
003-1007-050—Rev. F *2 - 3*, *2 - 4*, *2 - 5*, *2 - 6*
003-1007-059—Rev. F *2 - 3*, *2 - 4*, *2 - 5*, *2 - 6*
003-1015-027—Rev. C *1 - 56*, *1 - 57*
003-2022-011—Rev. J *3 - 19*
003-2022-011—Rev. K *3 - 5*, *3 - 6*, *3 - 7*, *3 - 8*, *3 - 9*, *3 - 10*, *3 - 11*, *3 - 12*, *3 - 13*, *3 - 14*, *3 - 15*, *3 - 16*, *3 - 17*, *3 - 18*, *3 - 20*
003-2022-019—Rev. C *5 - 11*, *5 - 12*, *5 - 13*, *5 - 14*, *5 - 15*, *5 - 16*, *5 - 17*, *5 - 18*
007-0012-003—Rev. D *2 - 7*
007-0020-007—Rev. B *5 - 41*
007-0020-008—Rev. C *5 - 42*
007-3002-011—Rev. T *2 - 8*
007-3002-012—Rev. T *2 - 8*
007-3002-030—Rev. T *2 - 8*
007-3002-034—Rev. A *2 - 9*
007-3002-035—Rev. A *2 - 9*
007-3002-036—Rev. A *2 - 9*
007-3003-009—Rev. C *5 - 43*
007-3004-005—Rev. D *2 - 10*
007-3005-018—Rev. H *2 - 11*
007-3005-054—Rev. C *2 - 12*
007-3005-056—Rev. C *2 - 13*
007-3005-058—Rev. A *2 - 14*
007-3005-059—Rev. A *2 - 15*
007-3005-061—Rev. A *2 - 16*
007-3015-002—Rev. D *2 - 17*, *2 - 18*, *2 - 19*
007-3016-001—Rev. C *2 - 20*
007-3017-001—Rev. D *2 - 21*
007-3022-008—Rev. B *5 - 19*
007-3022-017—Rev. B *5 - 20*, *5 - 21*
007-3022-018—Rev. B *5 - 22*
007-3022-019—Rev. A *5 - 23*
007-3022-020—Rev. A *5 - 24*
007-3022-021—Rev. B *5 - 25*
007-3022-022—Rev. A *5 - 26*

410-2001-054—Rev. A *5 - 44*
410-2001-055—Rev. B *5 - 45*
423-4400-002—Rev. B *4 - 5*, *5 - 3*
423-4400-006—Rev. B *4 - 6*, *5 - 4*
423-4400-011—Rev. B *5 - 5*
423-4401-172—Rev. A *4 - 7*
423-4401-173—Rev. B *4 - 8*
423-4401-174—Rev. A *4 - 9*
423-4401-175—Rev. B *4 - 10*
423-4401-176—Rev. B *4 - 11*
423-4401-177—Rev. B *4 - 12*
423-4401-178—Rev. D *4 - 13*
423-4401-179—Rev. C *4 - 14*
423-4401-180—Rev. G *4 - 15*, *4 - 16*
423-4401-186—Rev. A *4 - 17*
423-4401-240—Rev. A *4 - 18*
423-4401-721—Rev. A *4 - 19*
423-4401-722—Rev. A *4 - 20*
423-4401-723—Rev. A *4 - 21*
423-4401-724—Rev. A *4 - 22*
423-4401-725—Rev. A *4 - 23*
423-4401-726—Rev. A *4 - 24*
423-4401-727—Rev. A *4 - 25*
423-4401-728—Rev. A *4 - 26*
423-4401-729—Rev. A *4 - 27*
423-4401-730—Rev. A *4 - 28*
423-4401-731—Rev. A *4 - 29*
423-4401-732—Rev. A *4 - 30*
423-4401-733—Rev. A *4 - 31*
423-4401-734—Rev. A *4 - 32*
423-4401-735—Rev. B *4 - 33*
423-4401-736—Rev. A *4 - 34*
423-4401-737—Rev. A *4 - 35*
423-4401-738—Rev. A *4 - 36*
423-4401-739—Rev. A *4 - 37*
423-4401-740—Rev. A *4 - 38*
423-4401-741—Rev. A *4 - 39*
423-4401-749—Rev. A *4 - 40*
423-4401-750—Rev. B *4 - 41*
423-4401-751—Rev. B *4 - 42*
423-4401-752—Rev. A *4 - 43*
423-4401-753—Rev. A *4 - 44*
423-4401-754—Rev. A *4 - 44*
423-4401-755—Rev. A *4 - 44*
423-4401-756—Rev. A *4 - 45*
423-4401-757—Rev. A *4 - 45*
423-4401-758—Rev. A *4 - 45*
423-4401-759—Rev. A *4 - 46*
423-4401-760—Rev. A *4 - 47*
423-4401-761—Rev. A *4 - 47*
423-4401-762—Rev. B *4 - 48*
423-4401-763—Rev. A *4 - 49*
423-4401-764—Rev. B *4 - 50*
423-4401-765—Rev. B *4 - 50*
423-4401-767—Rev. A *4 - 51*
423-4401-768—Rev. B *4 - 52*
423-4401-791—Rev. B *4 - 53*
423-4401-793—Rev. A *4 - 54*
423-4401-822—Rev. B *4 - 55*
423-4401-865—Rev. B *4 - 56*
423-4401-866—Rev. A *4 - 57*
423-4401-922—Rev. B *5 - 6*
423-4401-923—Rev. B *5 - 7*
423-4401-933—Rev. C *5 - 8*
423-4401-934—Rev. B *5 - 9*
423-4401-955—Rev. A *4 - 58*
423-4401-984—Rev. B *4 - 59*
423-4401-993—Rev. A *4 - 60*
423-4401-996—Rev. A *4 - 61*
423-4401-997—Rev. A *4 - 62*
423-4405-111—Rev. C *4 - 63*
423-4405-259—Rev. A *4 - 64*
423-4405-260—Rev. A *4 - 65*
803-0121-010—Rev. A *5 - 46*
803-1036-013—Rev. C *5 - 47*